M54 Schematic Documentation

Project: BladeCore Board: M54 Variant: E Rev 1.0.0 2026-02-07

CONTENT

Page	Index
1	Cover Page
2	Block Diagram
3	Project Architecture
4	Microcontroller Peripherals
5	Microcontroller
6	Ethernet Interface
7	USB Interface and Power
8	Power - Sequencing
9	Revision History
10	.....
11	.....
12	.....
13	.....
14	.....
15	.....
16	.....
17	.....
18	.....
19	.....
20	.....

PCB PREVIEW

TOP VIEW

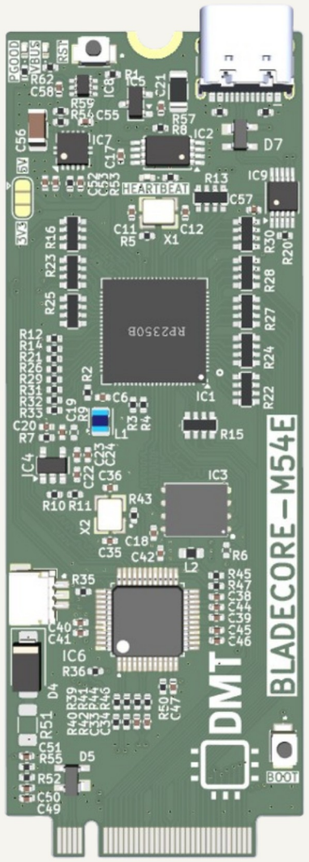

BOTTOM VIEW

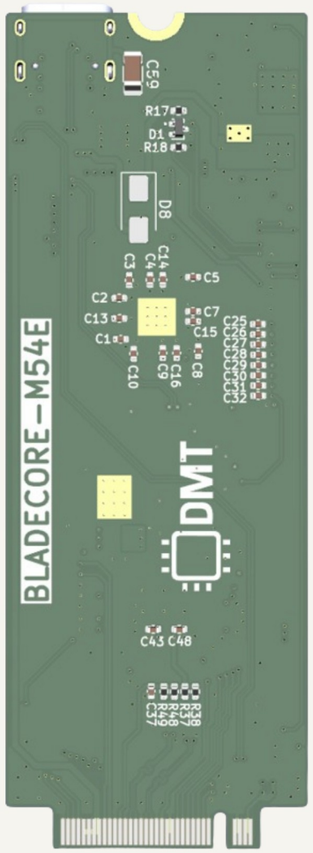

COMMENT GUIDELINES

General comments are black, 50 mil size
Design notes and guidelines are blue, 50 mil size
Layout instructions are red, 50 mil size

NOTES

Not fitted components are marked as X

DMT Date: 2026-01-31	Board Name: BladeCore		Project Name: M54
	File Name: BladeCore-M54E.kicad_sch		Revision: 1.0.0 / Variant: E
Sheet Title: Root	Company: DvidMakesThings	Designer: David Sipos Reviewer:	Size: A3 / Sheet: 1 of 9

[2] Block Diagram

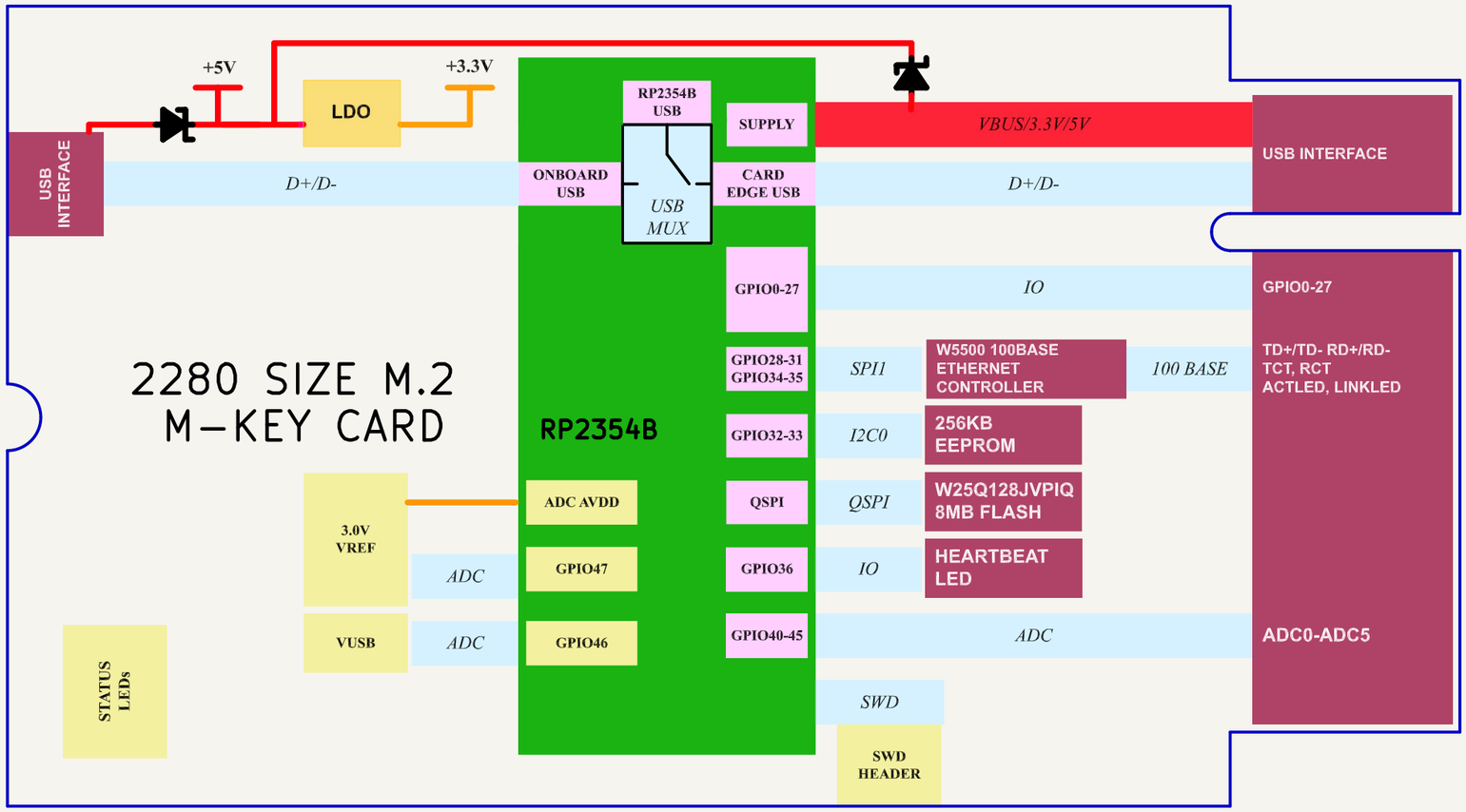

Electrical specifications:

Input voltage:	3.3V - 5.5 V
Absolut maximum current consumption	480 mA
Typical current consumtion	60mA
IO voltage	3.3V
Onboard LDO output capacity	1.5A
LDO Dropout	60mV
EEPROM	256 kbit
External Flash	8MB

DMT	Board Name: **BladeCore**		Project Name: **M54**
Date: 2026-01-31	File Name: Block Diagram.kicad_sch		Revision: 1.0.0 / Variant: E
Sheet Title: Block Diagram	Company: **DvidMakesThings**	Designer: David Sipos / Reviewer:	Size: **A3** / Sheet: **2** of **9**

[3] Project Architecture

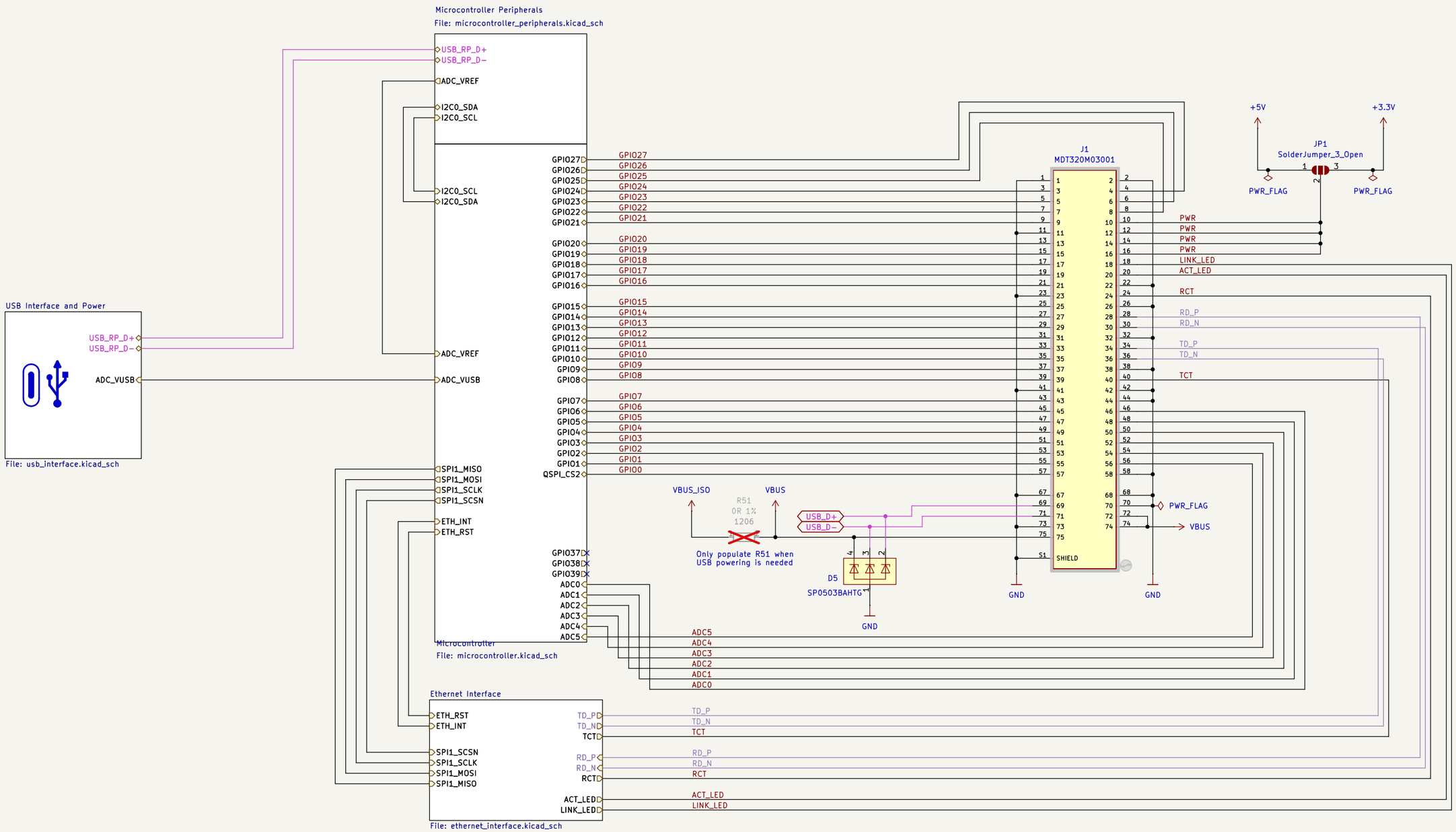

DMT Date: 2026-01-31	Board Name: **BladeCore**		Project Name: **M54**
	File Name: Project Architecture.kicad_sch		Revision: 1.0.0 / Variant: E
Sheet Title: Project Architecture	Company: **DvidMakesThings**	Designer: David Sipos Reviewer:	Size: **A3** / Sheet: **3** of **9**

[4] Microcontroller Peripherals

RP2354B MICROCONTROLLER

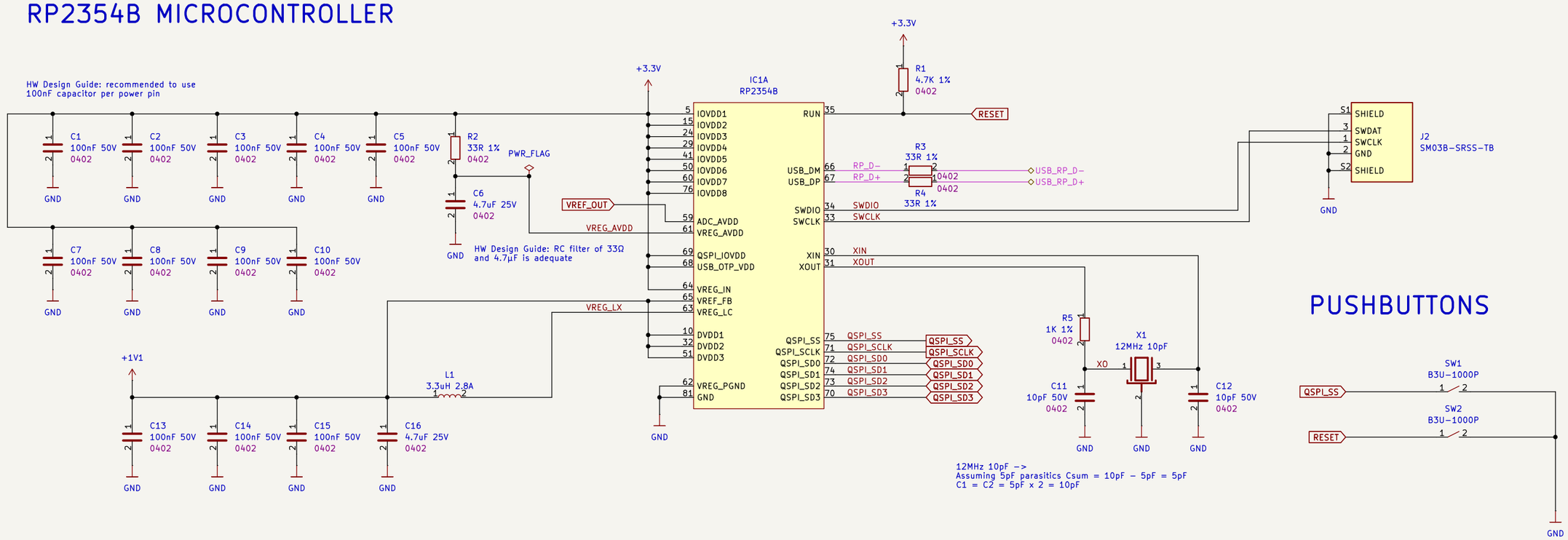

PUSHBUTTONS

3.0V ADC VOLTAGE REFERENCE

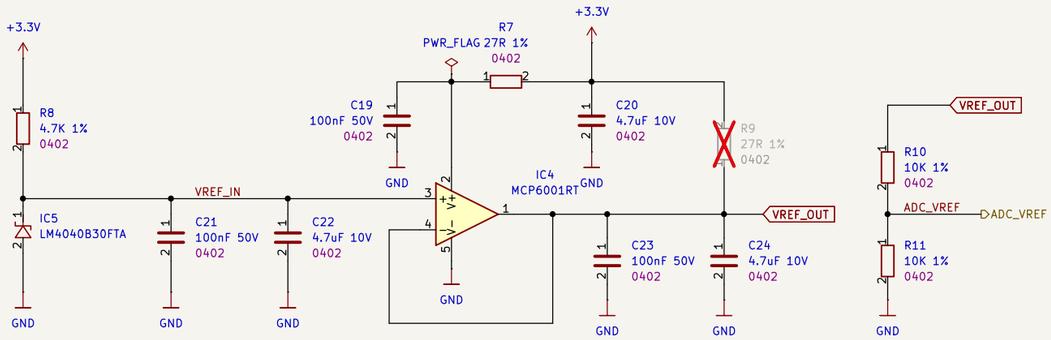

EXTERNAL EEPROM

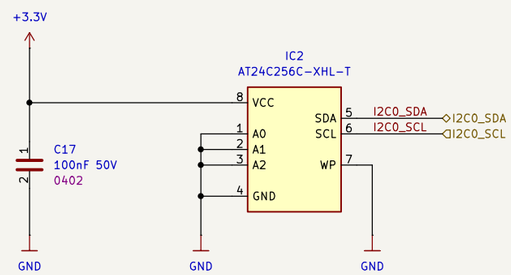

EXTERNAL FLASH

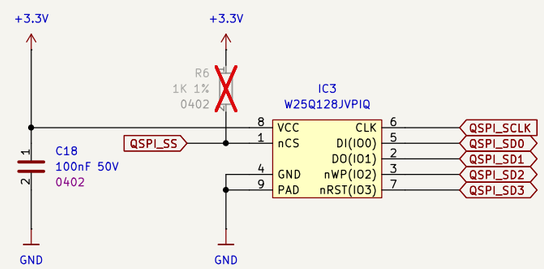

DMT Date: 2026-01-31	Board Name: **BladeCore**		Project Name: **M54**
	File Name: microcontroller_peripherals.kicad_sch		Revision: 1.0.0 / Variant: E
Sheet Title: Microcontroller Peripherals	Company: **DvidMakesThings**	Designer: David Sipos Reviewer:	Size: **A3** / Sheet: **4** of **9**

[5] Microcontroller

I2C PULLUP

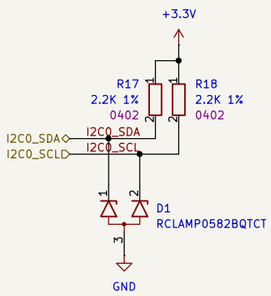

RP2354B GPIO ASSIGNMENT

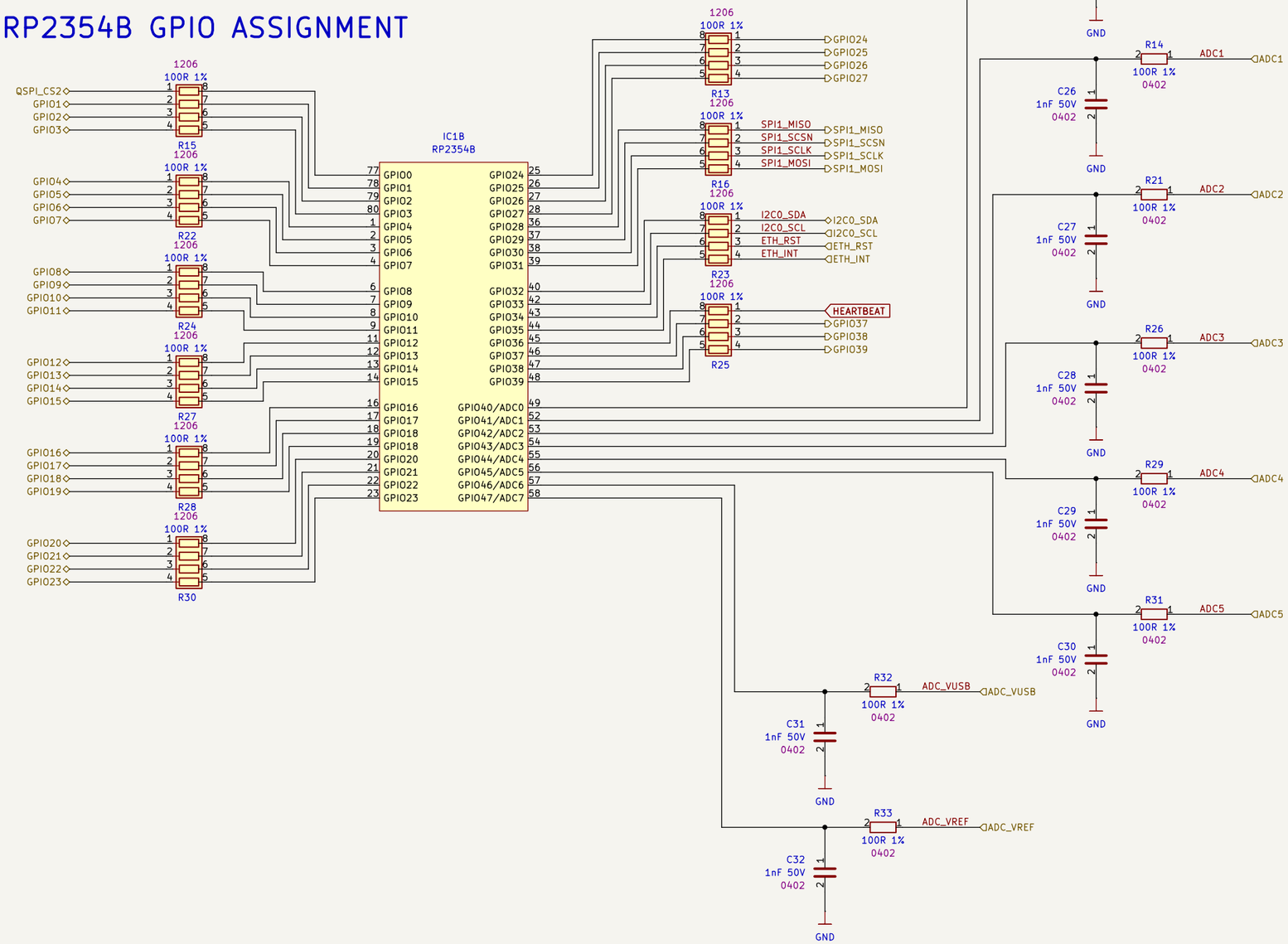

HEARTBEAT LED

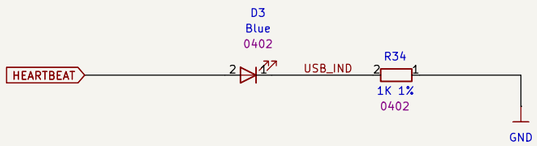

DMT Date: 2026-01-31	Board Name: **BladeCore**		Project Name: **M54**
	File Name: microcontroller.kicad_sch		Revision: 1.0.0 / Variant: E
Sheet Title: Microcontroller	Company: **DvidMakesThings**	Designer: David Sipos Reviewer:	Size: **A3** / Sheet: **5** of **9**

[6] Ethernet Interface

W5500 ETHERNET CONTROLLER WITH PHY

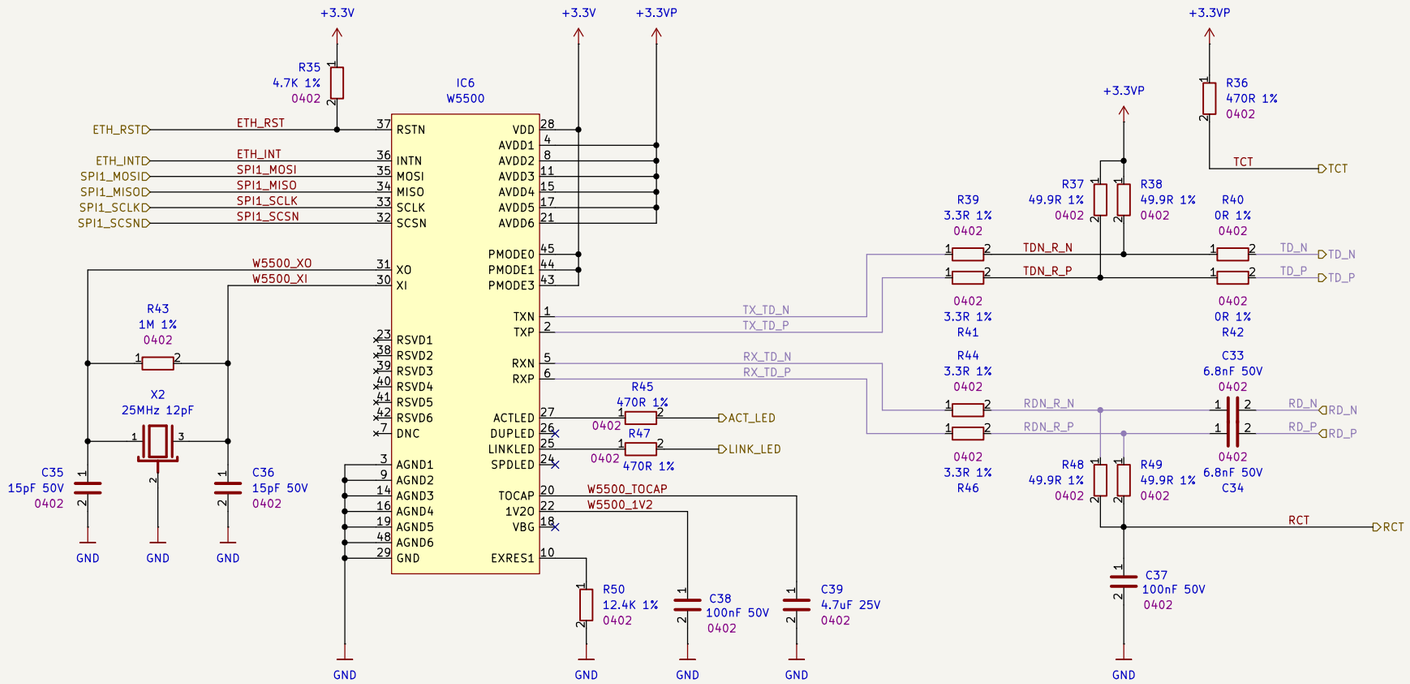

DECOUPLING

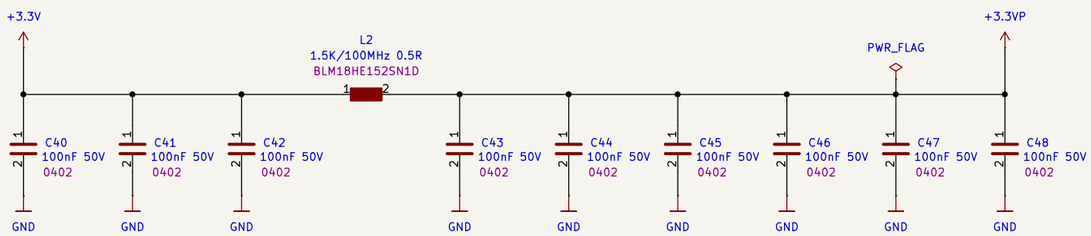

DMT Date: 2026-01-31	Board Name: **BladeCore**		Project Name: **M54**
	File Name: ethernet_interface.kicad_sch		Revision: 1.0.0 / Variant: E
Sheet Title: Ethernet Interface	Company: **DvidMakesThings**	Designer: David Sipos Reviewer:	Size: **A3** / Sheet: **6** of **9**

[7] USB Interface and Power

+5V to 3.3V PMIC

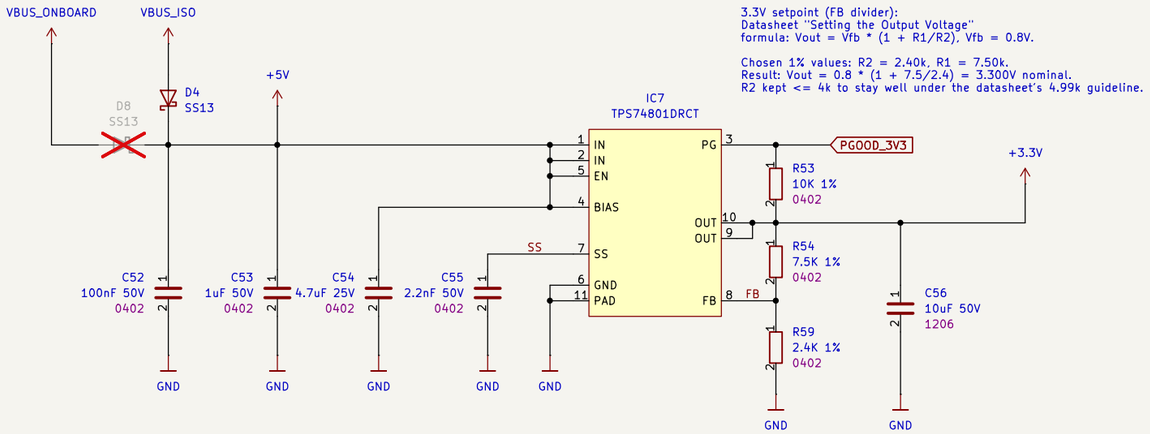

PGOOD LOGIC

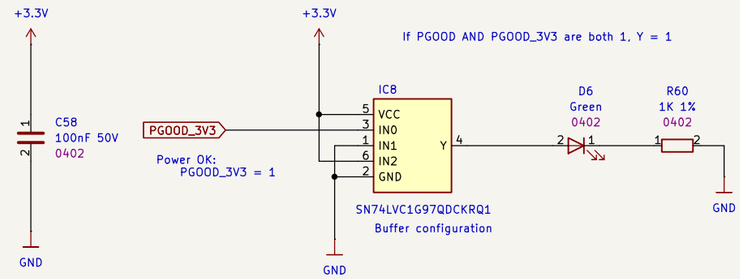

ONBOARD USB CONNECTOR

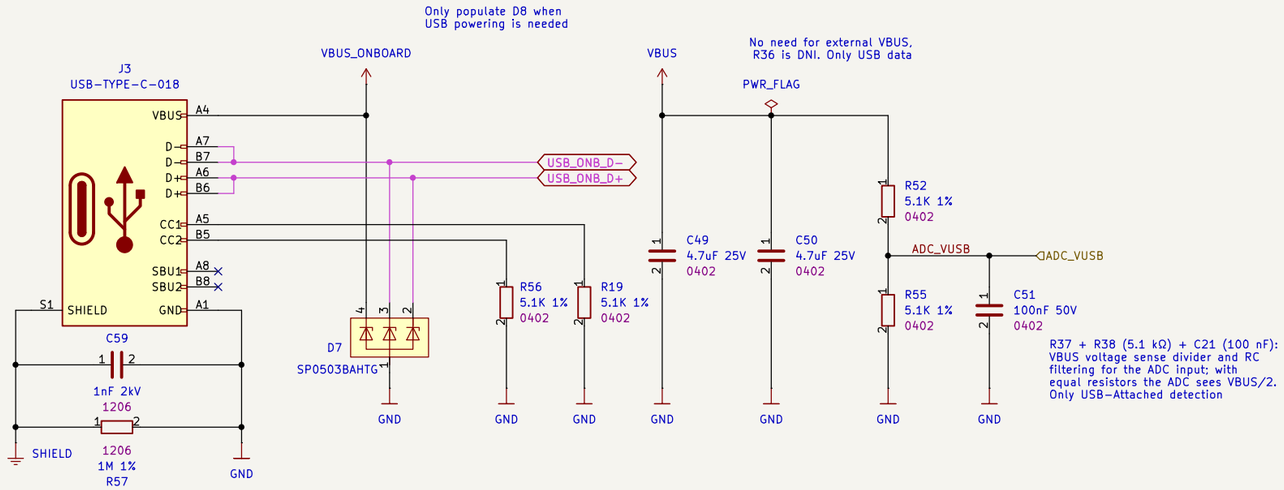

USB DATA-PATH SELECTOR

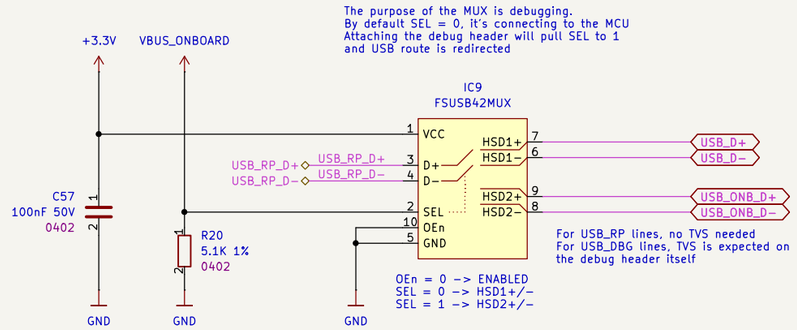

USB INDICATOR LED

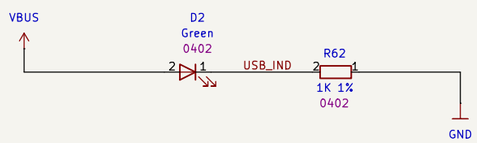

DMT Date: 2026-01-31	Board Name: **BladeCore**		Project Name: **M54**	
	File Name: usb_interface.kicad_sch		Revision: 1.0.0	Variant: E
Sheet Title: USB Interface and Power	Company: **DvidMakesThings**	Designer: David Sipos Reviewer:	Size: **A3**	Sheet: **7** of **9**

[8] Power - Sequencing

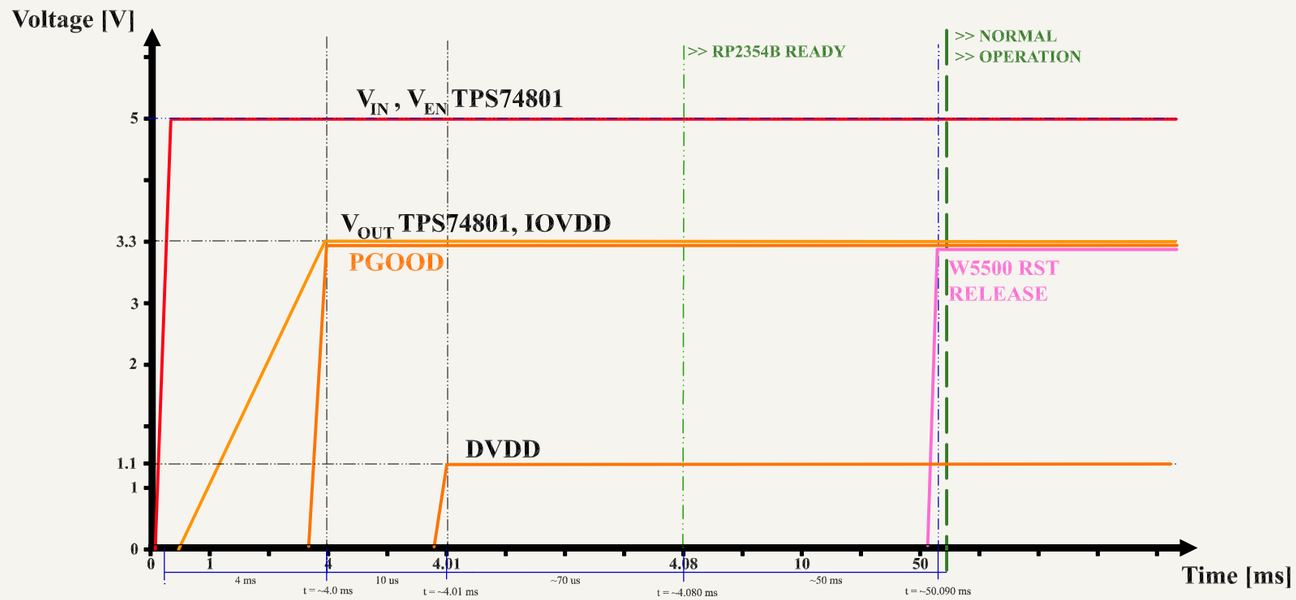

#	Stage	Δt	Total elapsed
1	VIN applied (5.0V)	0	0.000 ms
2	VEN high (TPS74801 EN)	0	0.000 ms
3	VOUT = 3.3V (soft-start)	4.000 ms	4.000 ms
4	PGOOD valid	0	4.000 ms
5	RP2354B 3.3V present	0	4.000 ms
6	RP2354B 1.1V valid (POR)	0.010 ms	4.010 ms
7	RP2354B ready	0.080 ms	4.090 ms
8	W5500 ready	50.000 ms	54.090 ms

[9] Revision History

DATE	REVISION	RESPONSIBLE	CHANGE
31.01.2026	1.0.0	DMT	INITIAL CREATION

DMT Date: 2026-01-31	Board Name: **BladeCore**		Project Name: **M54**	
	File Name: Revision History.kicad_sch		Revision: 1.0.0	Variant: E
Sheet Title: Revision History	Company: **DvidMakesThings**	Designer: David Sipos Reviewer:	Size: **A3**	Sheet: **9** of **9**