Baseboard Schematic Documentation

Project: PDNode-600 Name: Baseboard Var: Rev 1.0.0 2026-02-15

CONTENT

Page	Index
1	Cover Page
2	Block Diagram
3	Project Architecture
4	System Power
5	BladeCore-M54
6	USB Interface and Display
7	TCA9548 Port Controller
8	PDCard Connectors 1-4
9	PDCard Connectors 5-8
10	PDC Signals
11	USB-A Outputs
12	USB-A Current Measurement
13	External Power Connectors
14	Power - Sequencing
15	Revision History
16	.....
17	.....
18	.....
19	.....
20	.....

PCB PREVIEW

TOP VIEW

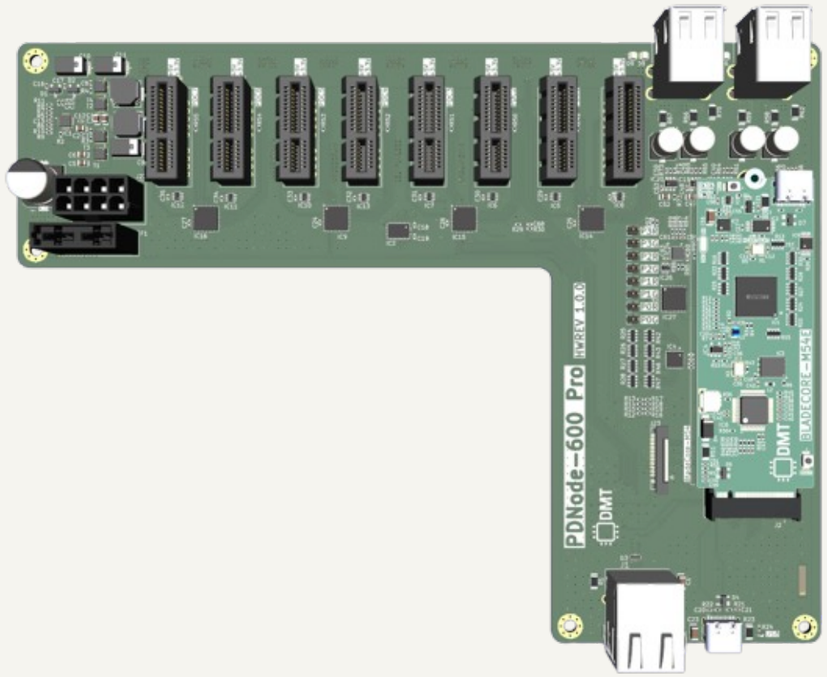

BOTTOM VIEW

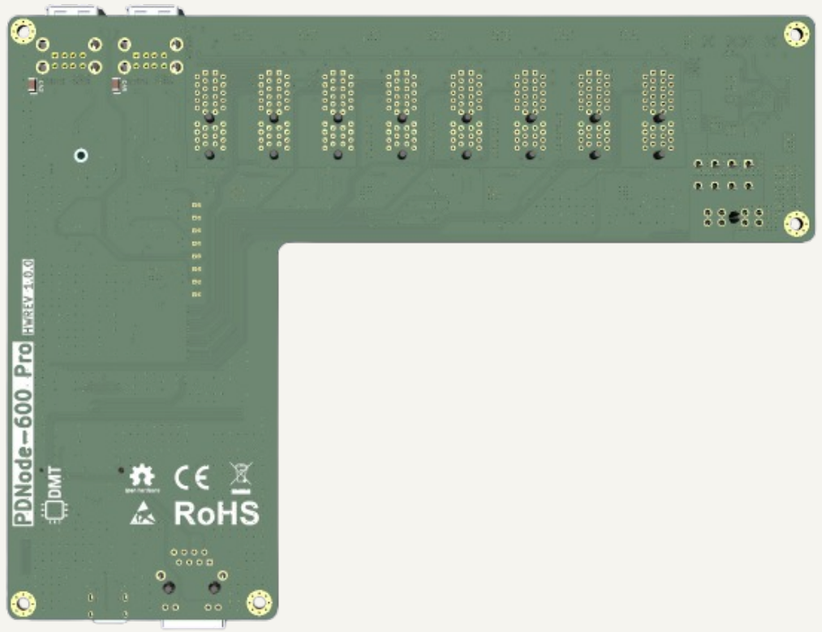

COMMENT GUIDELINES

General comments are black, 50 mil size
Design notes and guidelines are blue, 50 mil size
Layout instructions are red, 50 mil size

NOTES

Not fitted components are marked as ✗

DMT Date: 2025-01-12	Board Name: PDNode-600		Project Name: Baseboard
	File Name: PDNode_Baseboard.kicad_sch		Revision: 1.0.0 / Variant:
Sheet Title: PDNode_Baseboard	Company: DvidMakesThings	Designer: David Sipos Reviewer:	Size: A3 / Sheet: 1 of 15

[2] Block Diagram

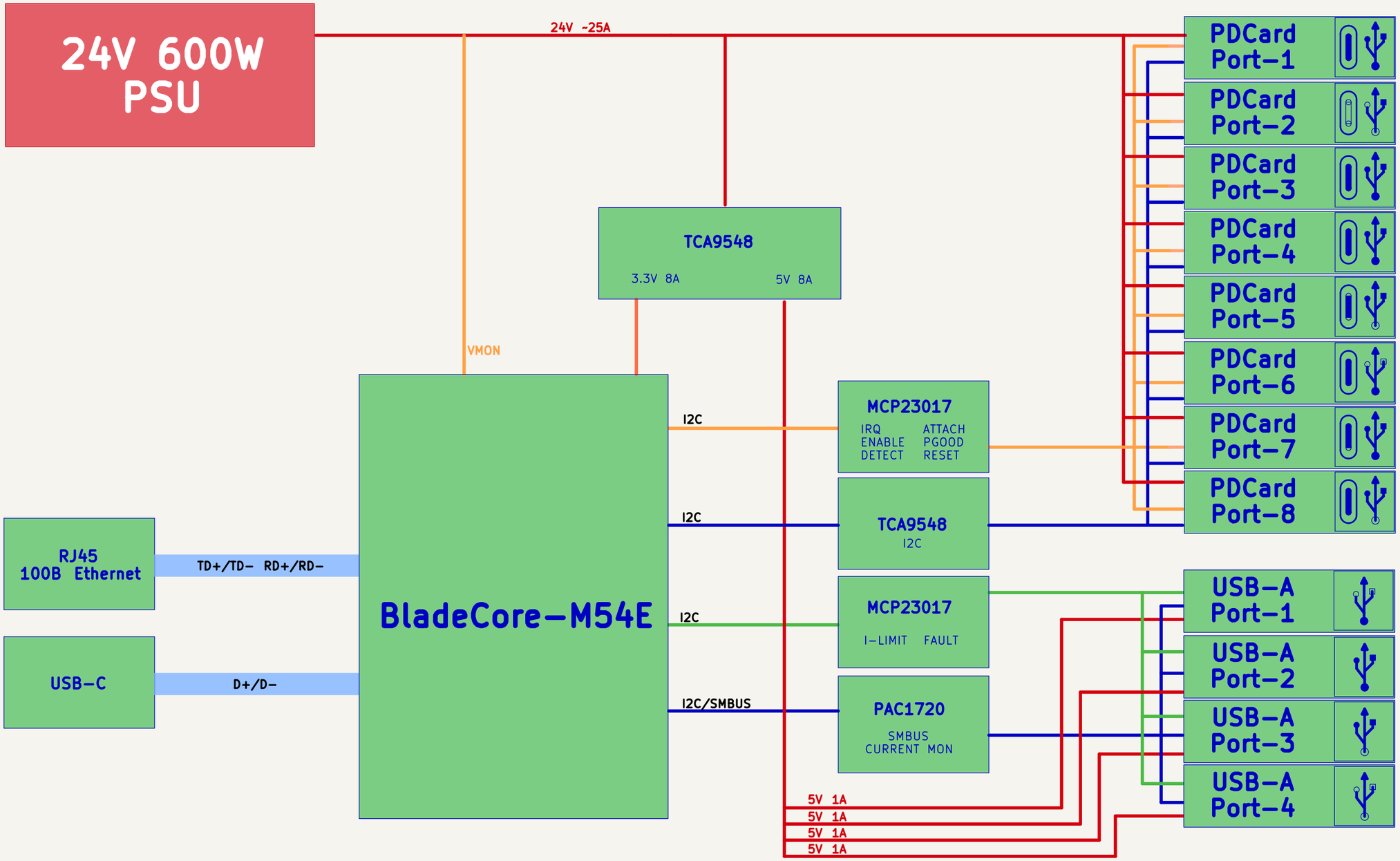

DMT Date: 2025-01-12	Board Name: PDNode-600		Project Name: Baseboard	
	File Name: Block Diagram.kicad_sch		Revision: 1.0.0	Variant:
Sheet Title: Block Diagram	Company: DvidMakesThings	Designer: David Sipos Reviewer:	Size: A3	Sheet: 2 of 15

Block Diagram

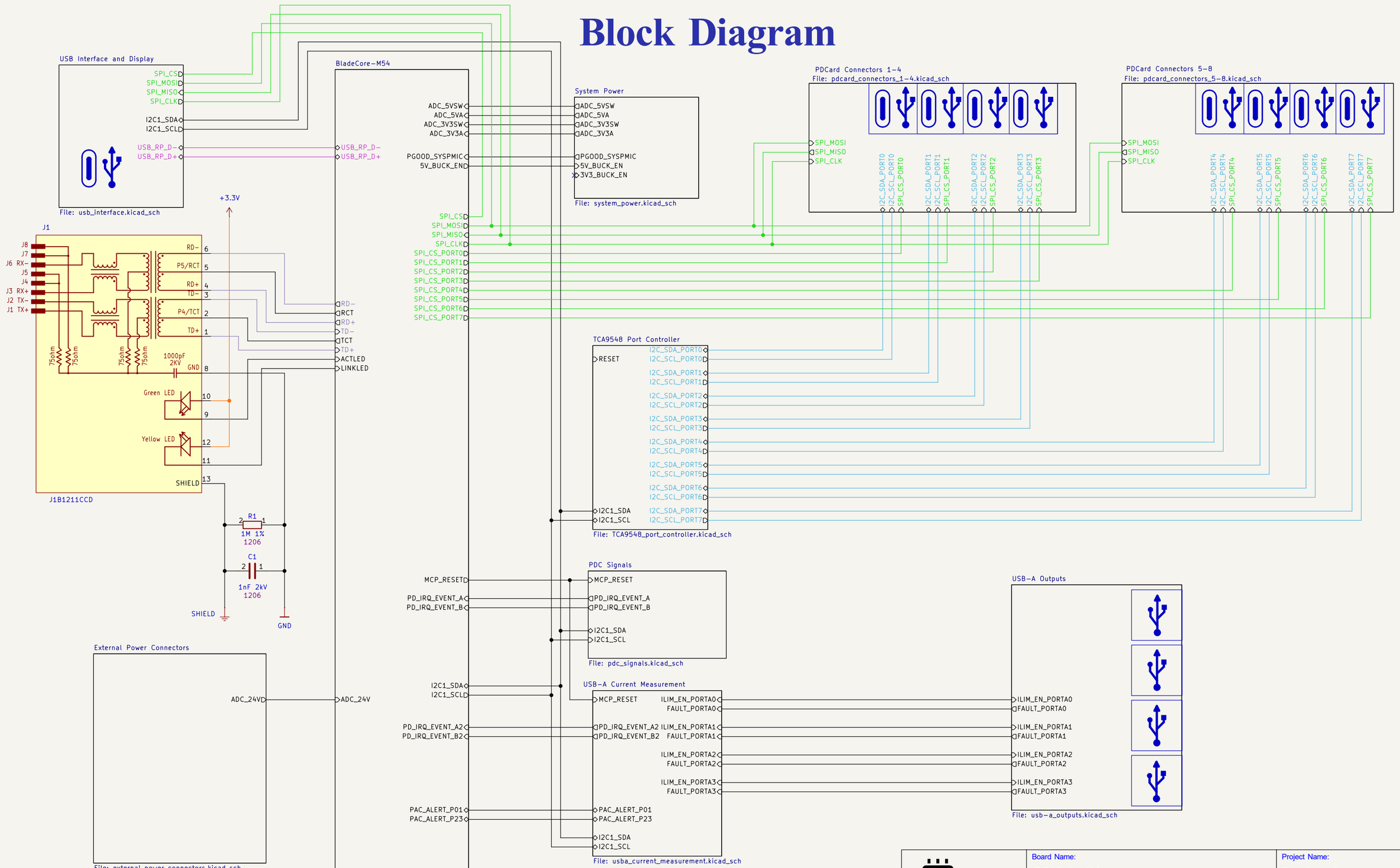

DMT Date: 2025-01-12	Board Name: **PDNode-600**		Project Name: **Baseboard**
	File Name: Project Architecture.kicad_sch		Revision: 1.0.0 / Variant:
Sheet Title: Project Architecture	Company: **DvidMakesThings**	Designer: David Sipos Reviewer:	Size: **A3** / Sheet: **3** of **15**

System Power

+24V TO +3.3V AND +5V CONVERTER

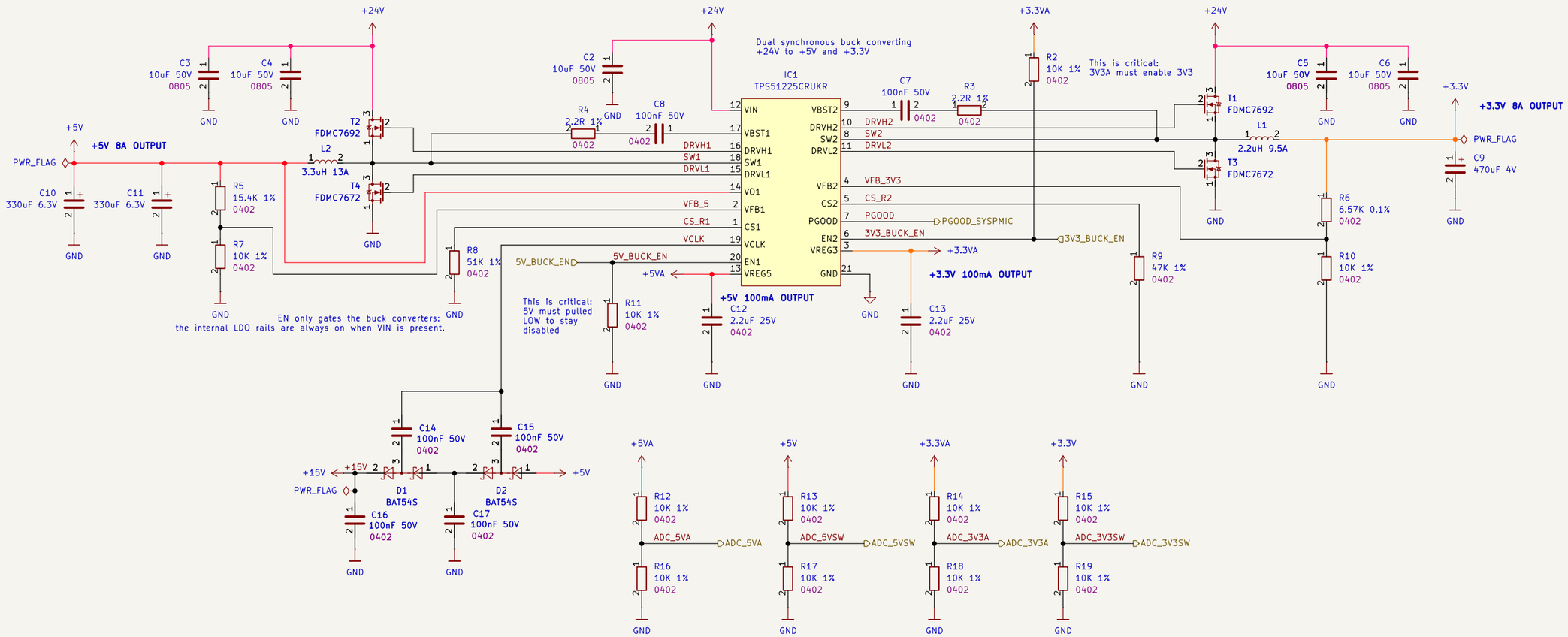

Date: 2025-01-12	Board Name: PDNode-600		Project Name: Baseboard
	File Name: system_power.kicad_sch		Revision: 1.0.0 / Variant:
Sheet Title: System Power	Company: DvidMakesThings	Designer: David Sipos Reviewer:	Size: A3 / Sheet: 4 of 15

Microcontroller

BladeCore-M54 Connector

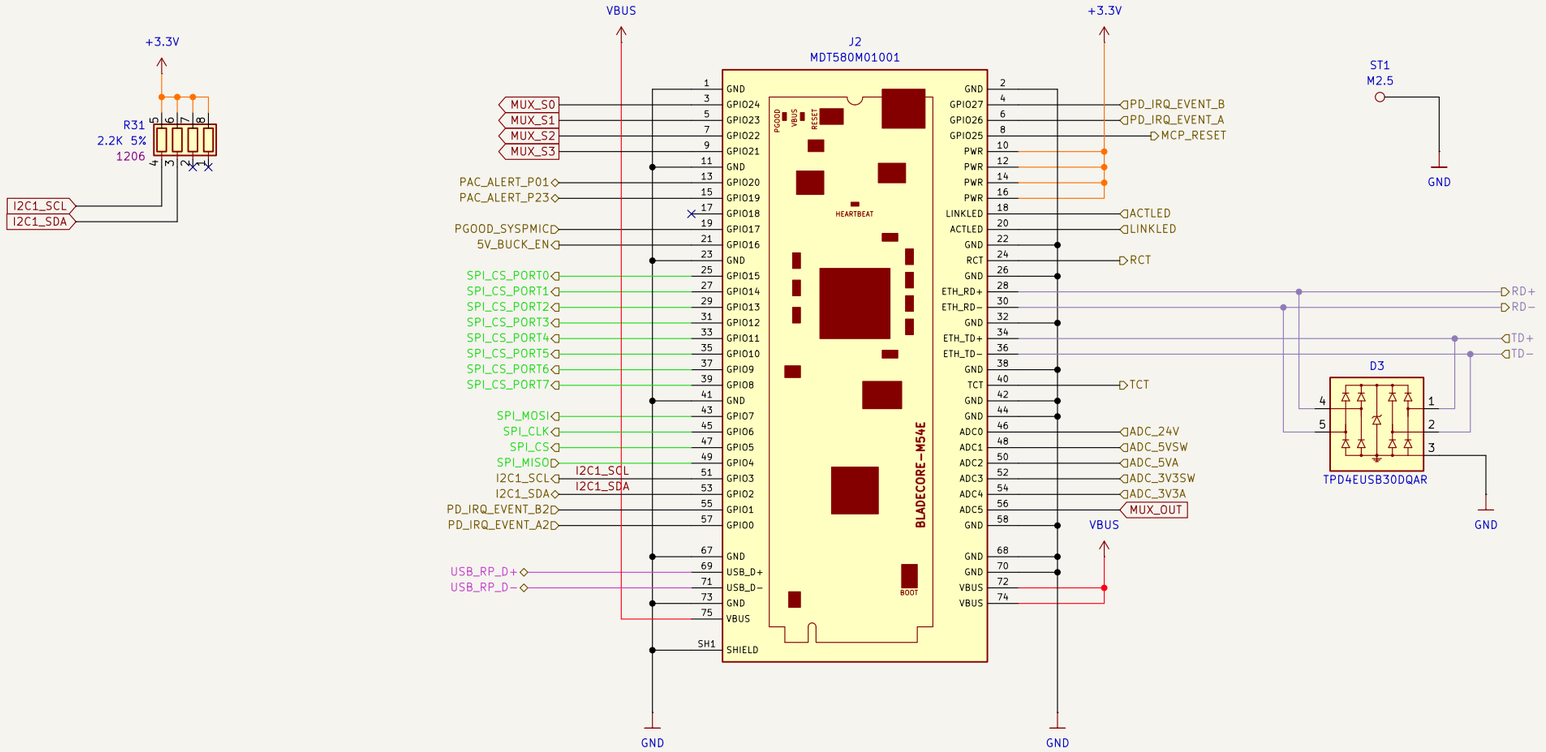

PDC ANALOG SIGNAL MUX

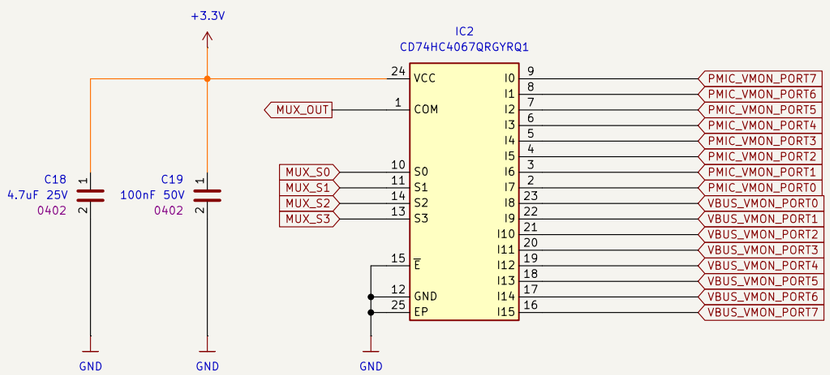

CD74HC4067QRGYRQ1:
==========
- Ron 160 Ω max: compared to THE divider (90.9K/10K) Thevenin (~9 kΩ), that's a ~1–2% scale error worst case if the ADC input were purely resistive. With 1 nF at the ADC INPUT, the mux mostly just charges that cap, so the practical impact is smaller.
- Leakage 800 nA max: into ~9 kΩ source is only ~7 mV worst-case equivalent error.
- Off capacitances (5 pF / 50 pF): 100R + 1 nF kills that nicely. Dummy conversion (throwaway sample) after switching helps too.
  R = 9K + 100R = 9.1K
  C = 1nF
  t = 9.1 us
  -> 5t = 45us after switching the MUX channel is settled

DMT Date: 2025-01-12	Board Name: **PDNode-600**		Project Name: **Baseboard**
	File Name: bladecore-m54.kicad_sch		Revision: 1.0.0 / Variant:
Sheet Title: BladeCore-M54	Company: **DvidMakesThings**	Designer: David Sipos Reviewer:	Size: **A3** / Sheet: **5** of **15**

USB Interface and Display

USB-C CONNECTOR

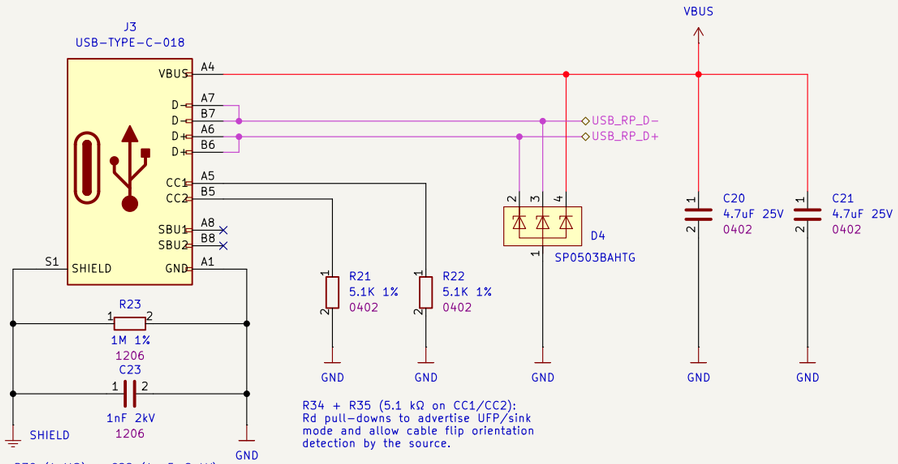

R34 + R35 (5.1 kΩ on CC1/CC2):
Rd pull-downs to advertise UFP/sink mode and allow cable flip orientation detection by the source.

R39 (1 MΩ) + C22 (1 nF, 2 kV):
Shield to GND reference network:
resistor provides a DC bleed/reference,
capacitor provides an HF path for
EMI/ESD without hard-bonding the shield.

DISPLAY CONNECTOR

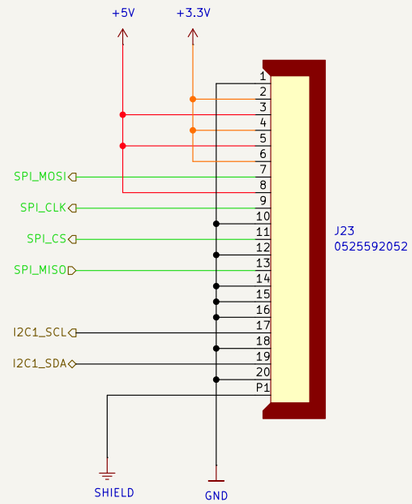

USB INDICATOR LED

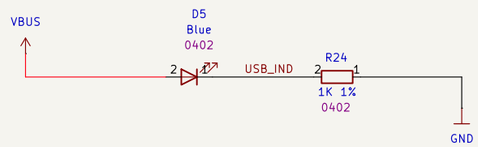

DMT Date: 2025-01-12	Board Name: **PDNode-600**		Project Name: **Baseboard**	
	File Name: usb_interface.kicad_sch		Revision: 1.0.0	Variant:
Sheet Title: USB Interface and Display	Company: **DvidMakesThings**	Designer: David Sipos Reviewer:	Size: **A3**	Sheet: **6** of **15**

TCA9548 Port Controller

TCA9548 1-TO-8 I2C MULTIPLEXER

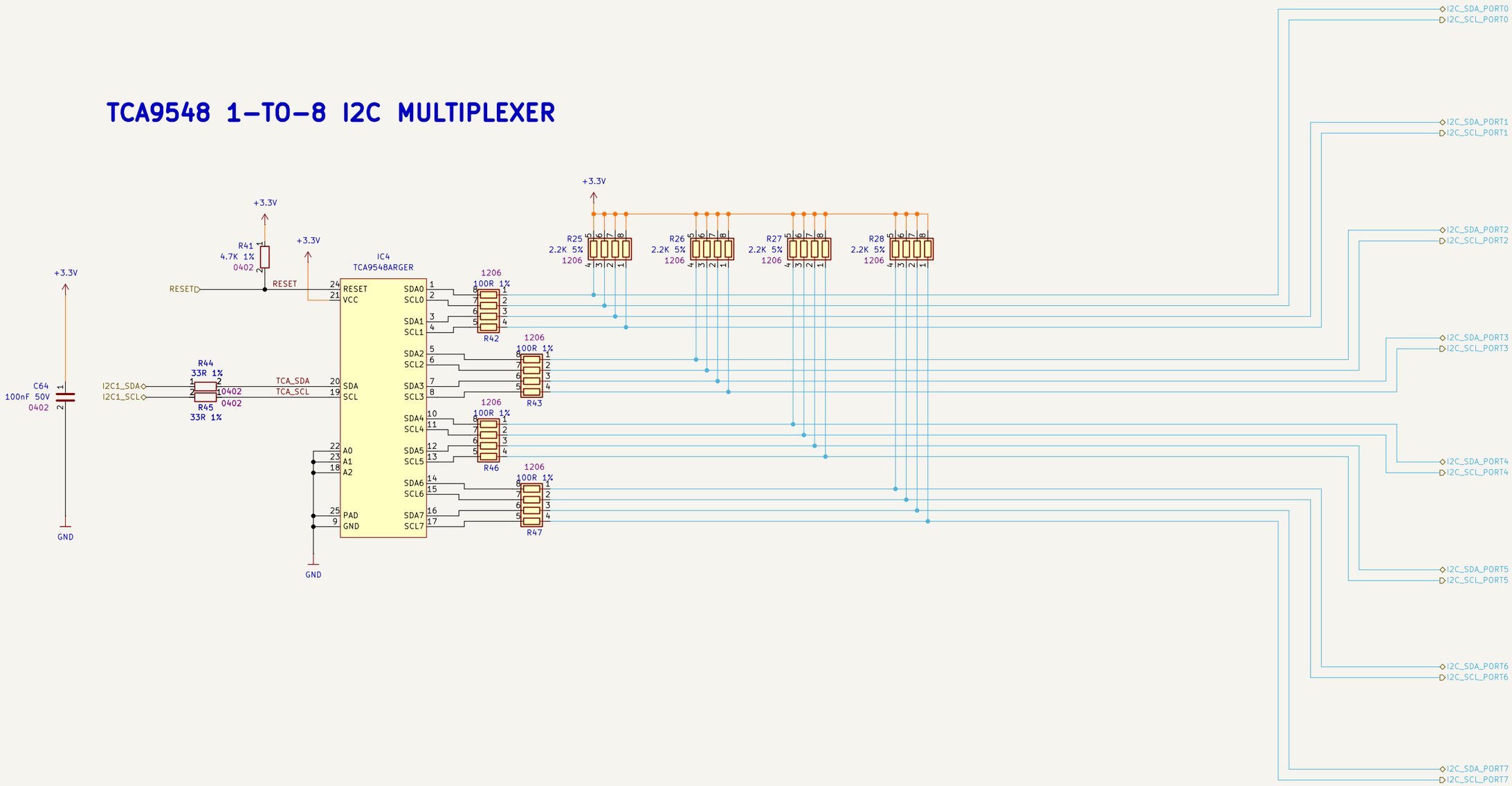

DMT Date: 2025-01-12	Board Name: **PDNode-600**		Project Name: **Baseboard**	
	File Name: TCA9548_port_controller.kicad_sch		Revision: 1.0.0	Variant:
Sheet Title: TCA9548 Port Controller	Company: **DvidMakesThings**	Designer: David Sipos Reviewer:	Size: **A3**	Sheet: **7** of **15**

PDCard Connectors 1-4

PORT0 PDC CONNECTOR

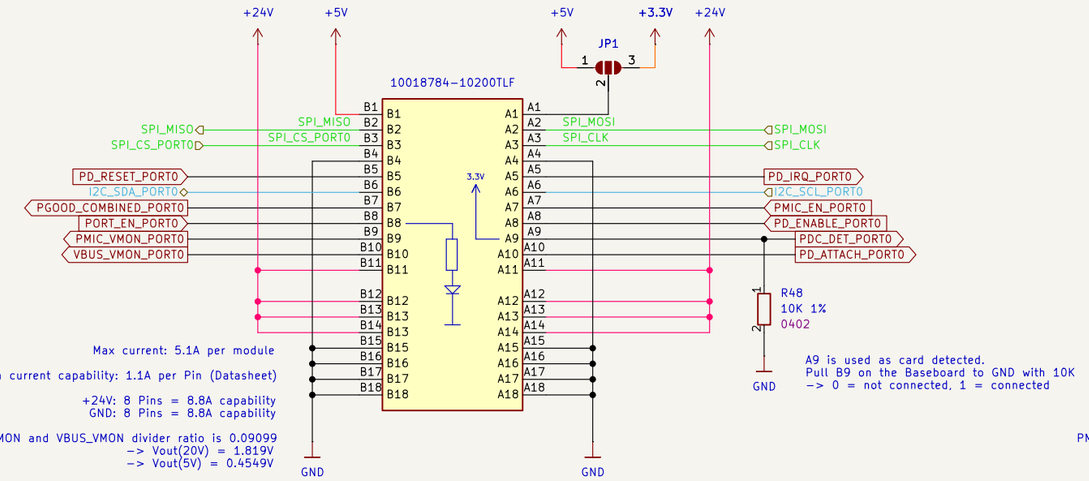

PORT1 PDC CONNECTOR

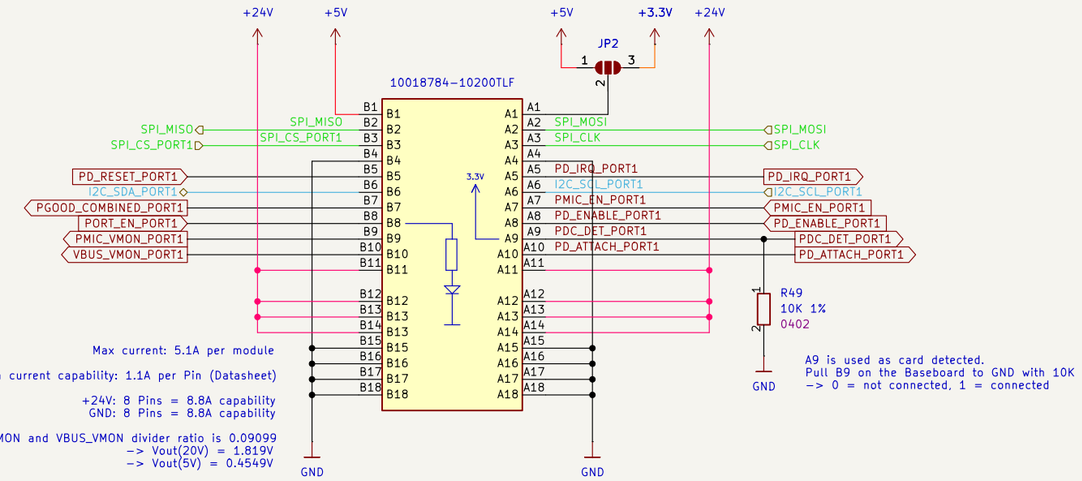

PORT2 PDC CONNECTOR

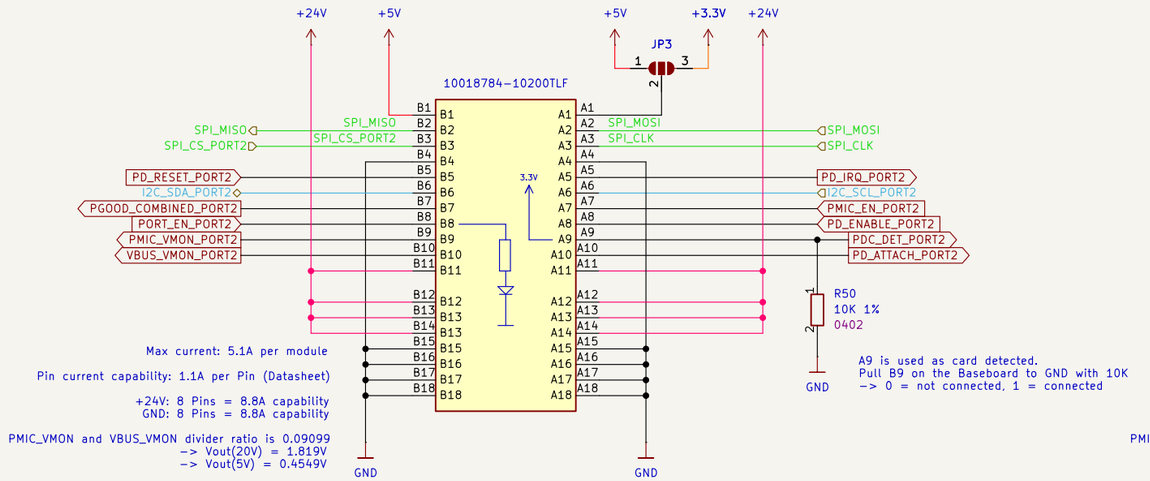

PORT3 PDC CONNECTOR

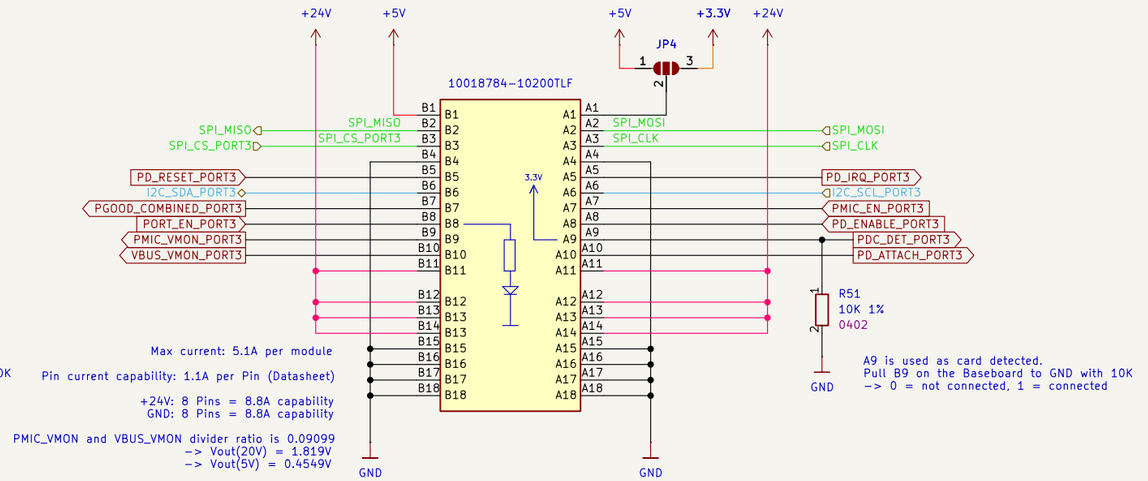

DMT Date: 2025-01-12	Board Name: **PDNode-600**		Project Name: **Baseboard**	
	File Name: pdcard_connectors_1-4.kicad_sch		Revision: 1.0.0	Variant:
Sheet Title: PDCard Connectors 1-4	Company: **DvidMakesThings**	Designer: David Sipos Reviewer:	Size: **A3**	Sheet: **8** of **15**

PDCard Connectors 5-8

PORT4 PDC CONNECTOR

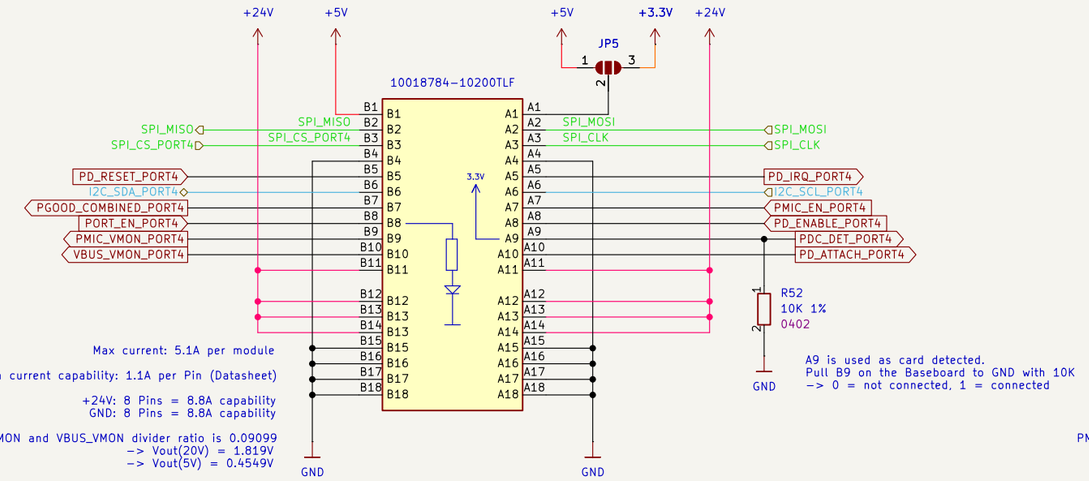

PORT5 PDC CONNECTOR

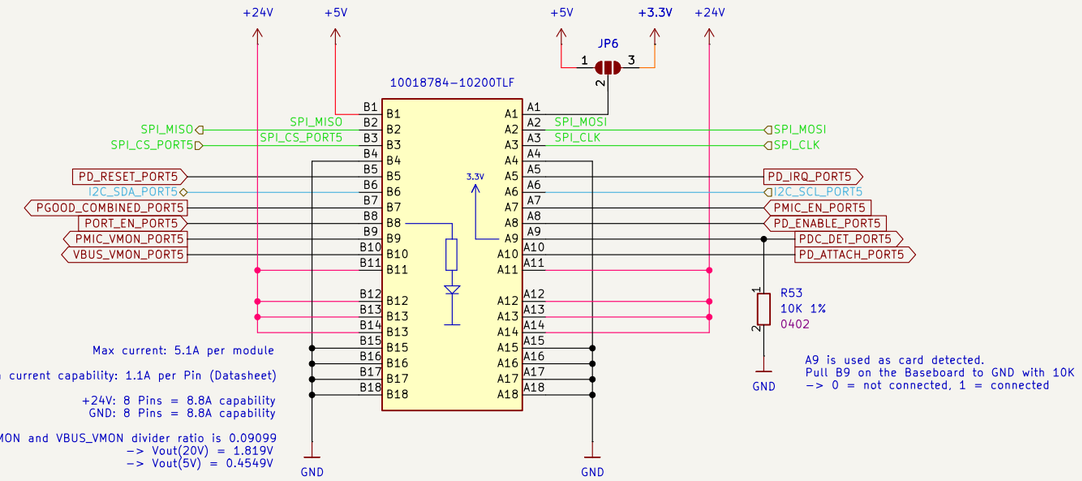

PORT6 PDC CONNECTOR

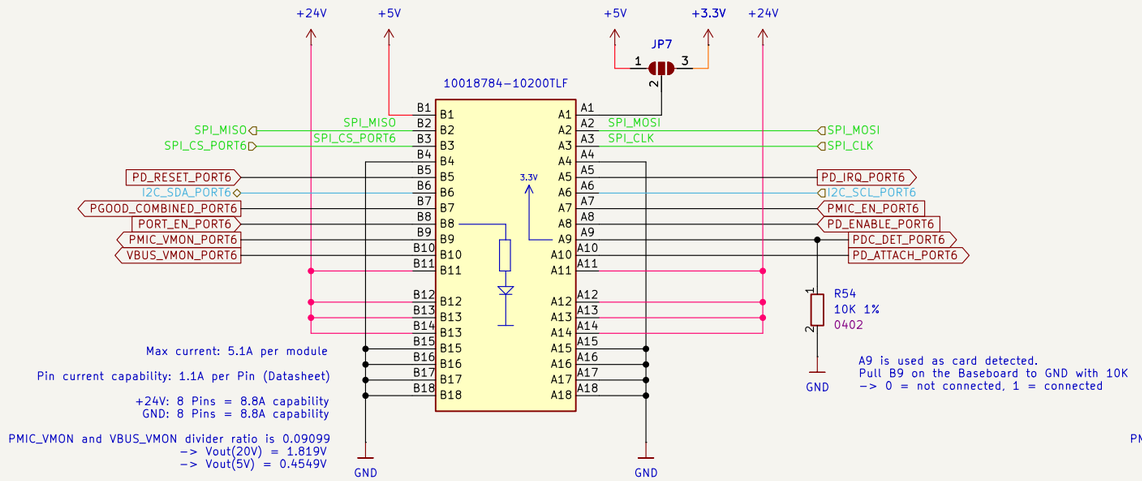

PORT7 PDC CONNECTOR

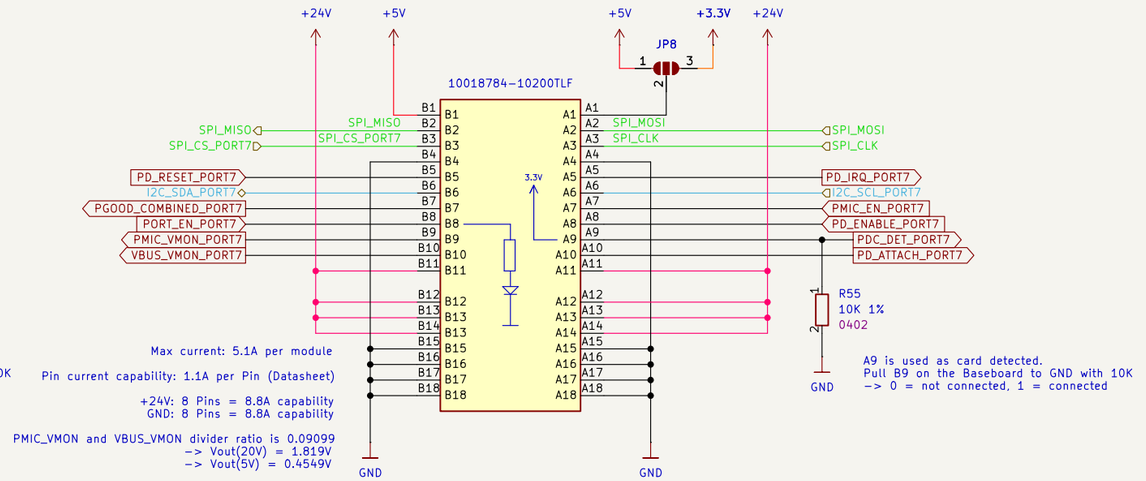

DMT Date: 2025-01-12	Board Name: **PDNode-600**		Project Name: **Baseboard**	
	File Name: pdcard_connectors_5-8.kicad_sch		Revision: 1.0.0	Variant:
Sheet Title: PDCard Connectors 5-8	Company: **DvidMakesThings**	Designer: David Sipos Reviewer:	Size: **A3**	Sheet: **9** of **15**

PDC Signals

PDC ENABLE LEDS

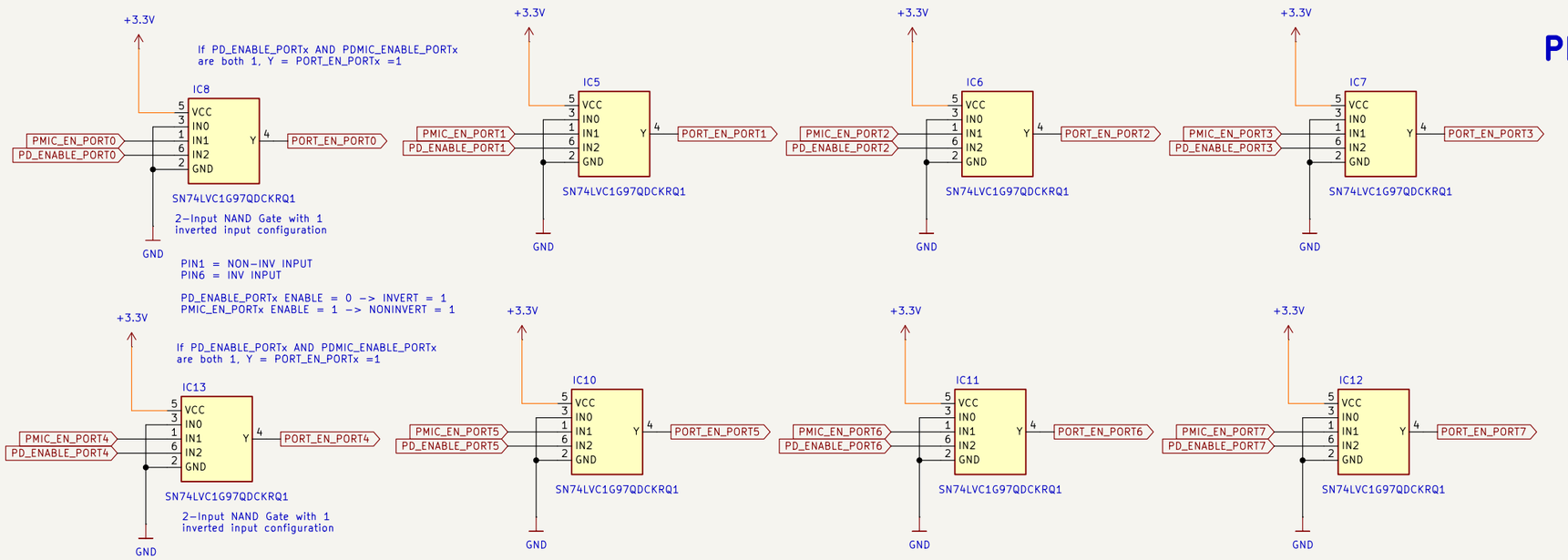

PDC RESET AND SINK-DETECT

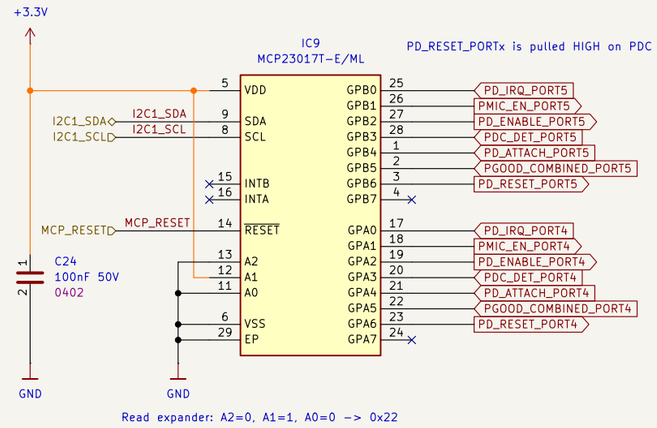

PDC CONTROL SIGNALS (TO WRITE)

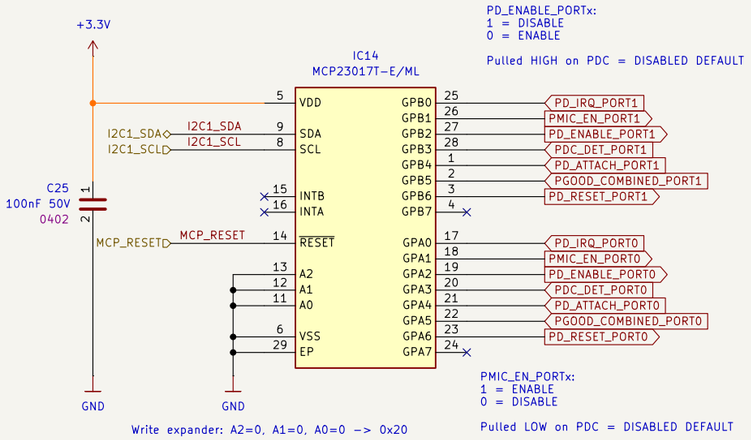

PDC STATUS SIGNALS (TO READ)

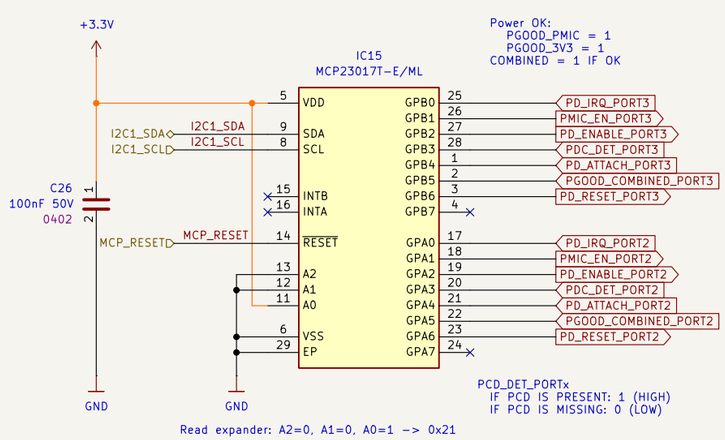

PDC INTERRUPT AND USB-A SIGNALS

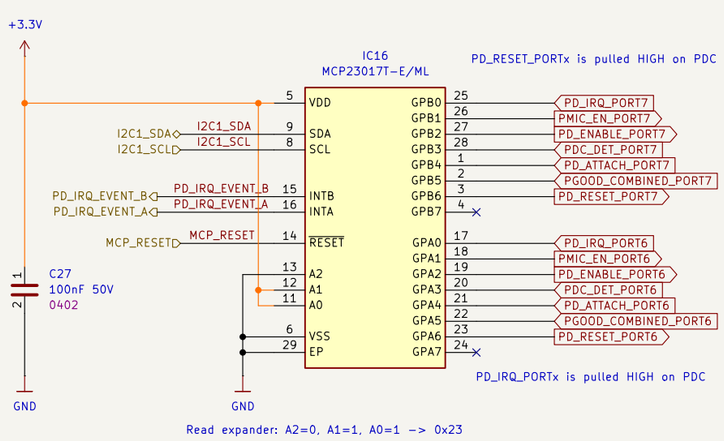

DECOUPLING

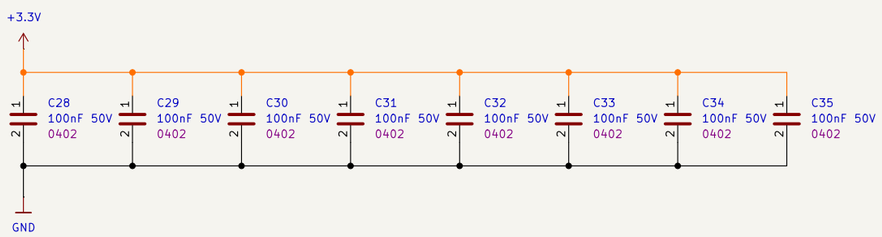

DMT Date: 2025-01-12	Board Name: **PDNode-600**		Project Name: **Baseboard**
	File Name: pdc_signals.kicad_sch		Revision: 1.0.0 / Variant:
Sheet Title: PDC Signals	Company: **DvidMakesThings**	Designer: David Sipos Reviewer:	Size: **A3** / Sheet: **10** of **15**

USB-A Outputs

USB CURRENT LIMIT SWITCH

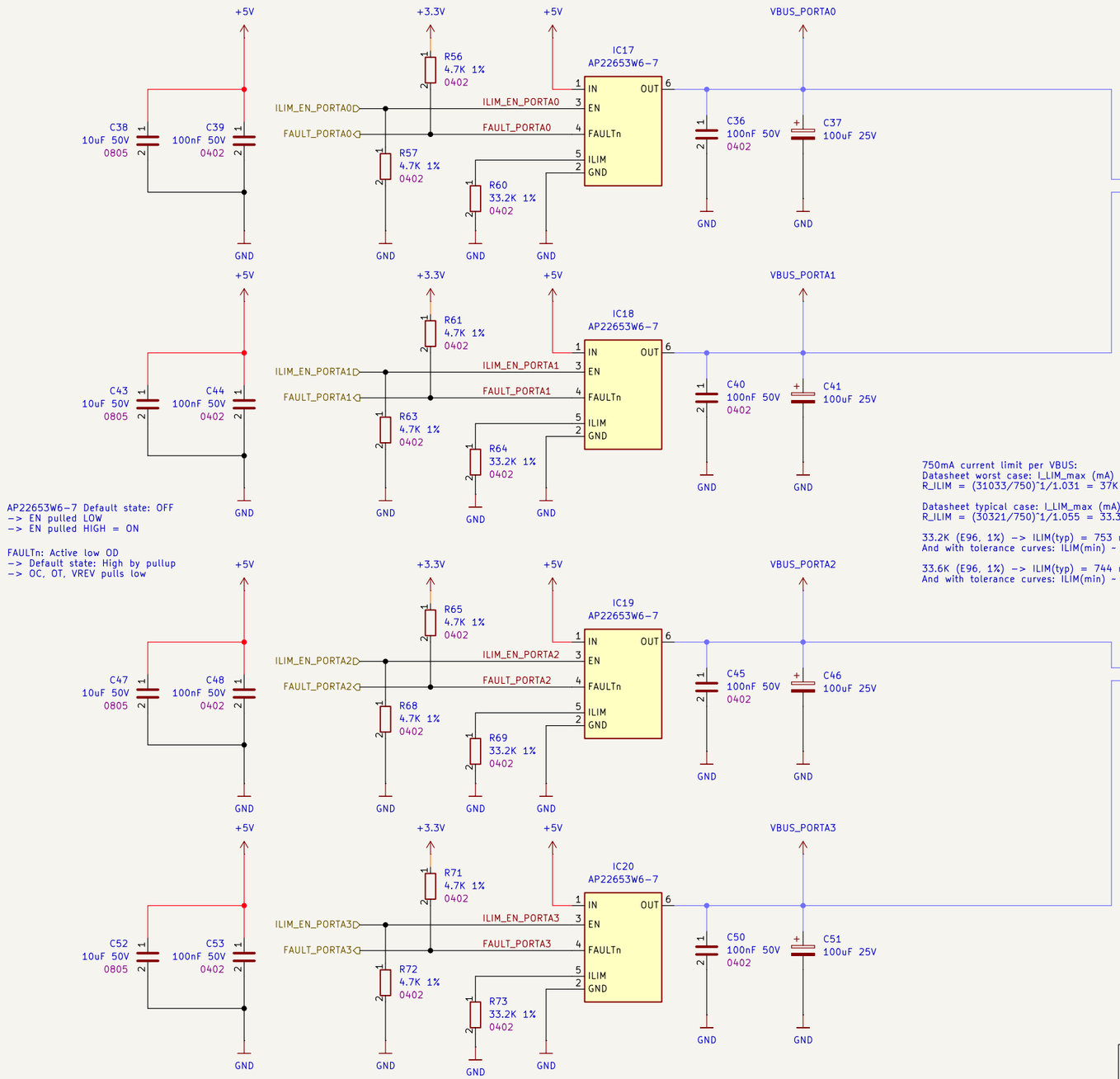

AP22653W6-7 Default state: OFF
-> EN pulled LOW
-> EN pulled HIGH = ON

FAULTn: Active low OD
-> Default state: High by pullup
-> OC, OT, VREV pulls low

750mA current limit per VBUS:
Datasheet worst case: I_LIM_max (mA) = 30321 / R_ILIM(K)^1.055
R_ILIM = (31033/750)^1/1.031 = 37K (750mA max)

Datasheet typical case: I_LIM_max (mA) = 30321 / R_ILIM(K)^1.055
R_ILIM = (30321/750)^1/1.055 = 33.3K (750mA max)

33.2K (E96, 1%) -> ILIM(typ) = 753 mA
And with tolerance curves: ILIM(min) ~ 671 mA, ILIM(max) ~ 839 mA

33.6K (E96, 1%) -> ILIM(typ) = 744 mA
And with tolerance curves: ILIM(min) ~ 662 mA, ILIM(max) ~ 828 mA

USB-A STACKED OUTPUTS

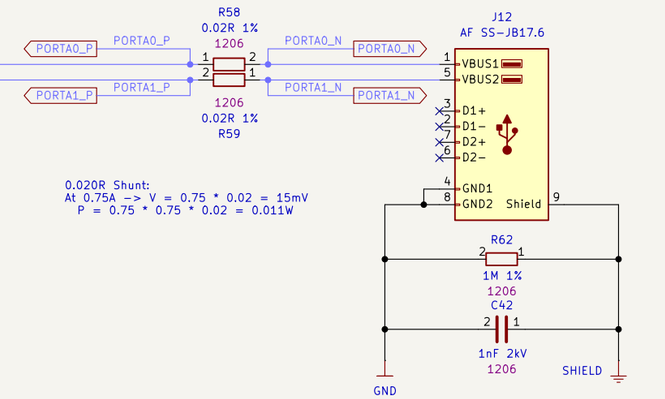

0.020R Shunt:
At 0.75A -> V = 0.75 * 0.02 = 15mV
P = 0.75 * 0.75 * 0.02 = 0.011W

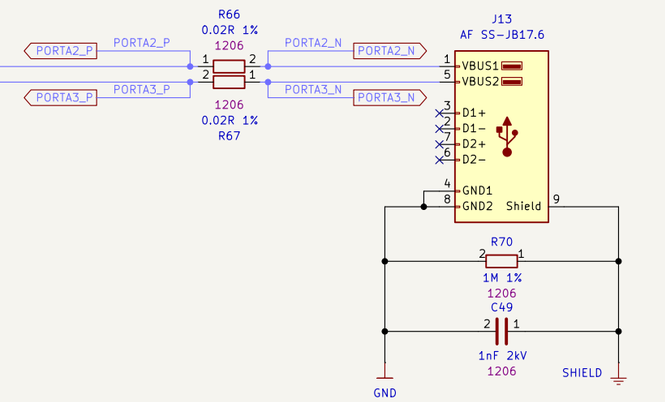

DMT Date: 2025-01-12	Board Name: **PDNode-600**		Project Name: **Baseboard**	
	File Name: usb-a_outputs.kicad_sch		Revision: 1.0.0	Variant:
Sheet Title: USB-A Outputs	Company: **DvidMakesThings**	Designer: David Sipos Reviewer:	Size: **A3**	Sheet: **11** of **15**

USB-A Current Measurement

USB CURRENT MEASUREMENT

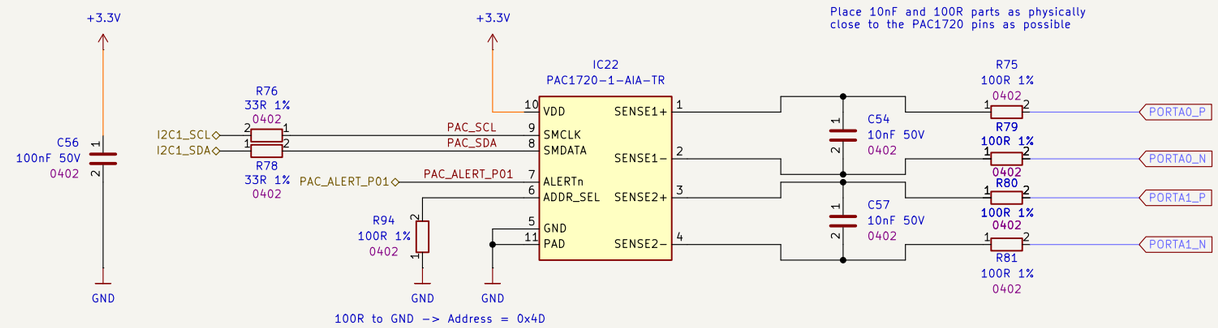

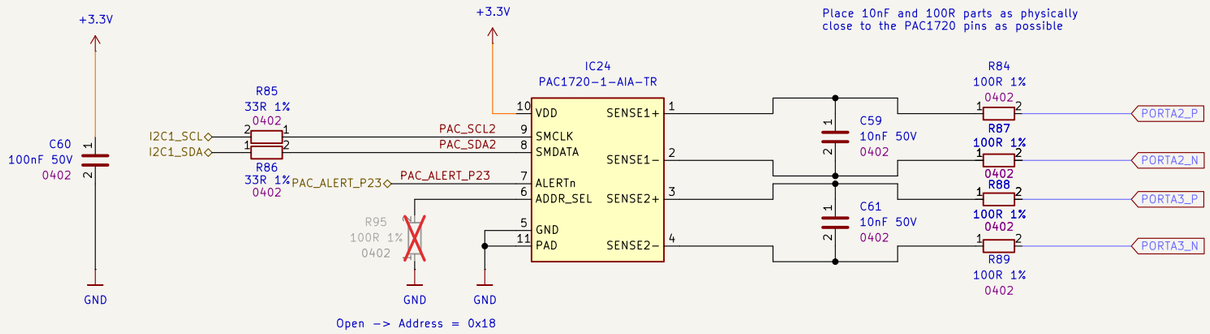

USB-A SIGNALS

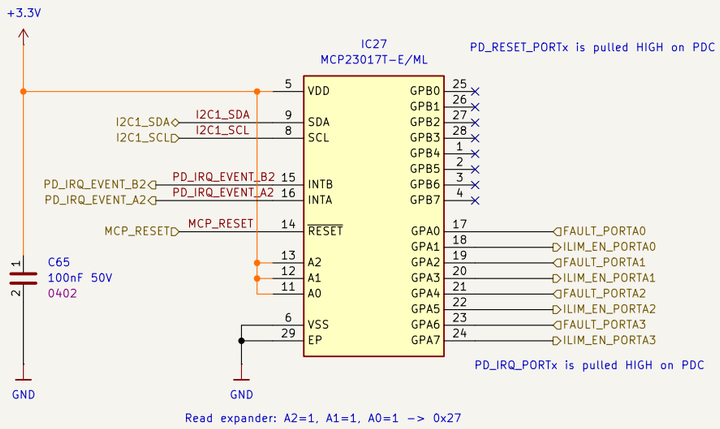

USB-A CURRENT LIMIT SIGNALS

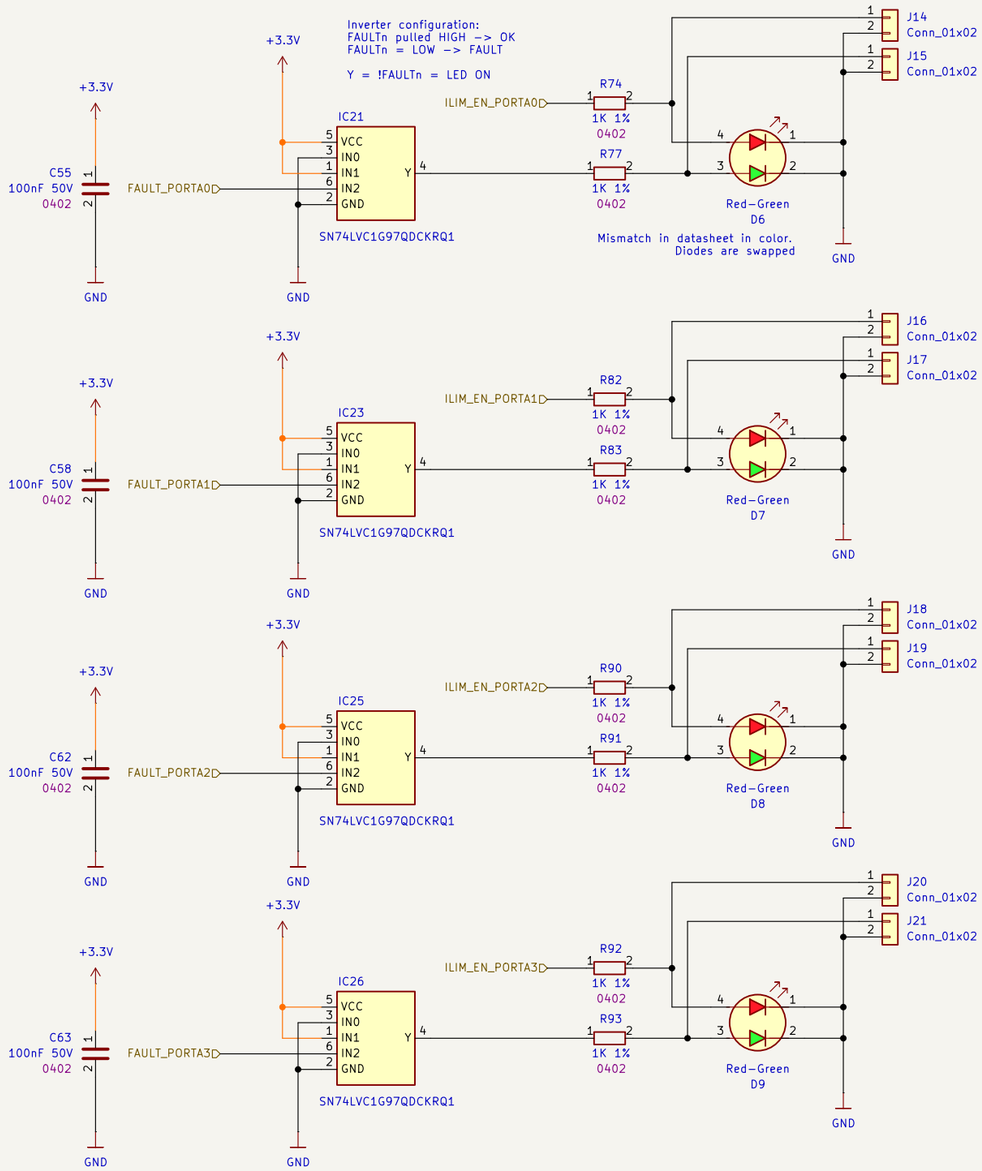

DMT Date: 2025-01-12	Board Name: **PDNode-600**		Project Name: **Baseboard**
	File Name: usba_current_measurement.kicad_sch		Revision: 1.0.0 / Variant:
Sheet Title: USB-A Current Measurement	Company: **DvidMakesThings**	Designer: David Sipos Reviewer:	Size: **A3** / Sheet: **12** of **15**

External Power Connectors

8 PIN EPS +24V POWER CONNECTOR

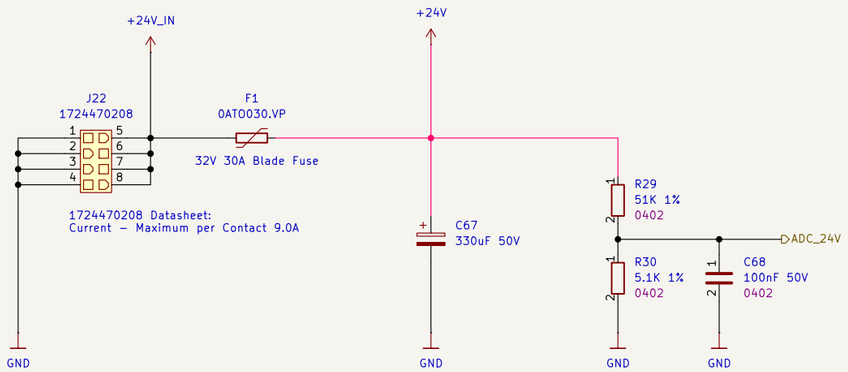

MOUNTING HOLES

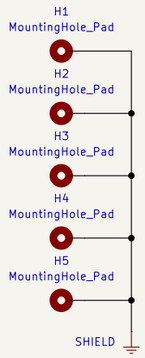

DMT Date: 2025-01-12	Board Name: **PDNode-600**		Project Name: **Baseboard**	
	File Name: external_power_connectors.kicad_sch		Revision: 1.0.0	Variant:
Sheet Title: External Power Connectors	Company: **DvidMakesThings**	Designer: David Sipos Reviewer:	Size: **A3**	Sheet: **13** of **15**

[14] Power - Sequencing

Biggest landmine with PAC1720:
don't let the SENSE pins see VBUS when VDD is unpowered.
If USB 5V can exist while 3.3V is off, mitigation is needed
That's the one thing that can turn "happy board" into "dead board."

POWER SEQUENCING
==========

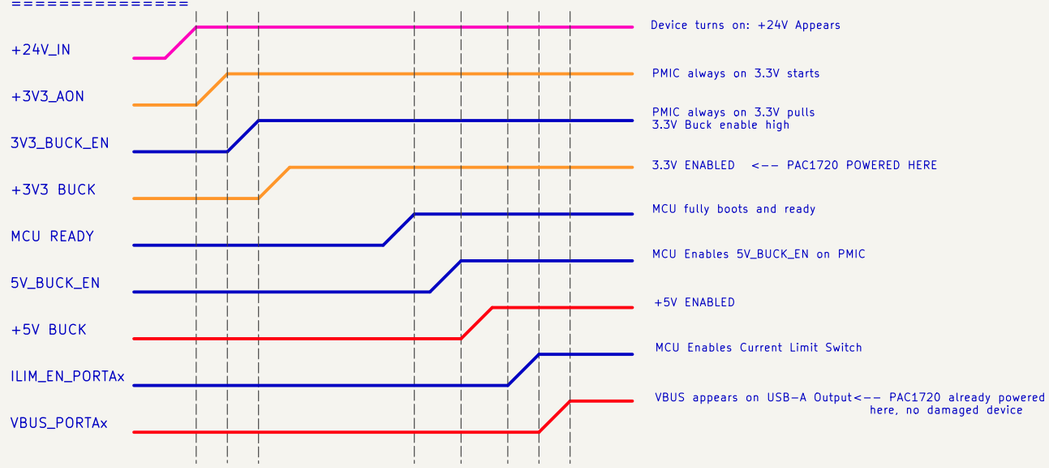

DMT Date: 2025-01-12	Board Name: **PDNode-600**		Project Name: **Baseboard**	
	File Name: Power - Sequencing.kicad_sch		Revision: 1.0.0	Variant:
Sheet Title: Power - Sequencing	Company: **DvidMakesThings**	Designer: David Sipos Reviewer:	Size: **A3**	Sheet: **14** of **15**

Revision History

DATE	REVISION	RESPONSIBLE	CHANGE
15.02.2026	0.0.1	DMT	INITIAL CREATION
29.03.2026	1.0.0	DMT	Fix wiring issues: MCP23017 SDA/SCL swapped PAC1720 addressing was wrong MCP23017 USB-A duplicated addressing TPS51225 LDO undersized cap changed from 1nF to 2.2uF

DMT Date: 2025-01-12	Board Name: PDNode-600		Project Name: Baseboard
	File Name: Revision History.kicad_sch		Revision: 1.0.0 / Variant:
Sheet Title: Revision History	Company: DvidMakesThings	Designer: David Sipos Reviewer:	Size: A3 / Sheet: 15 of 15