PDCard-4242 Schematic Documentation

Project: PDNode-600 Board: PDCard-4242 Var:

Rev 1.0.0 2026-02-25

CONTENT

Page	Index
1	Cover Page
2	Block Diagram
3	Project Architecture
4	USB-PD Source Controller
5	Board Connector and Supplies
6	Power - Sequencing
7	Revision History
8	.....
9	.....
10	.....
11	.....
12	.....
13	.....
14	.....
15	.....
16	.....
17	.....
18	.....
19	.....
20	.....

PCB PREVIEW

TOP VIEW

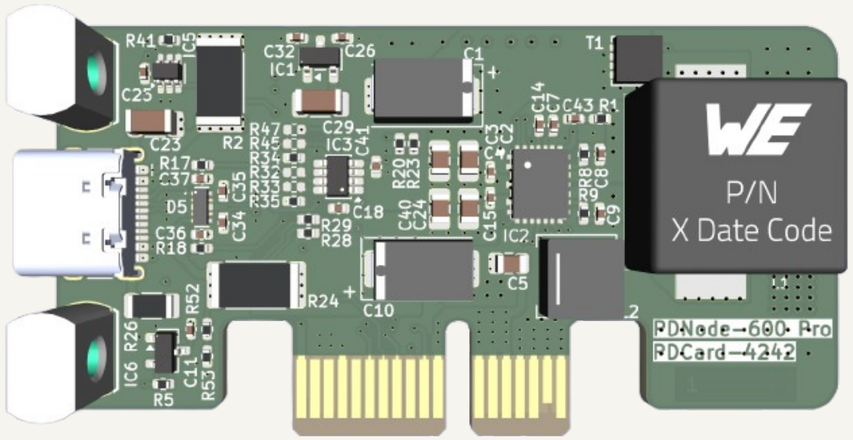

BOTTOM VIEW

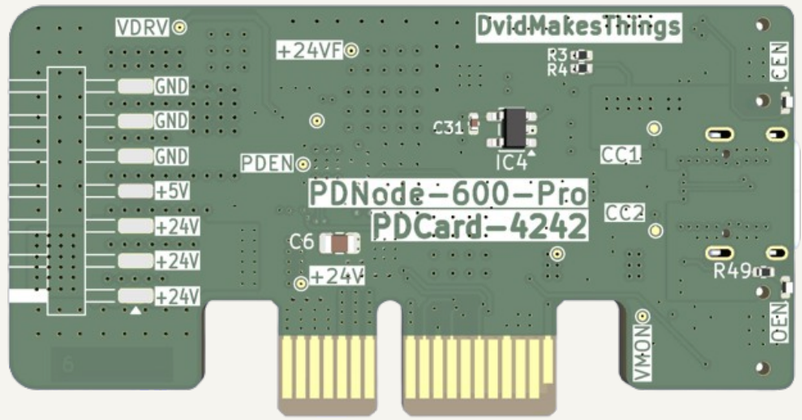

COMMENT GUIDELINES

General comments are black, 50 mil size
Design notes and guidelines are blue, 50 mil size
Layout instructions are red, 50 mil size

NOTES

Not fitted components are marked as ✗

DMT Date: 2025-01-12	Board Name: PDNode-600		Project Name: PDCard-4242
	File Name: PDNode-PDCard-4242.kicad_sch		Revision: 1.0.0 / Variant:
Sheet Title: PDNode-PDCard-4242	Company: DvidMakesThings	Designer: David Sipos Reviewer:	Size: A3 / Sheet: 1 of 7

[2] Block Diagram

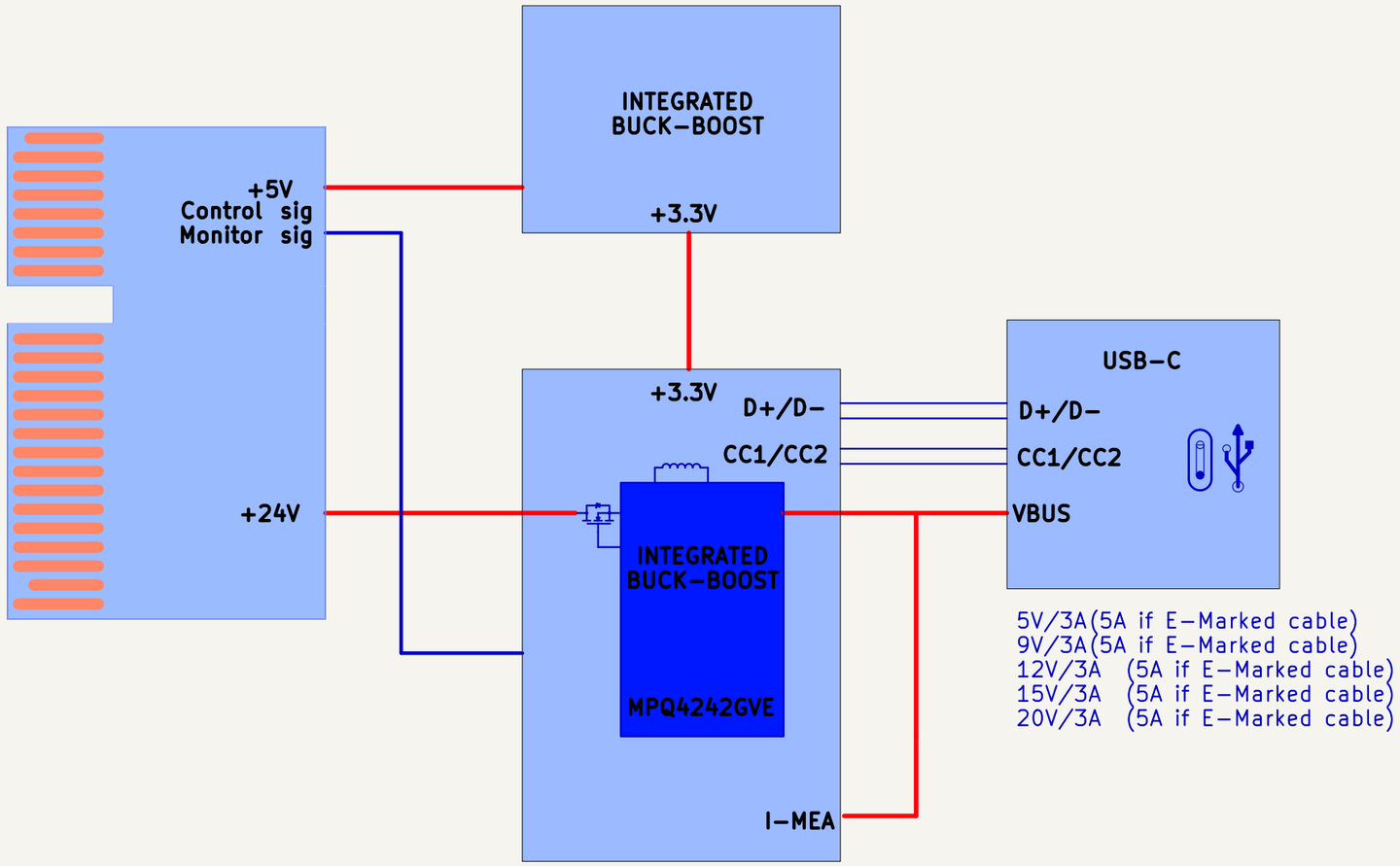

DMT Date: 2026-01-31	Board Name: PDNode-600		Project Name: PDCard-4242	
	File Name: Block Diagram.kicad_sch		Revision: 1.0.0	Variant:
Sheet Title: Block Diagram	Company: DvidMakesThings	Designer: David Sipos Reviewer:	Size: A3	Sheet: 2 of 7

Block Diagram

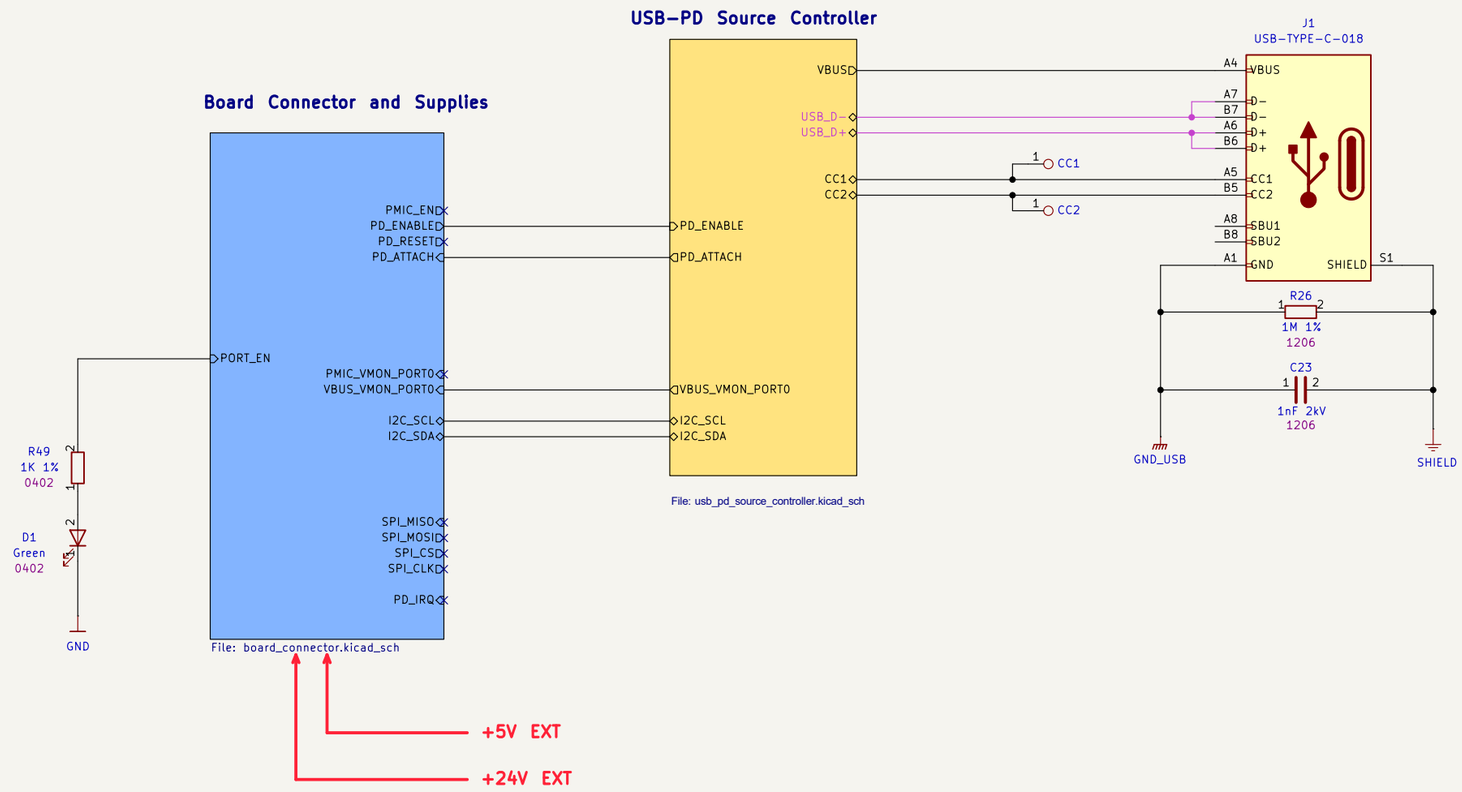

DMT Date: 2025-01-12	Board Name: **PDNode-600**		Project Name: **PDCard-4242**
	File Name: Project Architecture.kicad_sch		Revision: 1.0.0 / Variant:
Sheet Title: Project Architecture	Company: **DvidMakesThings**	Designer: David Sipos Reviewer:	Size: **A3** / Sheet: **3** of **7**

USB-PD SOURCE CONTROLLER

INA219BIDCNT CURRENT MEASUREMENT

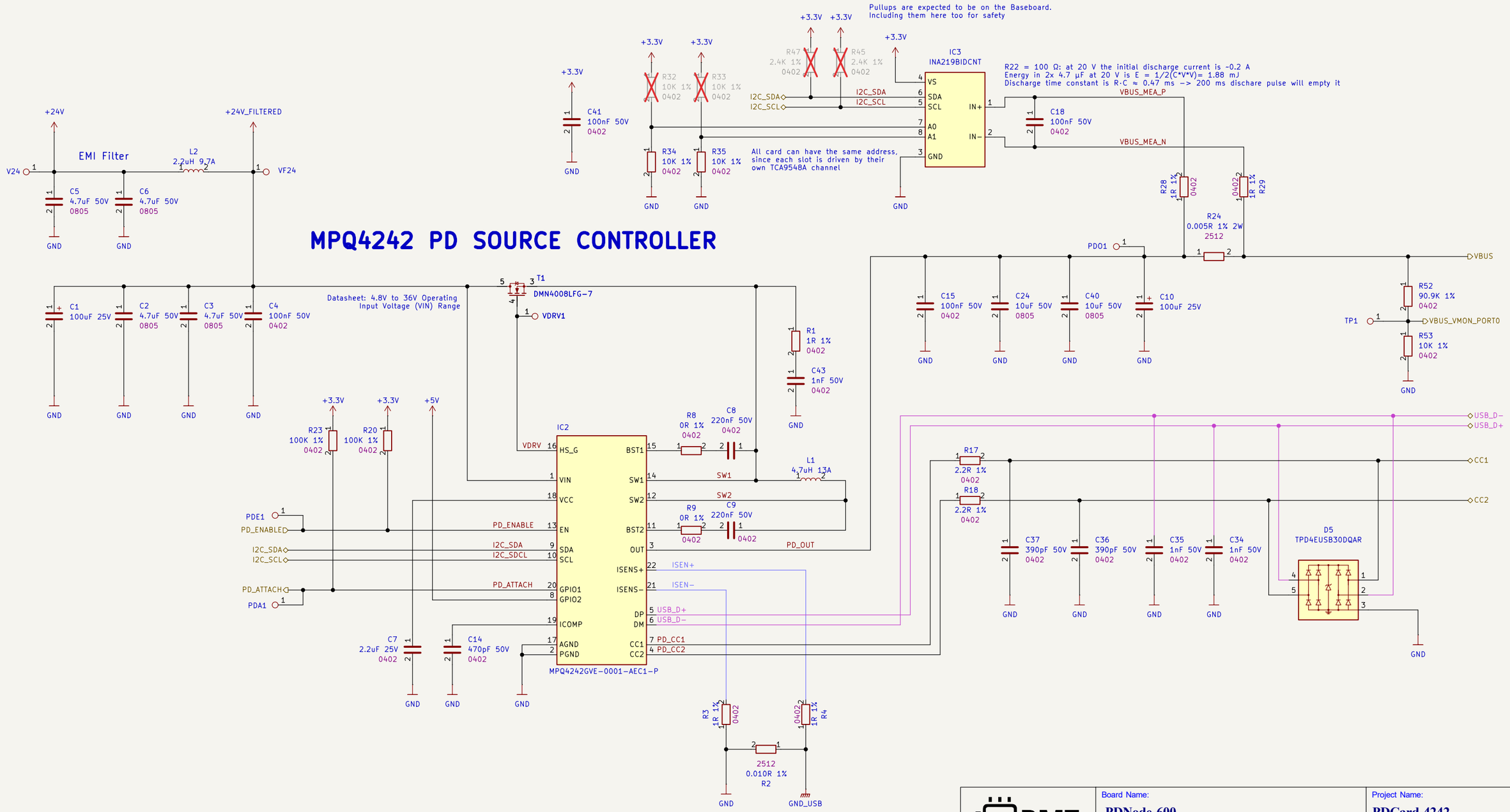

DMT Date: 2025-01-12	Board Name: **PDNode-600**		Project Name: **PDCard-4242**
	File Name: usb_pd_source_controller.kicad_sch		Revision: 1.0.0 / Variant:
Sheet Title: USB-PD Source Controller	Company: **DvidMakesThings**	Designer: David Sipos Reviewer:	Size: **A3** / Sheet: **4** of **7**

BOARD CONNECTOR AND SUPPLIES

+5V to 3.3V PMIC

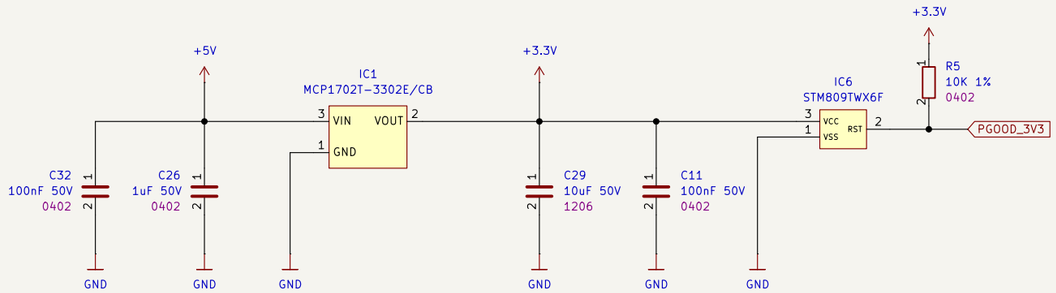

3.3V setpoint (FB divider):
Datasheet "Setting the Output Voltage"
formula: Vout = Vfb * (1 + R1/R2), Vfb = 0.8V.

Chosen 1% values: R2 = 2.40k, R1 = 7.50k.
Result: Vout = 0.8 * (1 + 7.5/2.4) = 3.300V nominal.
R2 kept <= 4k to stay well under the datasheet's 4.99k guideline.

ENABLE STATUS

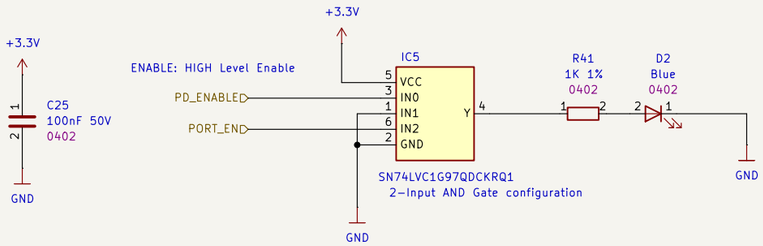

PCIE-X1 BOARD EDGE CONNECTOR

If +3.3V is selected, PMIC above is all DO NOT MOUNT except R37, since it would backfeed the carrier's 3.3V rail

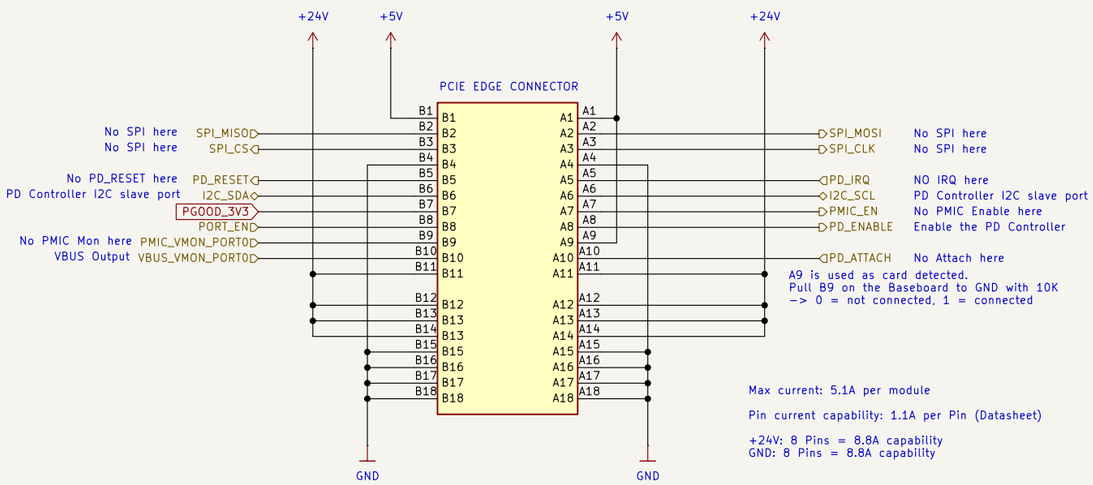

Max current: 5.1A per module

Pin current capability: 1.1A per Pin (Datasheet)

+24V: 8 Pins = 8.8A capability
GND: 8 Pins = 8.8A capability

DEVICE ID EEPROM

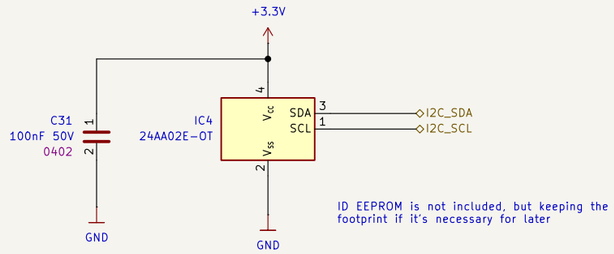

ID EEPROM is not included, but keeping the footprint if it's necessary for later

DEBUG POWER CONNECTOR

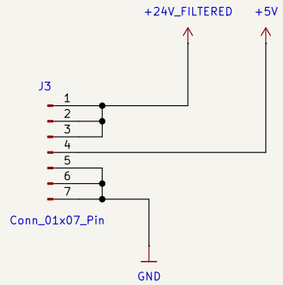

MOUNTING HOLES

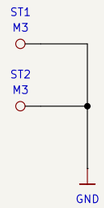

DMT Date: 2025-01-12	Board Name: **PDNode-600**		Project Name: **PDCard-4242**
	File Name: board_connector.kicad_sch		Revision: 1.0.0 / Variant:
Sheet Title: Board Connector and Supplies	Company: **DvidMakesThings**	Designer: David Sipos Reviewer:	Size: **A3** / Sheet: **5** of **7**

[6] Power - Sequencing

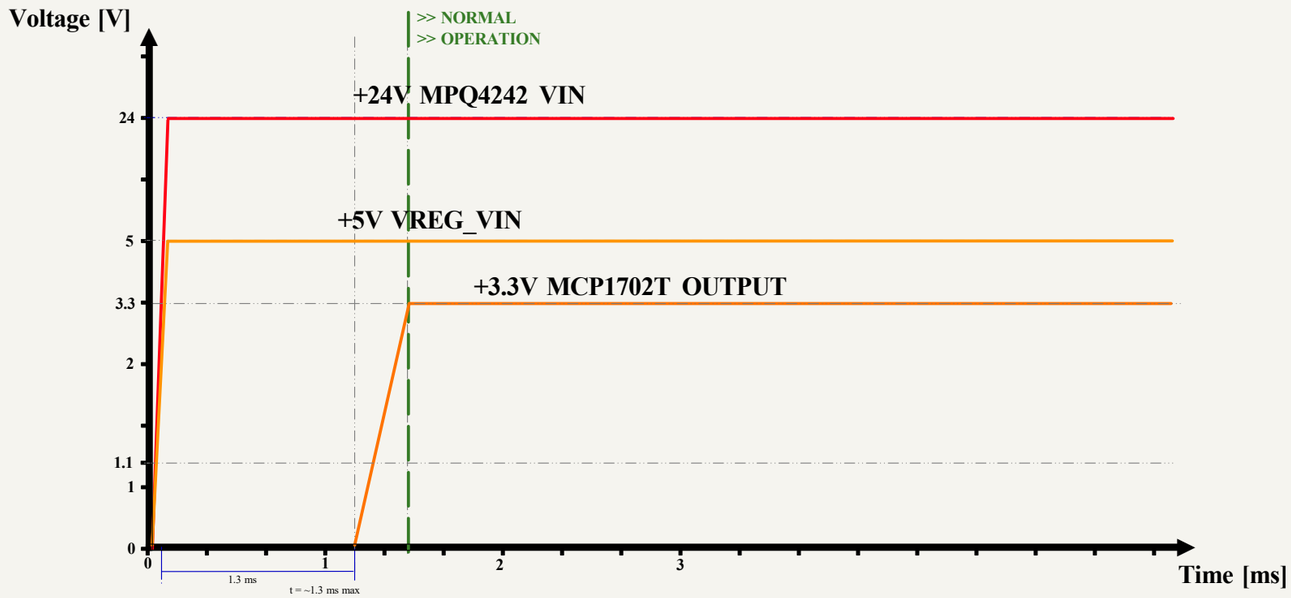

DMT Date: 2025-01-12	Board Name: **PDNode-600**		Project Name: **PDCard-4242**	
	File Name: Power - Sequencing.kicad_sch		Revision: 1.0.0	Variant:
Sheet Title: Power - Sequencing	Company: **DvidMakesThings**	Designer: David Sipos Reviewer:	Size: **A3**	Sheet: **6** of **7**

Revision History

DATE	REVISION	RESPONSIBLE	CHANGE
25.02.2026	1.0.0	DMT	INITIAL CREATION

DMT Date: 2025-01-12	Board Name: **PDNode-600**		Project Name: **PDCard-4242**
	File Name: Revision History.kicad_sch		Revision: 1.0.0 / Variant:
Sheet Title: Revision History	Company: **DvidMakesThings**	Designer: David Sipos Reviewer:	Size: **A3** / Sheet: **7** of **7**