Ellipse for wellness and beauty
Instruction manual
www.ellic.bike

Dear customer! Thank you for choosing Ellic and congratulations on buying a modern nordic walking machine on wheels. We are sure that with proper maintenance and proper operation, your trainee will serve you faithfully for a long time, and will deliver many pleasant, exciting hours during skiing. Your trainee will provide you with functionality, comfort and safety while observing the rules of movement set out in this guide. We urge you to read this guide carefully before you start training for the first time.

Content:

1. General device of the trainee
2. Rules of trainee control
3. Basic safety rules during the operation of the trainee
4. Basic rules for the operation of the trainee
5. Warranty Information
Warranty card

1. General device of the trainee

Ellic is a rather complex design and, in fact, is the next evolutionary step in the development of the bicycle, bringing the trainee closer to the wheeled exoskeleton. At the same time, a significant number of parts the trainee borrowed from the bicycle. At the heart of the trainee is a frame on which all its other elements are mounted. The main ones are listed below.

The device contains a spatial symmetrical frame having side longitudinal guides, carriages that move forward and backward along longitudinal guides, two wheels fixed with their axis on carriages and hand levers connected to pedals and wheels.

General view of the device

Side view

View with handles folded

View of hand levers with brakes

Overall pattern

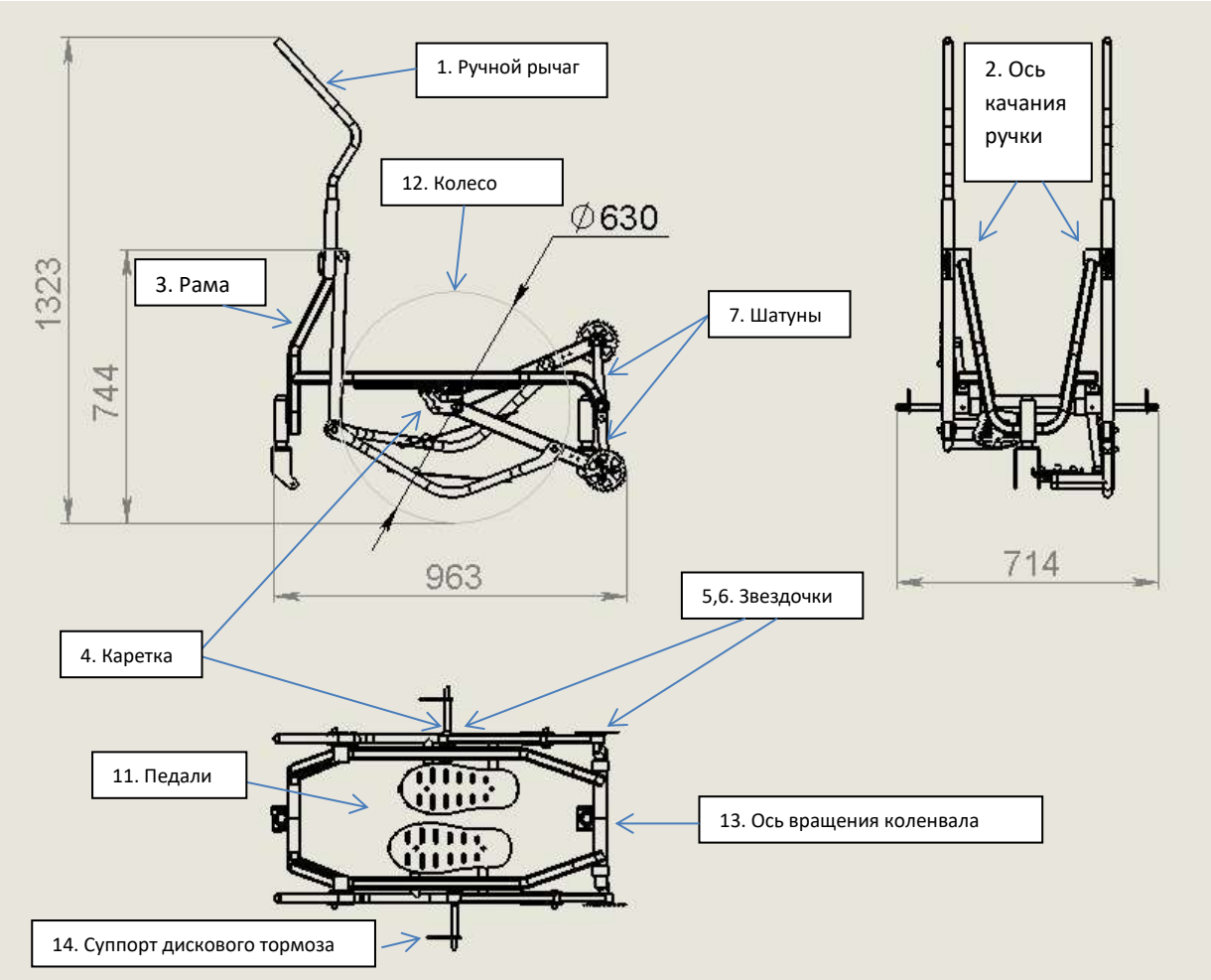

Dimensions of the trainee rider

Leg size RU: 35-46
Height of rider: 160 – 190 см
Weight of rider: 60 – 100 kg

On the overall picture: forward movement - to the left; rotation of the crankshaft - counterclockwise; the position of the wheels - on one axis (combined), the position of the legs - the left leg from below, the right from above; position of the handles – the average position of the stroke;
Where is:

1 – handle (hand lever);
2 – the axis of the knob swing;
3 – frame;
4 – carriage;
5, 6 – stars;
7 – crankshaft connecting rod;
8 – crankshaft-carriage thrust;
9 – chain (not shown, dressed on asterisks 5.6 on each side);
10 – pedal thrust;
11 – pedal;
12 – wheel (usually 24 inches);
13 – crankshaft rotation axis
14 – disc brake caliper.

The axles of the wheels are connected to the carriages and the crankshaft. The axis of rotation of the crankshaft 13 is located perpendicular to the longitudinal axis of the forward motion of the carriages 4. The crankshaft has 6 sprockles on the connecting rods to transmit rotational motion. The axles of the wheels 12 are also equipped with sprocket 5 with a ratchet mechanism. The crankshaft is connected to the axle of each wheel by means of a crankshaft thrust 8 and a chain transmission 9. Thus, the rotational motion of the crankshaft is converted into the rotation of the wheels and their forward-backward movement along the longitudinal guides.
The device also contains hand levers 1. Hand levers 1 swing on hinges fixed on the frame 3. Lever swing axis – 2.
To the lower end of each hand lever 1 on the hinge is attached pedal thrust 10. At the other end of the thrust is fixed pedal 11, on which the rider stands with his foot. The thrust of the pedal 10 hinge is associated with the thrust of the crankshaft 8.
The rider acts with hand levers 1 (hands move back and forth) and pedals 11 (move along an elliptical trajectory) imitating the movements of the legs and hands that a person makes when walking. The pedals rotate back and forth. When the pedals rotate forward, the trainee moves the wheels synchronously with the legs and goes forward. When the pedals rotate back, the trainee moves the wheels synchronously with the legs but does not go.
For convenience, the trainee is equipped with auxiliary wheels in front and rear.
It is forbidden to make changes to the design of the trainee without the written consent of the manufacturer. Maintenance of the trainee is recommended to be carried out in specialized or bicycle workshops.

2. Rules of trainee control

Ellic sensual trainee, it gives new emotions from a harmonious walk on wheels, and to get used to walking on wheels you need to train.

Rule #1
The entrance to Ellic is at the rear and the exit from Ellic is at the front.
To enter Ellic, approach it from behind. Grab the hand levers and hold the brakes. Step over the frame, stand on the bottom pedal. To stand on the Ellic, always step on the bottom pedal first. The lower pedal must be stepd on to avoid pedaling backwards. Getting up on the trainee first step on the lower pedal.
To get out of Ellic, always go ahead. Pull over. Remove both brakes. Step on the crossbar under your feet and go forward. Ellic is designed so that there are no objects in front of the rider that prevent him from going forward.

Rule #2
Always stand on the pedals with two feet.
Do not tear the soles off the pedals. Combine the center of the foot with the center of the pedal. In order to avoid injuries, shoes, and even more so the bare parts of the foot (it is not recommended to ride barefoot) should not protrude beyond the edges of the pedals.

Rule #3
Ellic walks with his feet.
As in life - walk with your feet and help with your hands. If you move your legs incorrectly, you will not be able to go on your hands. Catch the balance on your feet. Ellic steps to repeat the biomechanics of the human body. The Ellic wheels move simultaneously with the rider's legs. This ensures the balance of the rider in motion. Arms and legs move synchronously.

Rule No4
If you pedal backwards, then the wheels will walk with the legs, but the Ellic will stand still.

Rule No5
The easiest start is when the front foot presses on the pedal.
It is easier to start from the foot position from the front than from the foot position from above.

Rule No6
To go easily you need to find a balance.
Do not pile on the levers and do not hang on them. As always, the balance is somewhere in between. Do not worry if you do not immediately find it - you will be insure by auxiliary wheels and the balance will definitely come with time. To go to Ellic you will have to deal with and ride with your head proudly raised.

Rule No7
For braking, always clamp both brakes at the same time to avoid twisting, stalling and falling.

Rule No8
First learn to drive straight and only then turn.
First, learn to drive straight and only then begin to learn to turn on the go. Do not be afraid that it is not possible to turn right away. First you need to get used to Ellica little. To do this, just learn to drive straight. And the slower the better. If you can take your time, you will feel your body better and learning will be easier. In the first lesson, you need to learn how to drive straight.

Rule #9
Do not rush and do not hurry.
For a full ride, you need your body to master and react itself. It is impossible to understand how to ride a bicycle, it is necessary to feel. Usually this requires from one to three classes. This is especially true of turns and slopes. Be extremely careful and collected when managing Ellic. Try to feel Ellic.

Rule No10
Walking and rolling are not the same thing.
To walk it is to move your legs. It's when the wheels are going.
You can roll and not walk. This means that the wheels can go even if you don't move your legs. For example, coasting or down the slide.
But you will not be able to walk (move your legs) forward on the spot. Ellic will go ahead. It's like a regular bike.

Rule No11
You can't walk and turn at the same time.
You can roll and turn at the same time. To turn you need to roll and not walk. That's the hardest rule. But having mastered it, you will not be stopped.

Rule No12
The closer the wheels are aligned, the easier the turn.

Rule #13
Ellic can turn in place.

Rule No14
Ellic can walk backwards

Rule No15
Levers can not be steered, but you can steer.

Rule No16
Do not make excessive efforts.

Ellic moves pretty easily. If you make uncomfortable efforts for yourself, then you are doing something wrong. Relax a little and think about what you do and which of the rules you do not follow.

Rule No17
You can't just take and learn all the rules at once.

How do I rotate?
There are several ways to turn on Ellic. Here they are listed as the complexity increases.

1. Turn in place without movement.
2. Turn in motion.
3. Steering with manual levers on the go.
4. Turning from the start with a platoon of pedals.

Let's consider ways to rotate in order.

1. Turn in place without movement. Necessary for beginners, as it allows you to get out of deadlock situations without leaving Ellic. In the future, when you master the turn in motion, this method will be used only in rare cases.
   - Move the pedals back put your feet apart so that the back is the foot in which direction you want to turn.
   - Squeeze both brakes.
   - Without releasing the brakes, take a step back (scroll the pedals back half a full turn). Ellic will rotate around its axis and the hind leg will move forward.
   - Release the brakes and look around.
   - If the rotation angle is insufficient, then repeat the cycle.

2. Turn in motion.
   - You can roll and turn at the same time, but you can not walk and turn at the same time. That's the hardest rule. But having mastered it, you will not be stopped.
   - Ellic turns best when the axles of the wheels are aligned. The farther apart the wheels are placed, the greater the turning radius and the lower the responsiveness to the control effect. Control the alignment of the wheels before turning. At first it will seem complicated, but after a few repetitions you will bring it to automatism.

   To turn on the go you need:
   - Dial a small speed (you can quickly, but enough and small);
   - Stop walking;
   - Combine the axles of the wheels;
   - To turn right (left) press the right (left) brake.
   - Control the speed, remember that the lower the speed the safer the maneuver. Learn and make turns at the safe speed of your leisurely walking.

3. Steering with manual levers on the go.

   To shift the course of movement of the trainee on the move to the right, you need to pull the right lever with additional effort.

   To shift the course of movement of the trainee on the move to the left, you need to pull the left lever with additional effort.
   - Do not tear the sole from the pedals and do not transfer the weight of the whole body to the upper pedal and the far lever. These actions increase the height of the Ellic center of gravity with the rider and, if controlled inexperiencedly, can lead to rollover.
   - It is not recommended to use this technique for turns in the first lesson.

4. Turning from the start with a platoon of pedals.

- To turn left, place the lever of your left hand forward and the right back.
- With the application of force, pull the left lever back, and push the right lever forward with force.
- Simultaneously create the added force on the front pedal.
- Look for a position in which the levers and pedals create maximum torque. Usually such a moment is created when the upper pedal has already passed the extreme upper point but has not yet reached the extreme front point.
- Passing segments of the maximum torque by turning the pedals back, return the levers to the maximum torque position.
- Do not tear the sole from the pedals and do not transfer the weight of the whole body to the upper pedal and the far lever. These actions increase the height of the Ellic center of gravity with the rider and, if controlled inexperiencedly, can lead to rollover.
- It is not recommended to use this technique for turns in the first lesson.

How do I step back?

Ellic can step backwards. To do this, you need to pedal (walk) back and alternately clamp the left and right brake, as if clinging to the road with your back foot and push it forward.

Let's go through the points:

1. Stand up so that the right leg is behind. You can set this position in place by scrolling the pedals back.
2. Clamp the right brake. Without releasing the brake, take a step back (scroll the pedals back half a full turn), until the right foot is in front.
3. Release the brake.
4. Ellic takes a step back and the left leg is behind.

We do the same for the other leg.

1. Clamp the left brake. Without releasing the brake, take a step back (scroll the pedals back half a full turn), until the left leg is in front.
2. Release the brake.
3. Ellic takes a step back and the right leg is behind.

Repeat as many times as necessary.

Exercises for learning

1. Stand on the engine (remember the lower pedal?)

alternately lean on the front and rear auxiliary wheels. Repeat 10 times.
Pedal back. Do you feel the wheels following your legs?

2. As in walking, you have 4 beats of movement. For simplicity - choose your favorite leg.

Slowly pedal back. Pay attention to the beats
Favorite leg below
Favorite leg in front
Favorite leg on top
Favorite leg behind.

We're close to trying a ride. But first, try swinging forward backwards in each different position. The back is straight, balance with your legs. You are ready to go if you can let go of your hands and stand flat on your feet.

3. Let's start.

To do this, we work with our feet. 90% of the energy to the movement is given by the legs. It is better to start going leaning on the front auxiliary wheel. If you can't move- stop. Think about what you're doing wrong. Without stopping the contact of the front auxiliary wheel with the ground, scroll the pedals back. Stop the rotation in different positions and try to catch the moment of start.

Don't try to wrest leverage. Don't hang on the levers. The application of excessive effort to the levers shifts the balance and turns the Ellic. Ellic is like walking - moves with your feet.
If you put in an effort and Ellic doesn't respond or go, then you're doing something wrong.
Excessive efforts do not need to be applied.
If you feel like you're putting in a hell of an effort, stop.
Think about what you're doing.
To reset the impressions - scroll back the pedals.

4. Exercises for straight skating. Repeat each exercise 3 times.

Take two steps, stop walking and keep rolling.
Take two steps, put your right foot down, stop walking and keep rolling.
Take two steps, put your left foot down, stop walking and keep rolling.
Take two steps, stop walking, keep rolling, without stopping, pedal back.

Attention!
Do not accelerate until you feel how the trainee is controlled. Avoid sudden braking and cornering. In the first lessons, it is not recommended to move down from the slides. Remember that on Ellic you ride a horse and are responsible not only for yourself but also for others.

How to adjust the brake pads?
Disc mechanical brakes are installed on your trainee, from time to time it is necessary to check the position of the brake pads relative to the brake disc.
Disc mechanical brakes have one fixed pad and one movable pad driven by a brake cable from the brake handle. Both pads and the mechanical disc brake housing are subject to position adjustment. You should start with adjusting the latter.
1. Loosen the mounting bolts that attach the brake body to the carriage;
2. Insert the brake housing so that the brake disc passes strictly along the center of the slot in the brake housing;
3. Tighten the mounting bolts, preventing distortion of the brake body;
4. By adjusting on the inside of the brake housing, place the fixed brake pad at the minimum distance to the brake disc, but not allowing it to be touched by the disc.
5. By adjusting on the outside of the brake housing, similarly set the movable brake pad so that the clearance is not more than 1 mm.
6. Check the brake operation. Full pressing of the pads to each other (through the brake disc)
7. Adjust the idle stroke of the handle with a rotating screw on it.
A properly adjusted mechanical disc brake should confidently stop the bike when pressing the brake handle and at the same time not prevent the rotation of the brake disc when the brake handle is released. It is permissible to lightly touch the disc with pads, if this does not cause tangible braking of the wheel. Hydraulic sled brakes are higher adjusted for the type of brake drive and the fact that most hydraulic disc brakes have two self-priming movable pads. Fine-tuning the position of the brake body and, accordingly, the brake pads on the hydraulic brakes, as well as pumping the brakes, is better to entrust to a qualified mechanic.

4. Basic safety rules during the operation of the trainee

3.1. Riding on the trainee is associated with a certain risk and increased danger. To minimize the risk, we kindly ask you to adhere to the Rules of the Road, as well as to comply with the basic safety requirements associated with the specifics of movement on the trainee. It should be understood that there are no such precautions with which it was possible to eliminate any risk.
3.2. We strongly recommend the use of bicycle gloves with a special lining on the palm of your hand. They will protect your palms from injury in case of an accidental fall and, in addition, will provide a more

reliable grip of the levers and reduce vibrations passing from the ground through the parts of the trainee to the hand levers.
3.3. Do not ride on the trainee, listening to music or other audio signals through headphones, as in this case you will not be able to quickly monitor the situation around you by ear. Departure on the trainee on public roads is not allowed.
3.4. Make sure that the brakes of the trainee work efficiently, and always maintain your trainee in good technical condition. When braking, control the braking force, preventing excessive braking. Try to brake with the same intensity with both brakes.
3.5. Watch for potholes, ditches and other dangerous objects on the road. In case of sudden detection of an obstacle on the road, in no case do not go around it on the left, so as not to interfere with traffic participants. Remember: a bicycle, scooter or car approaching from behind, most often not able to change direction quickly enough to avoid a collision with a sharply shifted to the side of the object in front.
3.6. When riding on the trainee, wear bright, noticeable clothes. This will make you much better visible to other road users. In most cases, the driver, noticing an obstacle in advance, will do everything possible to overtake him as safely as possible. Clothing should not constrain movements, while it should not be very spacious in order to avoid getting or winding its parts in the moving parts of the trainee: stars, connecting rods, spokes, rods, carriages. We advise you to buy specialized clothes for training in the appropriate stores.
3.7. It is strictly forbidden to dismantle reflectors (cataphotes) from bicycles. The trainee should have a front reflector of white color, rear - red and side - yellow.
3.8. Transport the trainee through public roads, railway or tram tracks only in dismounts and at right angles.
3.9. Riding on the trainee at night or in conditions of limited visibility (in the dark, in fog, in the rain, at dusk) is extremely dangerous and imposes additional requirements on the rider. We recommend you to refrain from skiing in such conditions. We also draw attention to the fact that skiing in the dark without additional lighting equipment (lanterns, beacons) is especially dangerous, and in most European countries it is prohibited by law. If you use lighting equipment powered by batteries, then before the trip make sure that it is serviceable, as well as that the batteries (accumulators) are fully charged.
ATTENTION! The risk of injuries and accidents increases with improper use of the trainee, namely:
- jumping on the trainee;
- riding on branches, tree roots, garbage or other obstacles;
- performing tricks on the trainee;
- fast riding, participation in races or downhill (downhill);
- riding in an unusual way;
- emergency braking, including one brake;

All of the above are examples of improper use, which increases the load on all parts of the trainee. High load can cause breakdown, which can increase the risk of injury and injury. To reduce the risk of injury and accidents, do not allow the above types of operation.

3.10. Skiing in rainy weather or in conditions of high humidity
Remember that in wet weather, the brakes lose some of their efficiency, so always consider this when driving. It should also be remembered that a wet road is more slippery than dry, so when driving on a wet or wet road, control your speed, avoid sharp maneuvers and sudden braking. Be especially careful when crossing railway or tram tracks, public roads, metal surfaces, road markings, which in wet weather are especially slippery.
3.11. Cross-country skiing, as well as in places of rest
The growing popularity of individual means of transport causes additional requirements for riders riding in parks, recreation areas, ski and other trails. We strongly recommend that you follow the following requirements:
Carefully monitor the road and adequately respond to the appearance of other road users on it, whether they are pedestrians, cyclists, scooter riders or horses. Avoid conflict situations, reduce speed when overshooing or driving with other road users;
Do not violate the boundaries of private property, or fenced areas;

When overstaying or riding with riders on horseback, observe a sufficient distance to the horse. Remember, the horse is not accustomed to the sight of riders training on mechanical means and can be frightened. A frightened horse can cause serious injuries to both the rider and the object that frightened it, as well as other road users, including pedestrians;
3.12. Control your speed depending on road conditions and your experience. Do not allow acceleration to speeds at which you risk losing control of the trainee. This is especially true of descents and turns on the go. Remember that in the initial stages of training, until you have mastered the intuitive control of the trainee, a relatively safe speed is comparable to your walking step.
Pay special attention and caution to movement on inclined surfaces. Remember that the force of inertia is directly dependent on the mass of the rider and the speed developed. With a set of speeds, the force of inertia will complicate the management of the trainee. Therefore, moving on inclined surfaces, keep your hands on the levers and slow down with two brakes at the same time. Starting to descend on the surface with an angle exceeding 3%, take precautions, make sure that the brake system is working and stop the trainee completely at the very beginning of the descent to feel the work of the trainee and brake system. For braking, do not use the brakes separately, but only simultaneous pressing. Press and release the brakes smoothly. Remember that when braking to a complete stop on an inclined surface face down, as soon as you release the brakes, you will again go forward without making any effort.
Therefore, gradually releasing the brakes, go down carefully. It is not recommended to descend on inclined surfaces at speeds above 3 km / h.
Remember that the trainee is controlled using the braking system, and the trainee with a rider who has gained speed above a calm foot step has a force of inertia that, when maneuvering, can lead to loss of control, fall and serious injuries.
For a safe turn when descending on an inclined surface, it is recommended to stop the trainee by pressing two brakes until it stops completely. After that, carefully release one brake, and continue to hold the one in which direction you want to turn. If you do not want to further accelerate the trainee, especially when descending on an inclined surface, try to step not forward, but backward. Stepping back will allow you to take a more comfortable position on the trainee and not give additional impetus to the movement.
increases with a set of speed increases the force of inertia.
3.13. We strongly recommend that you wear a helmet and gloves for any skating, and in conditions of high-speed skating - a set of additional body protection: elbow pads, patniks, spine protection (shell);
For long autonomous trips outside the settlements, make sure that the trip is safe and that emergency communication with the rescue services is possible. Try not to go on long trips alone.

4. Basic rules of operation of the trainee
Attention! In order to avoid technical problems, you need to adhere to the following rules of operation of the trainee:
4.1. Keep your trainer clean. After riding in dusty, wet or dirty conditions, be sure to wash the trainee, paying special attention to the cleanliness of the chain, stars. Avoid directing the flow of water into the area of movable joints (auxiliary wheel columns, suspension hinges, wheel bushings).
4.2. After washing the trainee, as well as after riding in conditions of high humidity, be sure to wipe the chain dry, and then lubricate. As a lubricant, use specialized lubricants for bicycle chains. The lubricated chain should be kept alone for 5-10 minutes for the penetration of the samzka, and then wipe dry to avoid sticking dirt and dust. It is forbidden to use thick lubricants of all types (Litol, Citam, etc.) for lubrication of chains.
4.3. It is forbidden to immerse the trainee in water to a depth reaching the articulated suspension joints in the bearings of the hubs. If this happens, it is necessary to visit a specialized workshop as soon as possible, where a qualified mechanic will sort out the bushings for a new lubricant and remove the remaining water. It is also recommended after "bathing" the trainee to make sure that there is no water between the tire and the rim. The liquid can penetrate there through the spoked holes in the rims.
4.4. After 1-2 rides or no later than 14 days from the date of purchase of the trainee, you must contact the service center (or the official dealer who provides maintenance of the trainees) for test maintenance. In the future, it is recommended to carry out maintenance at least 1 time per year. Allowed natural backlash of articulations of pedals, handles, rods of connecting rods of speakers of

auxiliary wheels and wheel hushes, backlash of connecting rods relative to the axis of the crankshaft, crunches and any other metal sounds when the bike moves. If in the sid of these reasons there was a drop in the efficiency of the brakes or also difficult management of the trainee, you should contact a specialized workshop to configure the trainee.
Further operation of the trainee with the above malfunctions can lead to the breakdown of other parts of the trainee, as well as injuries, injuries, etc. for the owner of the trainee.
4.5. Do not use the trainee for other purposes. Remember that the trainee is designed for individual training of medium intensity for one person. Do not use the trainee for downhill or in situations that may lead to its disbalance. Also remember that the use of the trainee in modes associated with increased loads on the nodes of the trainee, including in competitions or for the purpose of periodic training of inexperienced riders in the skills of riding on the trainee, deprives you of warranty support from the manufacturer.
4.6. Avoid mechanical blows to the trainee, its rolls over and falls. Modern frames made of aluminum alloys have a very small wall thickness and are subject to mechanical deformations. Attention: IT is STRICTLY forbidden to ride on the trainee, the frame, wheels, suspension levers, handles and controls of which have mechanical damage! Immediately take the trainee (without getting into it) to the service workshop to eliminate breakdowns.

5. Warranty Information only for Russian Federation

The trainee must be transferred to the buyer in a fully assembled form, with pre-sale preparation in the store (trade organization of the official dealer). In case of transfer to the buyer of the trainee in disassembled or partially disassembled form (including in the box), the manufacturer has the right to cancel the warranty. In case of non-compliance by the buyer with all the above rules of operation of the trainee, it is possible to refuse to provide warranty service.
The service life of the trainee is 5 years.
Terms of the guarantee. The warranty is provided only for new trainees and frames purchased from an authorized dealer's trade organization, as well as pre-sale training. The manufacturer (represented by the trade organization of the official dealer or directly), during the warranty period, provides replacement of components and parts of trainees in case of detection of defects of a manufacturing nature, subject to the rules of operation of the products and the absence of traces of mechanical damage on them for similar of proper quality. In the absence of the seller's stamp and the date of sale in the warranty card, quality claims are not accepted. 1. Trainees sold by an authorized dealer are not subject to warranty service in the following cases: a. normal (natural) wear of components and parts (applies to all movable elements of the trainee design: bearings, as well as gearshift mechanisms); b. consequences of an accident or traffic accident (including falling on the trainee); c. operation of the trainee in an unintended mode (as a cargo transport, as well as in any other way that does not correspond to the purpose of the product as a personal trainee); d. negligent treatment that led to a reduction in the life or failure of the trainee or its individual components; e. consequences of improper assembly, adjustment, repair or maintenance carried out independently or by persons who do not have authority to carry out these works. 2. Warranty obligations do not apply to cases of mechanical damage to the frame, chipping of the paintwork or deformations of other components of the trainee caused by mechanical action. 3. Warranty obligations do not apply to tires, cameras, wheel rims, shift cables and brake drives, brake pads, chains, grips, pedals, front and rear transmission stars, bearings, rear derailleur mounts, oil seals, dust motes, rubber seals, any plastic or rubber moving or rubbing parts, bolts and nuts, fork foot surfaces, brake and wheel mounting points, as these components are particularly susceptible to wear and require periodic replacement. The service life of all the above-mentioned parts and assemblies is determined by the conditions and intensity of use of the bike. Warranty obligations for trainees, frames and components do not apply to the consequences of using the trainee in winter, at temperatures below 0 ° C or in the rain, as well as full and partial immersion of components in mud. 4. Warranty obligations do not apply in cases of interference by the owner in the design of the trainee, replacement of components of his choice and modification of those installed by the manufacturer without the written consent of the manufacturer. 5. Warranty obligations are invalid if the trainee is used in stunt, sports competitions, ramp jumps, acrobatic exercises or other similar particularly harsh

operating conditions, as well as during rental (rental, etc.). 6. The warranty is provided by the manufacturer, provided that the owner of the trainee will timely carry out maintenance of the bike at an official dealer or in specialized service workshops authorized to carry out the necessary maintenance work. 22 Warranty period of 1 (one) a year applies to the frames of the Ellic Raptor trainee and 6 (six) months for components (except as specified in paragraph 3 of this section and guarantees the absence of defects that occurred during the production process. In the presence of defects falling under the scope of this warranty, the manufacturer undertakes to replace or repair the frame and components at its own expense. The guarantee is provided in the presence of the original document confirming the fact of purchase (cash or product receipt). The warranty period is calculated from the date of purchase of the bike from an authorized representative of the manufacturer. Transportation costs are not covered by this warranty. 7. Warranty obligations apply only to the first owner, since initially the trainee is begged taking into account the biometric data of the buyer. The warranty card for the trainee is a personal document and is not subject to corrections and reissue to another person. 8. Covering the costs associated with the transportation of products is not included in the manufacturer's warranty obligations. The manufacturer's warranty representative at the points of sale is an official dealer or a person who has the status of an official dealer of Ellic trainees. 9. The manufacturer's warranty applies only to trainees sold by official dealers or persons (individual entrepreneurs) who have the status of an official dealer of Ellic trainees.

Attention! If the trainee does not match the biometric data of the buyer (see the dimensions of the trainee rider), the manufacturer is not responsible for causing harm to the health and life of the buyer. Trainees for customers over 190 cm tall and weighing more than 100 kg should be selected only with the help of specialist consultants in the stores of official dealers or persons with the status of official dealers of Ellic trainees, because not all models can withstand increased loads. ATTENTION: the buyer of the trainee is fully responsible for bodily injury, material damage or breakdown of the trainee (or its components) and causing any other damages in cases where the trainee was used in competitive events. The list of such includes any type of competitions, both having official status and not having it: cross-country racing, freestyle, ramp jumping, downhill (including biker cross and dual slalom), road racing, orienteering, multisport racing.THE WARRANTY PERIOD FOR COMPONENTS IS 6 MONTHS, FOR FRAMES 1 YEAR.

Manufacturer and manufacturer of the Ellic trainee is www.Ellic.bike LLC "Dvij.tech".
The list of works on pre-sale preparation:
1. Unpacking the trainee, checking the completeness.
2. Installation of wheels.
3. Installation of handles.
4. Pedal installation
5. Adjustment of the position of the brake levers.
6. Installation of front and rear reflectors.
7. Installation of chains.
8. Filling in the warranty card.
9. Checking the tightening moments of threaded connections in the main components of the trainee: handles - carriages - wheels - connecting rods - pedals
Note: The scope of work on the pre-sale preparation of a particular model of the trainee should correspond to its completeness.

Warranty card

Information about the trainee

Model / Decimal number __

Frame serial number __

Place of sale ___

Date of sale __

Seller's signature __

I have familiarized myself with the terms of warranty service, I have no claims for the selection of the size.

Name and Signature of the buyer __

Mark on pre-sale preparation

Filled in by the official representative of the manufacturer. The trainee is prepared for operation:

Company name __
Position __
Name __
signature __
date __

Register your trainee in the global registry www.Ellic.bike

ELLIC