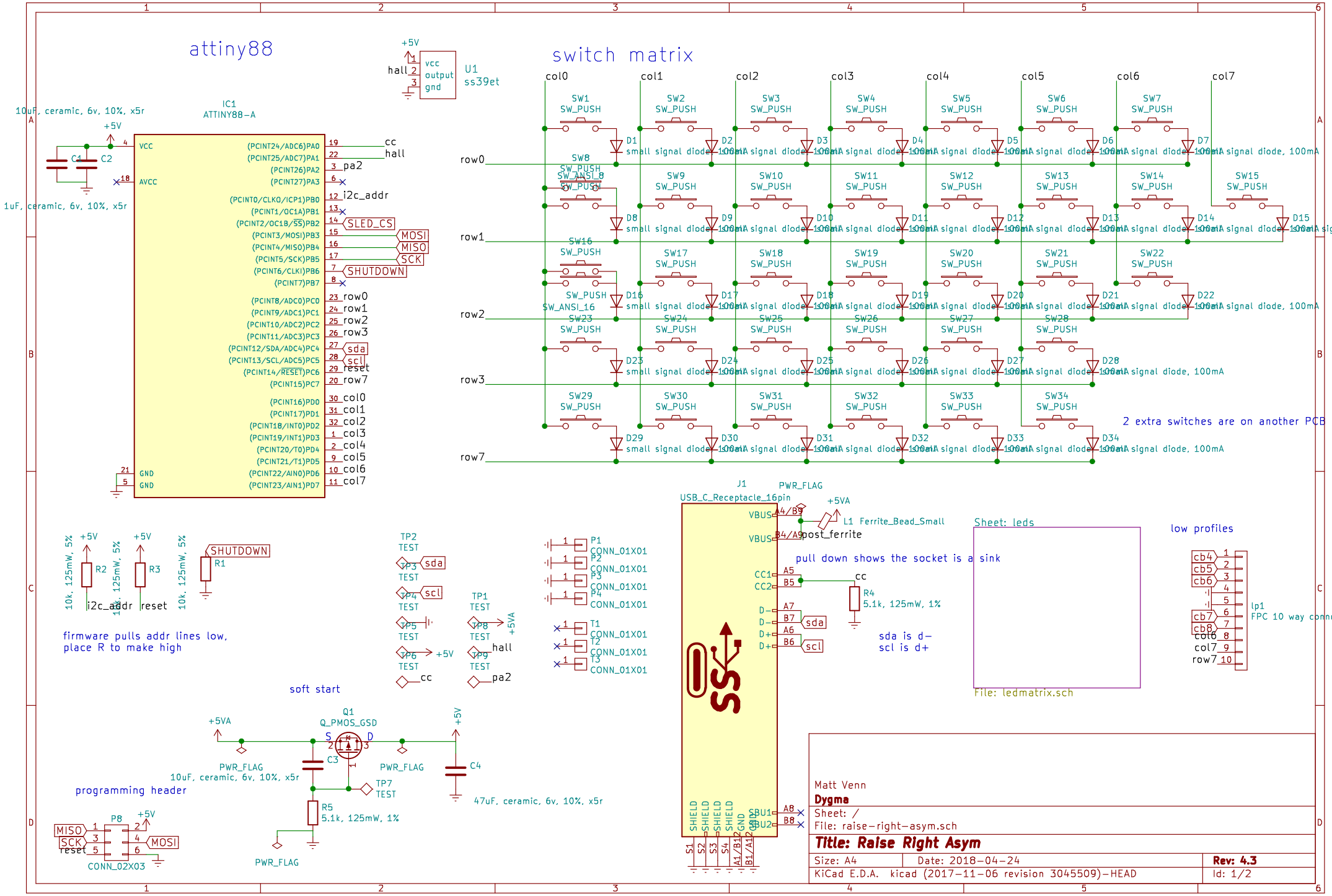
attiny88
IC1
ATTINY88-A
switch matrix
U1
ss39et
vcc
output
gnd
hall
+5V
10uF, ceramic, 6v, 10%, x5r
1uF, ceramic, 6v, 10%, x5r
C1
C2
VCC
AVCC
GND
(PCINT24/ADC6)PA0
(PCINT25/ADC7)PA1
(PCINT26)PA2
(PCINT27)PA3
(PCINT0/CLKO/ICP1)PB0
(PCINT1/OC1A)PB1
(PCINT2/OC1B/SS)PB2
(PCINT3/MOSI)PB3
(PCINT4/MISO)PB4
(PCINT5/SCK)PB5
(PCINT6/CLKI)PB6
(PCINT7)PB7
(PCINT8/ADC0)PC0
(PCINT9/ADC1)PC1
(PCINT10/ADC2)PC2
(PCINT11/ADC3)PC3
(PCINT12/SDA/ADC4)PC4
(PCINT13/SCL/ADC5)PC5
(PCINT14/RESET)PC6
(PCINT15)PC7
(PCINT16)PD0
(PCINT17)PD1
(PCINT18/INT0)PD2
(PCINT19/INT1)PD3
(PCINT20/T0)PD4
(PCINT21/T1)PD5
(PCINT22/AIN0)PD6
(PCINT23/AIN1)PD7
cc
hall
pa2
i2c_addr
SLED_CS
MOSI
MISO
SCK
SHUTDOWN
row0
row1
row2
row3
sda
scl
reset
row7
col0
col1
col2
col3
col4
col5
col6
col7
SW1 SW_PUSH
SW8 SW_PUSH SW_ANSI_8
SW16 SW_PUSH SW_ANSI_16
SW15 SW_PUSH
D1 small signal diode, 100mA
D8 small signal diode, 100mA
D16 small signal diode, 100mA
D15 small signal diode, 100mA
D22 small signal diode, 100mA
D28 small signal diode, 100mA
D34 small signal diode, 100mA
2 extra switches are on another PCB
R2
R3
R1
10k, 125mW, 5%
firmware pulls addr lines low,
place R to make high
TP2 TEST
TP3 TEST
TP4 TEST
TP5 TEST
TP6 TEST
TP1 TEST
TP8 TEST
TP9 TEST
P1 CONN_01X01
P2 CONN_01X01
P3 CONN_01X01
P4 CONN_01X01
T1 CONN_01X01
T2 CONN_01X01
T3 CONN_01X01
J1
USB_C_Receptacle_16pin
PWR_FLAG
+5VA
L1 Ferrite_Bead_Small
post_ferrite
VBUS
CC1
CC2
D-
D+
R4
5.1k, 125mW, 1%
pull down shows the socket is a sink
sda is d-
scl is d+
SHIELD
S1
S2
S3
S4
A1/B12
B1/A12
SBU1
SBU2
Sheet: leds
File: ledmatrix.sch
low profiles
lp1
FPC 10 way connector, 0.5
soft start
Q1
Q_PMOS_GSD
C3
C4
R5
5.1k, 125mW, 1%
TP7 TEST
47uF, ceramic, 6v, 10%, x5r
programming header
P8
CONN_02X03
Matt Venn
Dygma
Sheet: /
File: raise-right-asym.sch
Title: Raise Right Asym
Size: A4
Date: 2018-04-24
Rev: 4.3
KiCad E.D.A. kicad (2017-11-06 revision 3045509)-HEAD
Id: 1/2

common anode type 3 matrix

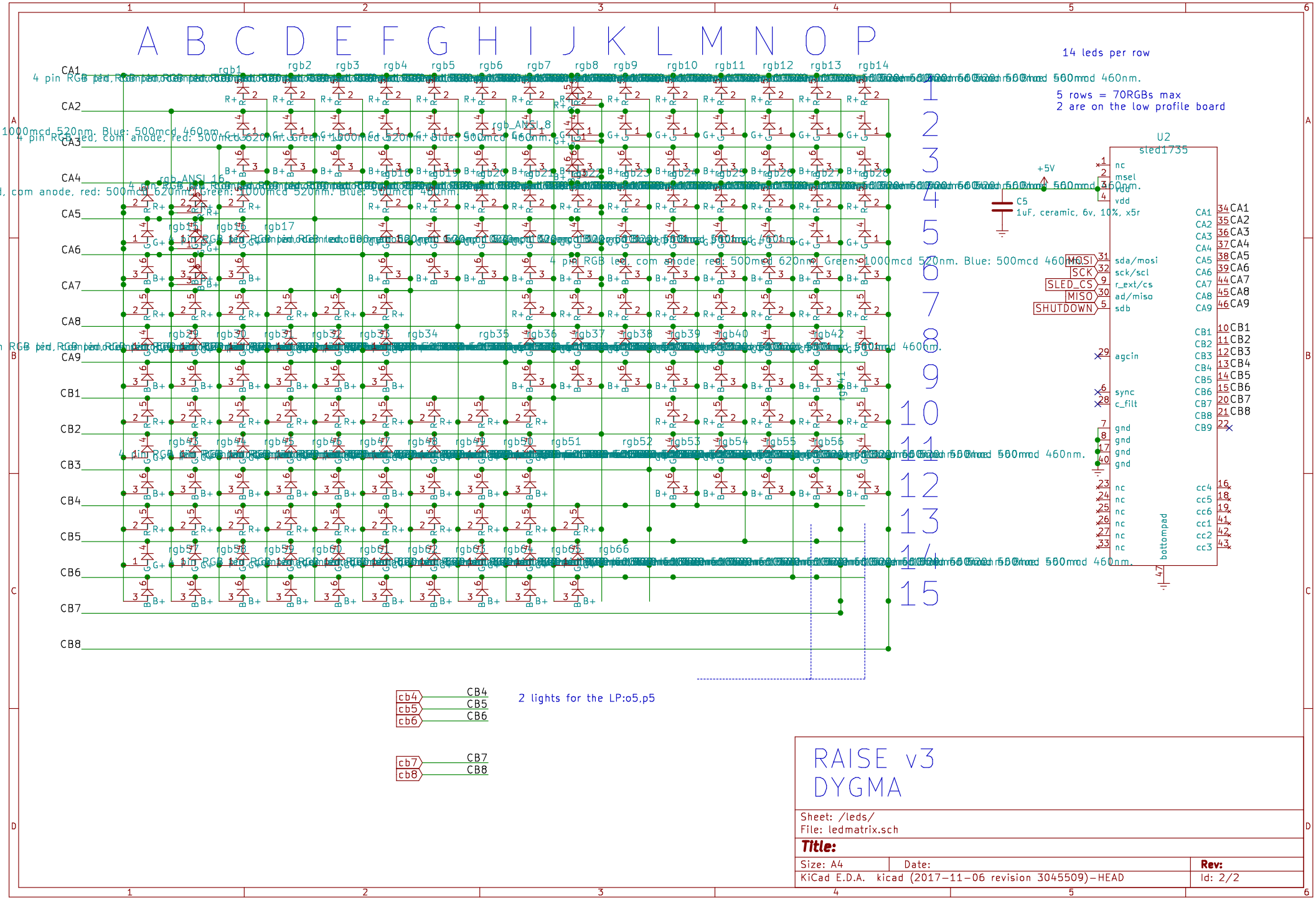

RAISE v3
DYGMA

Sheet: /leds/
File: ledmatrix.sch

Title:

Size: A4	Date:	Rev:
KiCad E.D.A. kicad (2017-11-06 revision 3045509)-HEAD		Id: 2/2