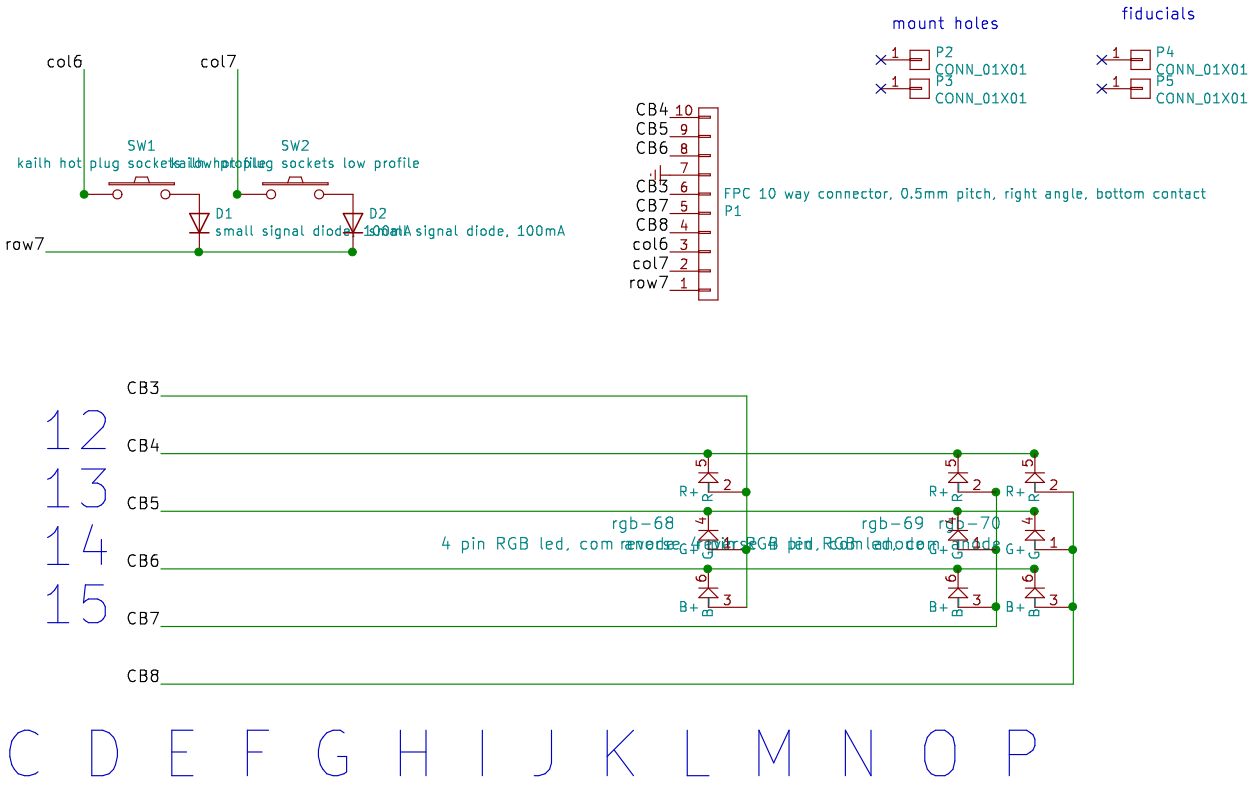

Sheet: /
File: right-lp.sch

Title:

Size: A4	Date:	Rev:
KiCad E.D.A. kicad (2017-11-06 revision 3045509)-HEAD		Id: 1/1