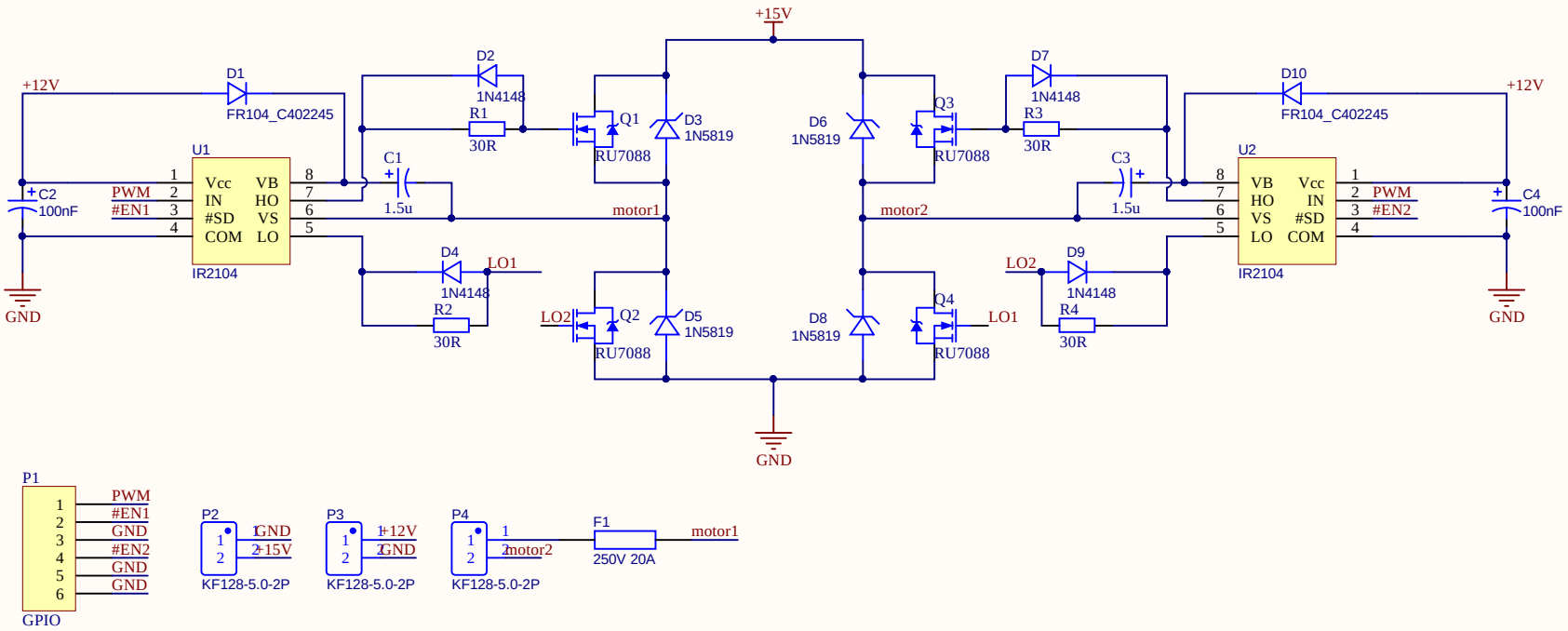

Title		
Size A4	Number	Revision
Date: 2020/6/17		Sheet of
File: D:\documents\..\电机驱动.SchDoc		Drawn By: