Board Connections

Voltage Regulation

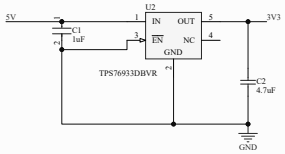

Power and Comms Connections

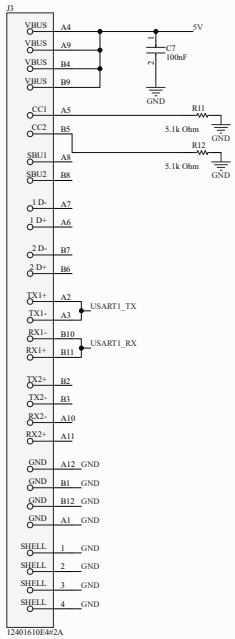

Switch Layouts

Port 1: Cal Standards

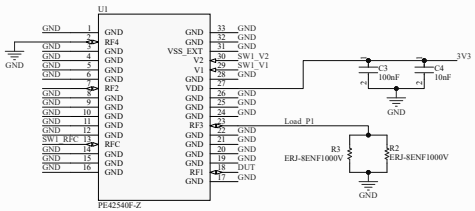

Microcontroller Connections

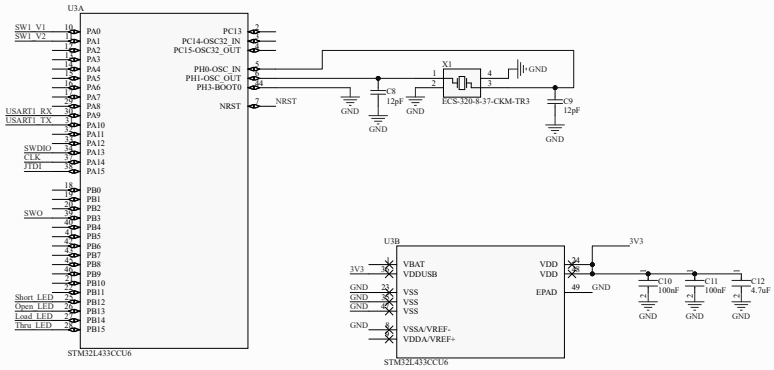

LEDs

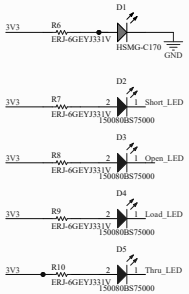

Programmer Connections

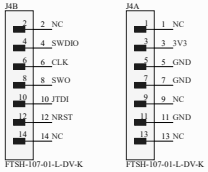

Title	Inline Automatic Calibration Device	
Size A2	Number T001	Revision 4.5
Date: 10/01/2024		Sheet of
File: C:\Users\...\Version3_ThesisCal_SISD.SchDoc		Drawn By: Dylan Fleming

Board Connections

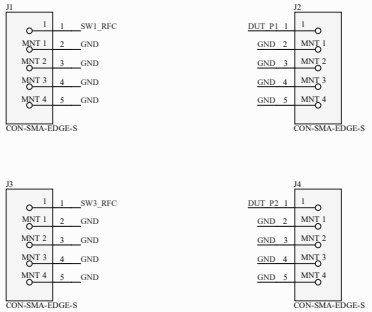

Voltage Regulation

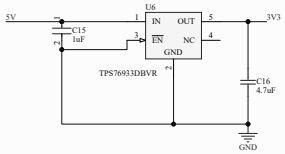

Power and Comms Connections

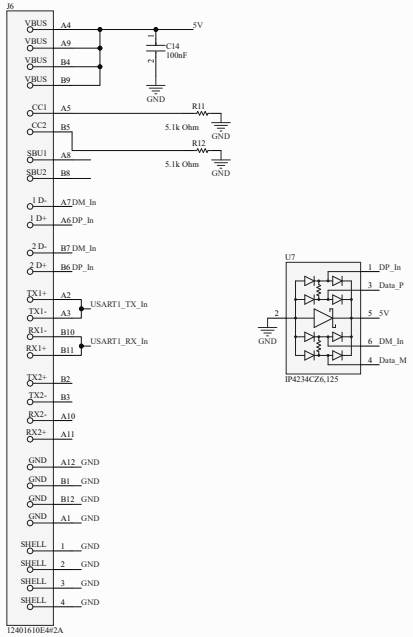

Switch Layouts

Port 1: Cal - DUT

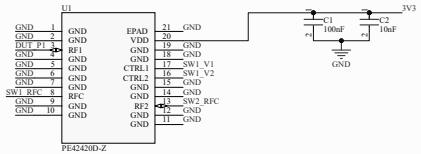

Port 2: Cal - DUT

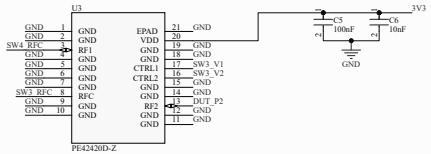

Port 1: Cal Standards

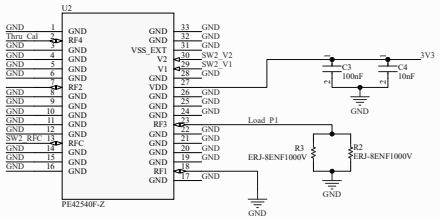

Port 2: Cal Standards

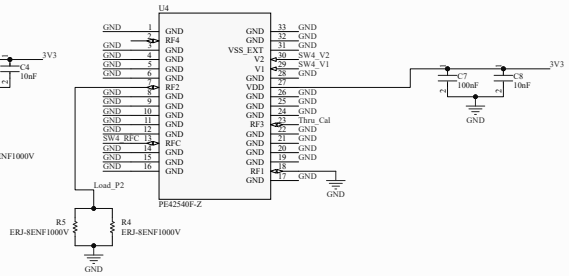

Microcontroller Connections

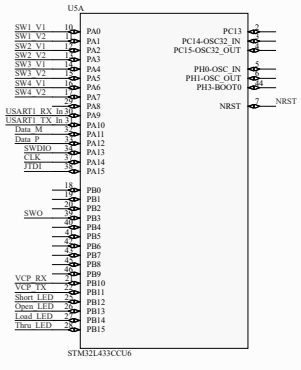

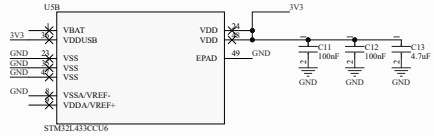

LEDs

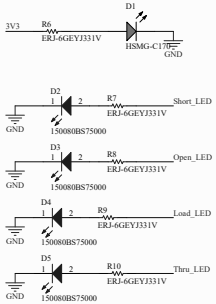

Programmer Connections

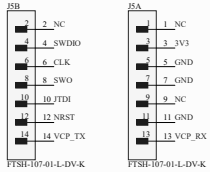

Title	Inline Automatic Calibration Device		
Size A2	Number T001		Revision 5
Date: 10/01/2024		Sheet of	
File: C:\Users...\DIDO_V4.SchDoc		Drawn By: Dylan Fleming	