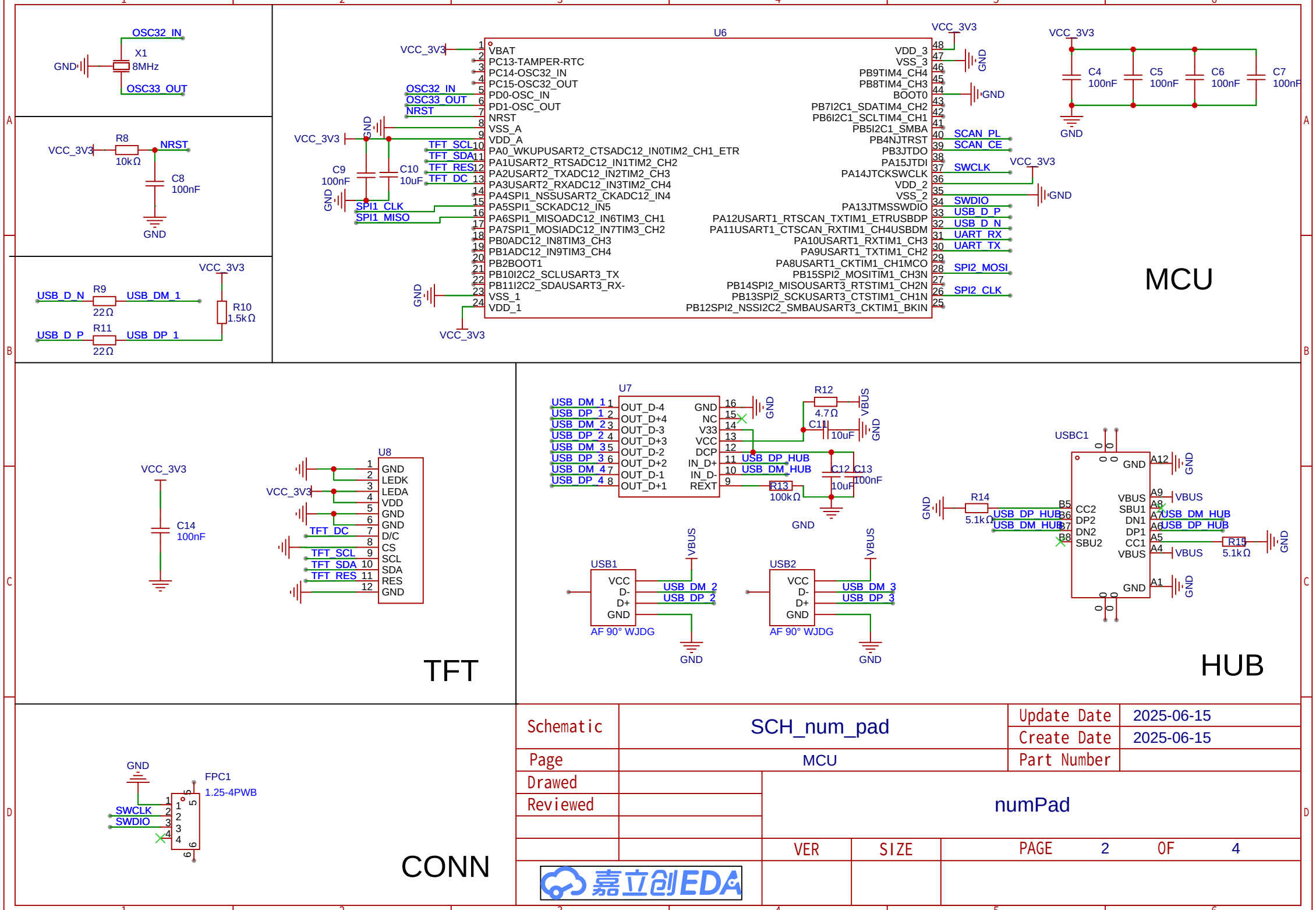

Schematic	SCH_num_pad	Update Date	2025-06-15
		Create Date	2025-06-15
Page	MCU	Part Number	
Drawed	numPad		
Reviewed			
	VER	SIZE	PAGE 2 OF 4

嘉立创EDA