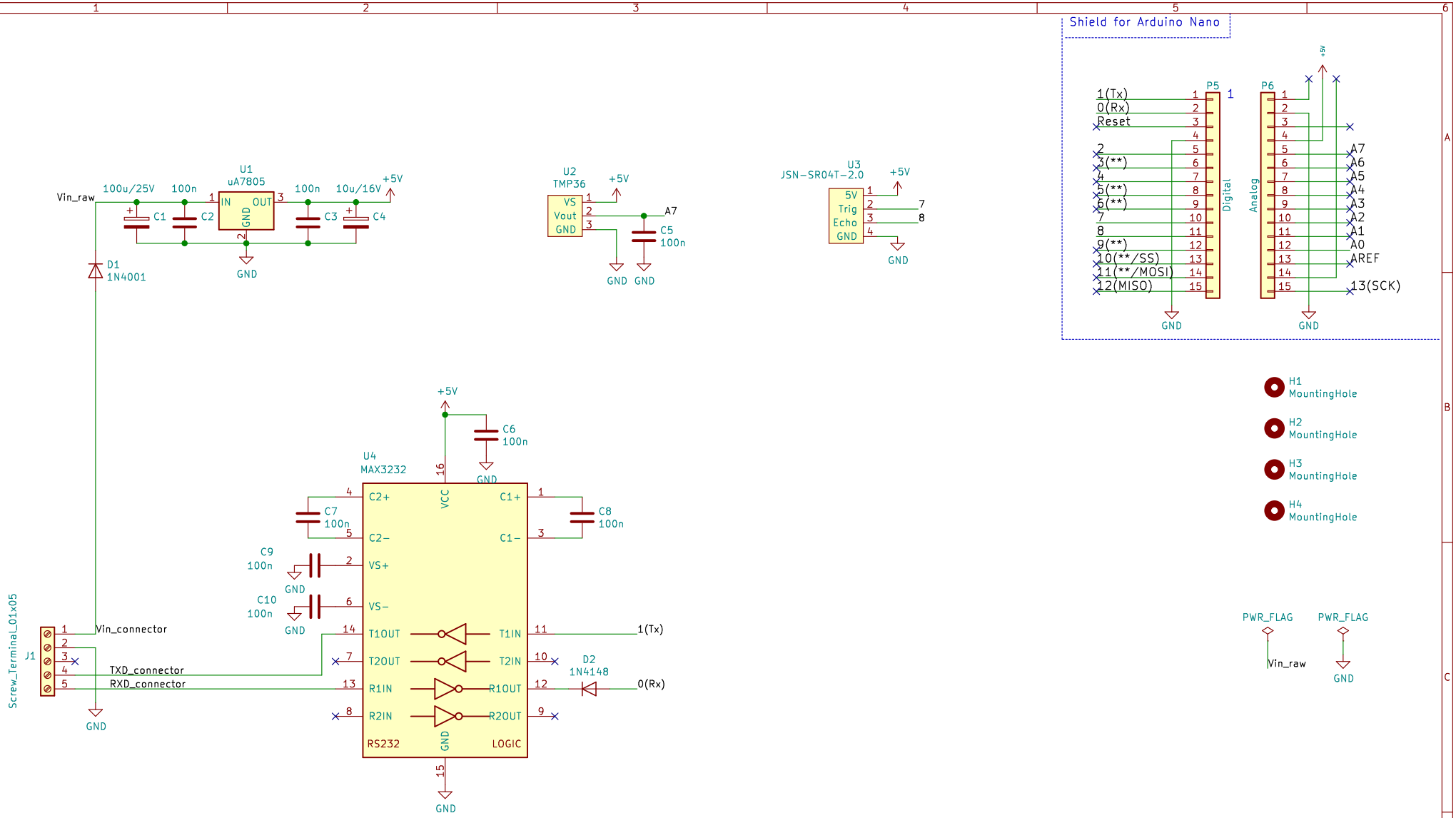

Sheet: /
File: transmitter.sch

Title: Water level transmitter

Size: A4	Date: 2020-02-12	Rev:
KiCad E.D.A. eeschema (5.1.4)-1		Id: 1/1