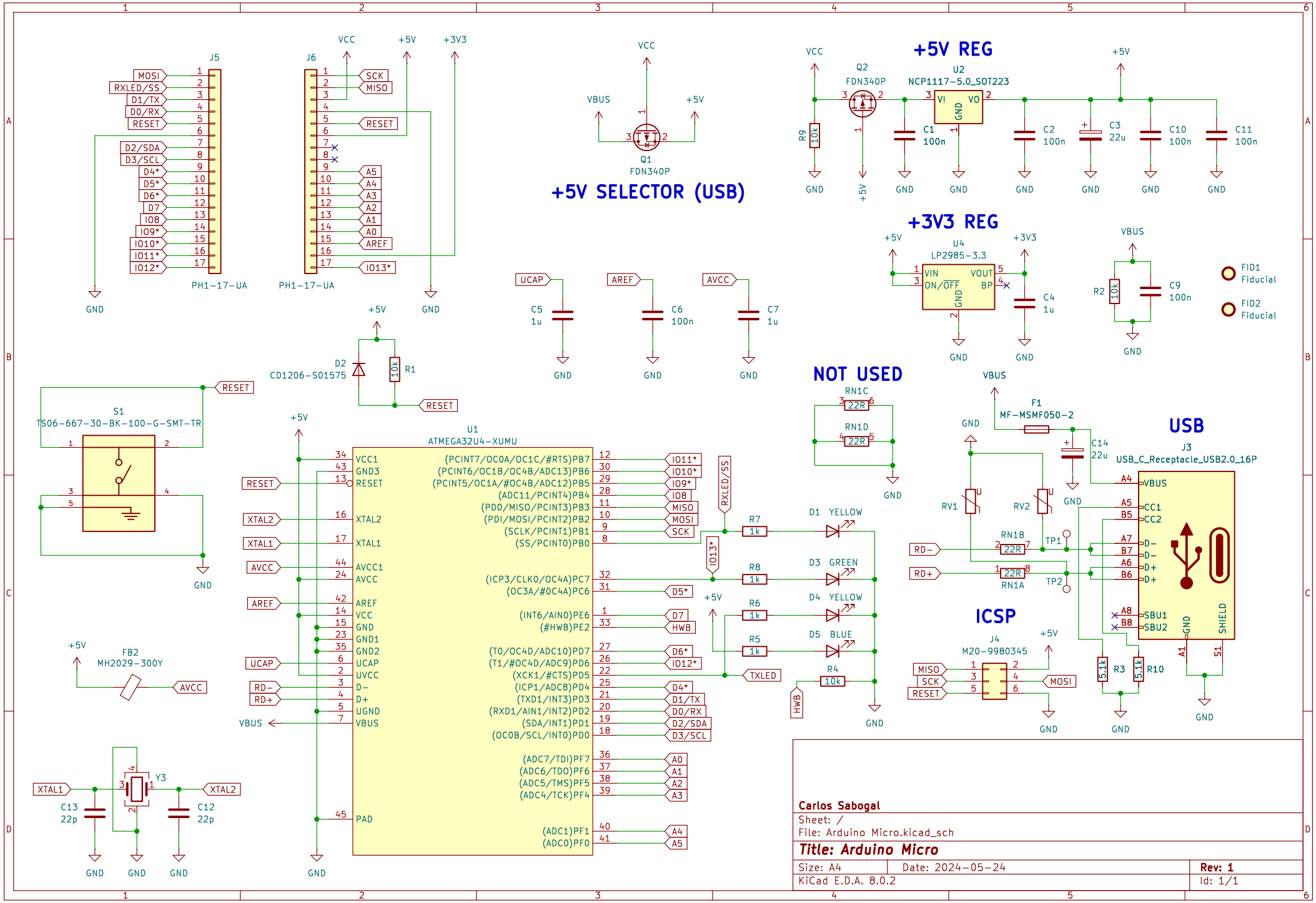
+5V REG
U2
NCP1117-5.0_SOT223
Q2
FDN340P
R9
10k
C1
100n
C2
100n
C3
22u
C10
100n
C11
100n
+5V SELECTOR (USB)
Q1
FDN340P
VBUS
+3V3 REG
U4
LP2985-3.3
VIN
ON/OFF
VOUT
BP
C4
1u
R2
10k
C9
100n
FID1
Fiducial
FID2
Fiducial
J5
PH1-17-UA
J6
PH1-17-UA
MOSI
RXLED/SS
D1/TX
D0/RX
RESET
D2/SDA
D3/SCL
D4*
D5*
D6*
D7
IO8
IO9*
IO10*
IO11*
IO12*
SCK
MISO
A5
A4
A3
A2
A1
A0
AREF
IO13*
C5
1u
C6
100n
C7
1u
UCAP
AVCC
D2
CD1206-S01575
R1
10k
S1
TS06-667-30-BK-100-G-SMT-TR
NOT USED
RN1C
22R
RN1D
22R
U1
ATMEGA32U4-XUMU
VCC1
GND3
RESET
XTAL2
XTAL1
AVCC1
AVCC
AREF
VCC
GND
GND1
GND2
UCAP
UVCC
D-
D+
UGND
VBUS
PAD
(PCINT7/OC0A/OC1C/#RTS)PB7
(PCINT6/OC1B/OC4B/ADC13)PB6
(PCINT5/OC1A/#OC4B/ADC12)PB5
(ADC11/PCINT4)PB4
(PDO/MISO/PCINT3)PB3
(PDI/MOSI/PCINT2)PB2
(SCLK/PCINT1)PB1
(SS/PCINT0)PB0
(ICP3/CLKO/OC4A)PC7
(OC3A/#OC4A)PC6
(INT6/AIN0)PE6
(#HWB)PE2
(T0/OC4D/ADC10)PD7
(T1/#OC4D/ADC9)PD6
(XCK1/#CTS)PD5
(ICP1/ADC8)PD4
(TXD1/INT3)PD3
(RXD1/AIN1/INT2)PD2
(SDA/INT1)PD1
(OC0B/SCL/INT0)PD0
(ADC7/TDI)PF7
(ADC6/TDO)PF6
(ADC5/TMS)PF5
(ADC4/TCK)PF4
(ADC1)PF1
(ADC0)PF0
RXLED/SS
IO13*
TXLED
HWB
R7
1k
R8
1k
R6
1k
R5
1k
R4
10k
D1 YELLOW
D3 GREEN
D4 YELLOW
D5 BLUE
FB2
MH2029-300Y
Y3
C13
22p
C12
22p
F1
MF-MSMF050-2
C14
22u
USB
J3
USB_C_Receptacle_USB2.0_16P
VBUS
CC1
CC2
D-
D+
SBU1
SBU2
GND
SHIELD
RV1
RV2
RN1B
RN1A
TP1
TP2
R3
5.1k
R10
5.1k
ICSP
J4
M20-9980345
MISO
SCK
RESET
MOSI
Carlos Sabogal
Sheet: /
File: Arduino Micro.kicad_sch
Title: Arduino Micro
Size: A4
Date: 2024-05-24
Rev: 1
KiCad E.D.A. 8.0.2
Id: 1/1