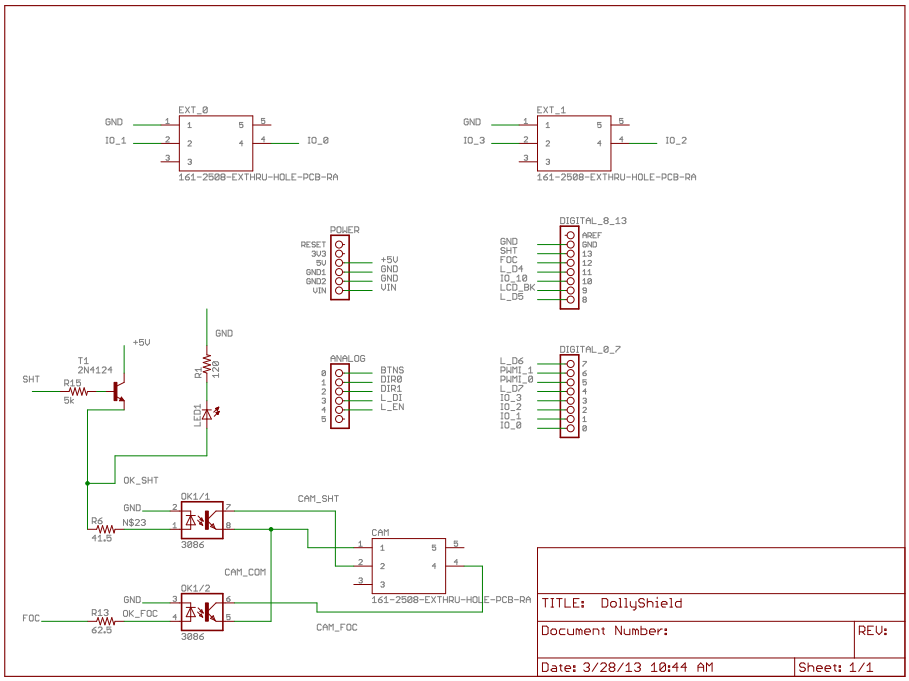
EXT_0
GND
IO_1
IO_0
161-2508-EXTHRU-HOLE-PCB-RA
EXT_1
GND
IO_3
IO_2
161-2508-EXTHRU-HOLE-PCB-RA
POWER
RESET
3V3
5V
GND1
GND2
VIN
+5V
GND
GND
VIN
DIGITAL_8_13
GND
SHT
FOC
L_D4
IO_10
LCD_BK
L_D5
AREF
GND
13
12
11
10
9
8
ANALOG
BTNS
DIR0
DIR1
L_DI
L_EN
DIGITAL_0_7
L_D6
PWM1_1
PWM1_0
L_D7
IO_3
IO_2
IO_1
IO_0
T1
2N4124
SHT
R15
5k
+5V
GND
R1
120
LED1
OK_SHT
OK1/1
GND
N$23
R6
41.5
3086
CAM_SHT
CAM
161-2508-EXTHRU-HOLE-PCB-RA
CAM_COM
OK1/2
GND
OK_FOC
FOC
R13
62.5
3086
CAM_FOC
TITLE: DollyShield
Document Number:
REV:
Date: 3/28/13 10:44 AM
Sheet: 1/1

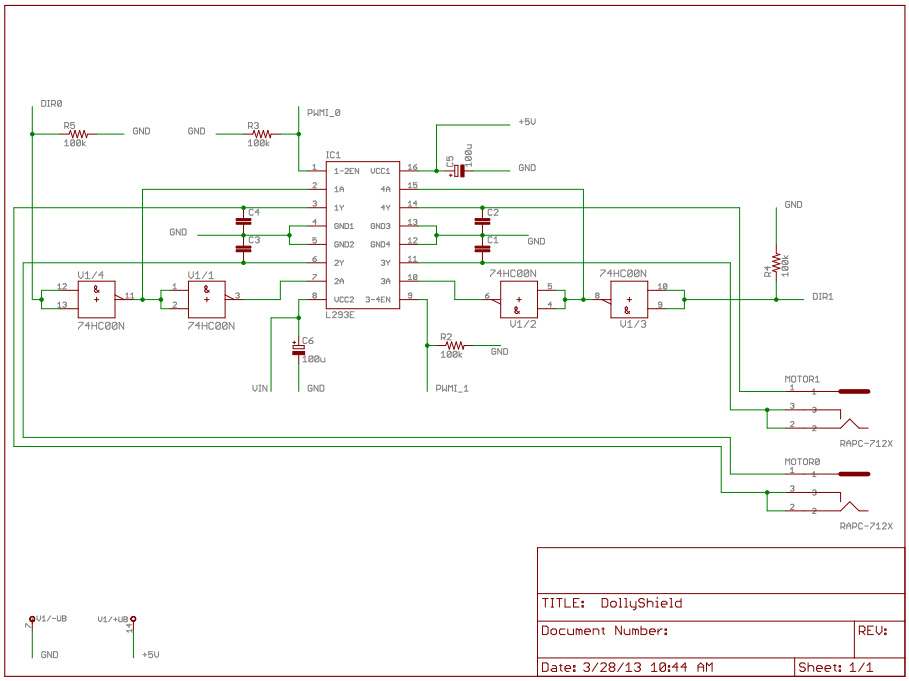
DIR0
R5
100k
GND
GND
R3
100k
PWM1_0
+5V
C5
100u
GND
IC1
1-2EN
VCC1
1A
4A
1Y
4Y
GND1
GND3
GND2
GND4
2Y
3Y
2A
3A
VCC2
3-4EN
L293E
C4
C3
GND
C2
C1
GND
GND
R4
100k
DIR1
V1/4
74HC00N
V1/1
74HC00N
74HC00N
V1/2
74HC00N
V1/3
C6
100u
VIN
GND
R2
100k
GND
PWM1_1
MOTOR1
RAPC-712X
MOTOR0
RAPC-712X
V1/-UB
GND
V1/+UB
+5V
TITLE: DollyShield
Document Number:
REV:
Date: 3/28/13 10:44 AM
Sheet: 1/1

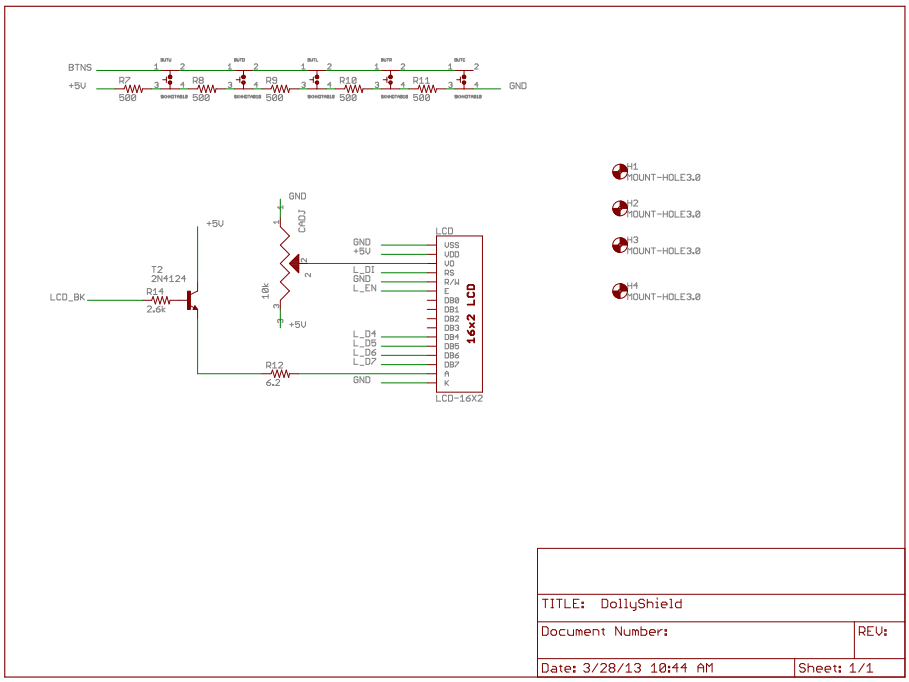
BTNS
+5V
R7
500
R8
500
R9
500
R10
500
R11
500
GND
GND
CADJ
+5V
T2
2N4124
LCD_BK
R14
2.6k
10k
+5V
R12
6.2
GND
LCD
VSS
VDD
VO
RS
R/W
E
DB0
DB1
DB2
DB3
DB4
DB5
DB6
DB7
A
K
16x2 LCD
LCD-16X2
GND
+5V
L_DI
GND
L_EN
L_D4
L_D5
L_D6
L_D7
H1
MOUNT-HOLE3.0
H2
MOUNT-HOLE3.0
H3
MOUNT-HOLE3.0
H4
MOUNT-HOLE3.0
TITLE: DollyShield
Document Number:
REV:
Date: 3/28/13 10:44 AM
Sheet: 1/1