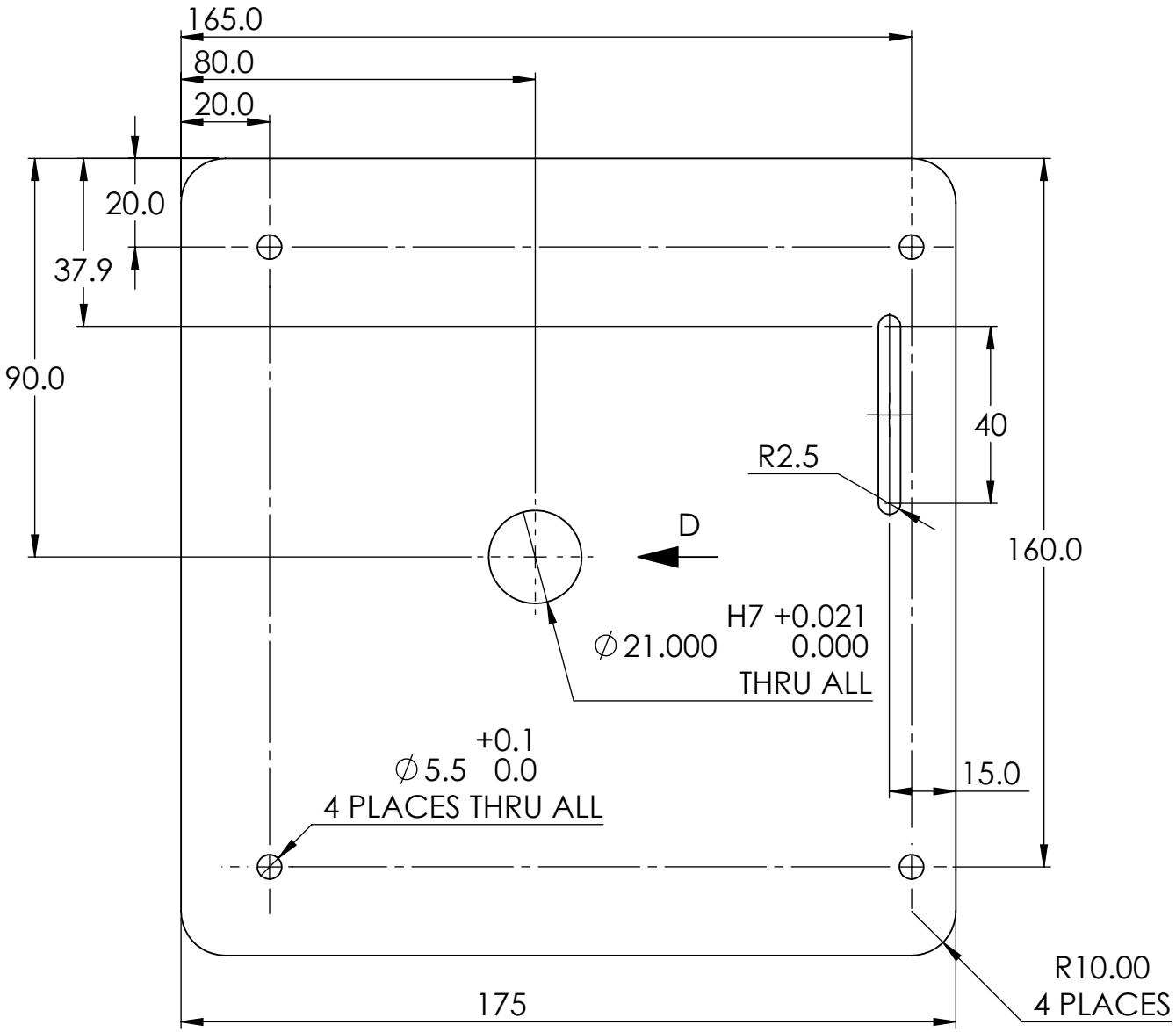

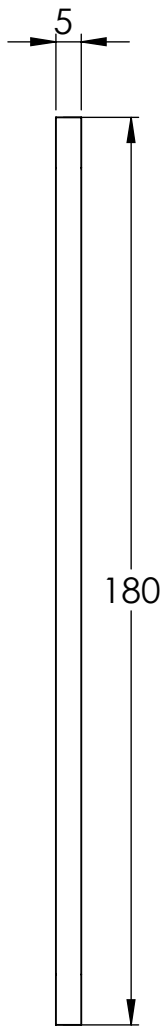

VIEW D
SCALE 2 : 3

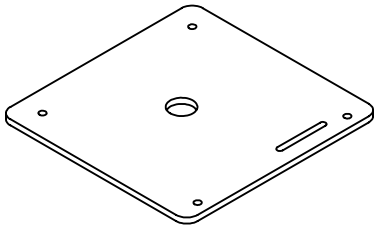

ISOMETRIC VIEW
SCALE 1:5

PLATE OUTLINE TO BE LASER CUT
ALL FILLET RADII 10MM

TOLERANCES		THIRD ANGLE PROJECTION
X = ± 0.5 X.X = ± 0.1 X.XX = ± 0.02	ANGULAR ±1° SURFACE FINISH MACHINED FACES Ra 6.3	

	NAME	DATE
DRAWN	J.TAN	13/02/2020
CHECKED	H.SIDDIQUEY	14/02/2020
APPROVED	S.LIM	16/02/2020

MATERIAL:
ALUMINIIUM 5251H22

ALL DIMENSIONS ARE IN MILLIMETRES

DO NOT SCALE DRAWING

A4 | SCALE 2:3

TITLE:
INTERMEDIATE PLATFORM

DWG No.
IP001

Imperial College London
Department of Mechanical Engineering

SHEET 1 OF 1 | REVISION 12

SOLIDWORKS Educational Product. For Instructional Use Only.