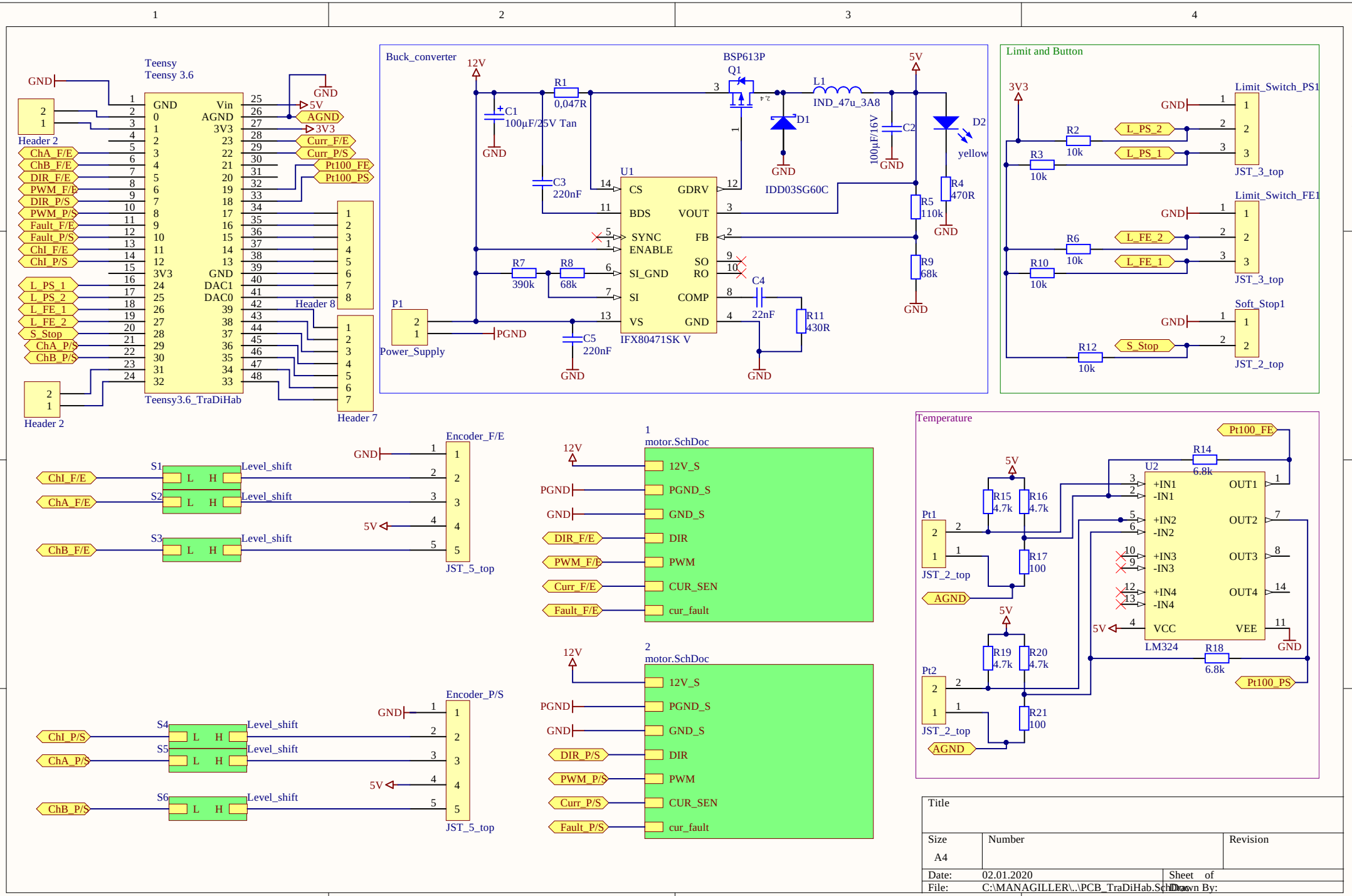
Teensy
Teensy 3.6
Teensy3.6_TraDiHab
Header 2
Header 7
Header 8
Buck_converter
BSP613P
IDD03SG60C
IFX80471SK V
Power_Supply
Limit and Button
Limit_Switch_PS1
Limit_Switch_FE1
Soft_Stop1
JST_3_top
JST_2_top
Encoder_F/E
Encoder_P/S
JST_5_top
Level_shift
motor.SchDoc
Temperature
LM324
Title
Size
A4
Number
Revision
Date: 02.01.2020
Sheet of
File: C:\MANAGILLER\..\PCB_TraDiHab.SchDoc
Drawn By: