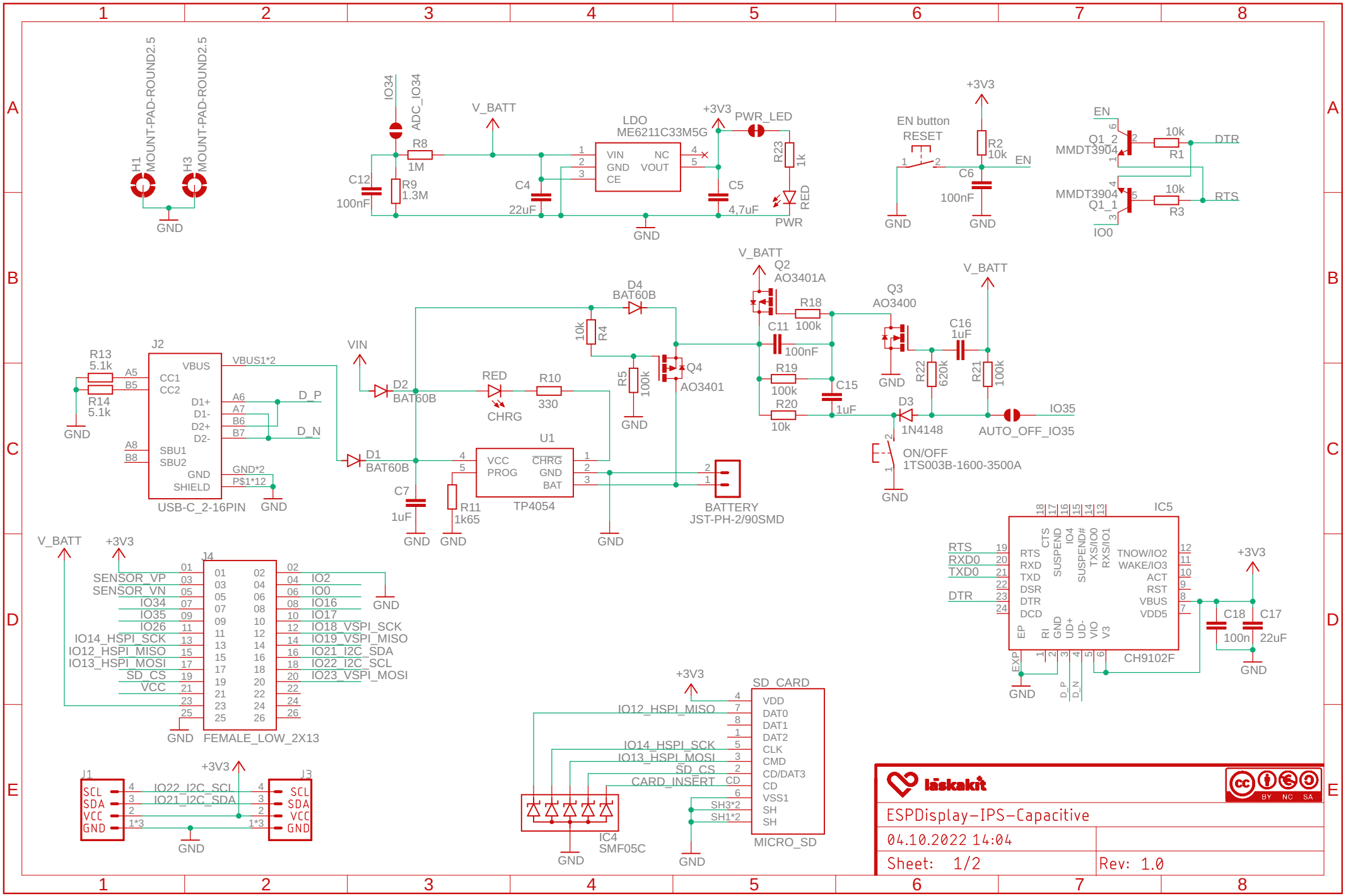
H1 MOUNT-PAD-ROUND2.5
H3 MOUNT-PAD-ROUND2.5
GND
IO34
ADC_IO34
R8 1M
R9 1.3M
C12 100nF
V_BATT
C4 22uF
LDO ME6211C33M5G
VIN GND CE NC VOUT
+3V3
PWR_LED
R23 1k
RED
PWR
C5 4,7uF
EN button RESET
R2 10k
C6 100nF
EN
Q1_2 MMDT3904
Q1_1 MMDT3904
10k R1
10k R3
DTR
RTS
IO0
Q2 AO3401A
R18 100k
C11 100nF
R19 100k
R20 10k
C15 1uF
Q3 AO3400
C16 1uF
R22 620k
R21 100k
D3 1N4148
IO35
AUTO_OFF_IO35
ON/OFF 1TS003B-1600-3500A
D4 BAT60B
R4 10k
R5 100k
Q4 AO3401
J2
R13 5.1k
R14 5.1k
VBUS
CC1
CC2
D1+
D1-
D2+
D2-
SBU1
SBU2
GND
SHIELD
VBUS1*2
D_P
D_N
GND*2
P$1*12
USB-C_2-16PIN
VIN
D2 BAT60B
D1 BAT60B
RED
CHRG
R10 330
U1
VCC PROG CHRG GND BAT
TP4054
C7 1uF
R11 1k65
BATTERY JST-PH-2/90SMD
IC5
RTS RXD0 TXD DTR
RTS RXD TXD DSR DTR DCD
CTS SUSPEND IO4 SUSPEND# TXS/IO0 RXS/IO1
TNOW/IO2 WAKE/IO3 ACT RST VBUS VDD5
EP RI GND UD+ UD- VIO V3
CH9102F
C18 100n
C17 22uF
J4
SENSOR_VP
SENSOR_VN
IO34
IO35
IO26
IO14_HSPI_SCK
IO12_HSPI_MISO
IO13_HSPI_MOSI
SD_CS
VCC
IO2
IO0
IO16
IO17
IO18_VSPI_SCK
IO19_VSPI_MISO
IO21_I2C_SDA
IO22_I2C_SCL
IO23_VSPI_MOSI
FEMALE_LOW_2X13
J1
SCL SDA VCC GND
IO22_I2C_SCL
IO21_I2C_SDA
J3
SCL SDA VCC GND
SD_CARD
VDD DAT0 DAT1 DAT2 CLK CMD CD/DAT3 CD VSS1 SH SH
IO12_HSPI_MISO
IO14_HSPI_SCK
IO13_HSPI_MOSI
SD_CS
CARD_INSERT
SH3*2
SH1*2
IC4 SMF05C
MICRO_SD
laskakit
ESPDisplay-IPS-Capacitive
04.10.2022 14:04
Sheet: 1/2
Rev: 1.0

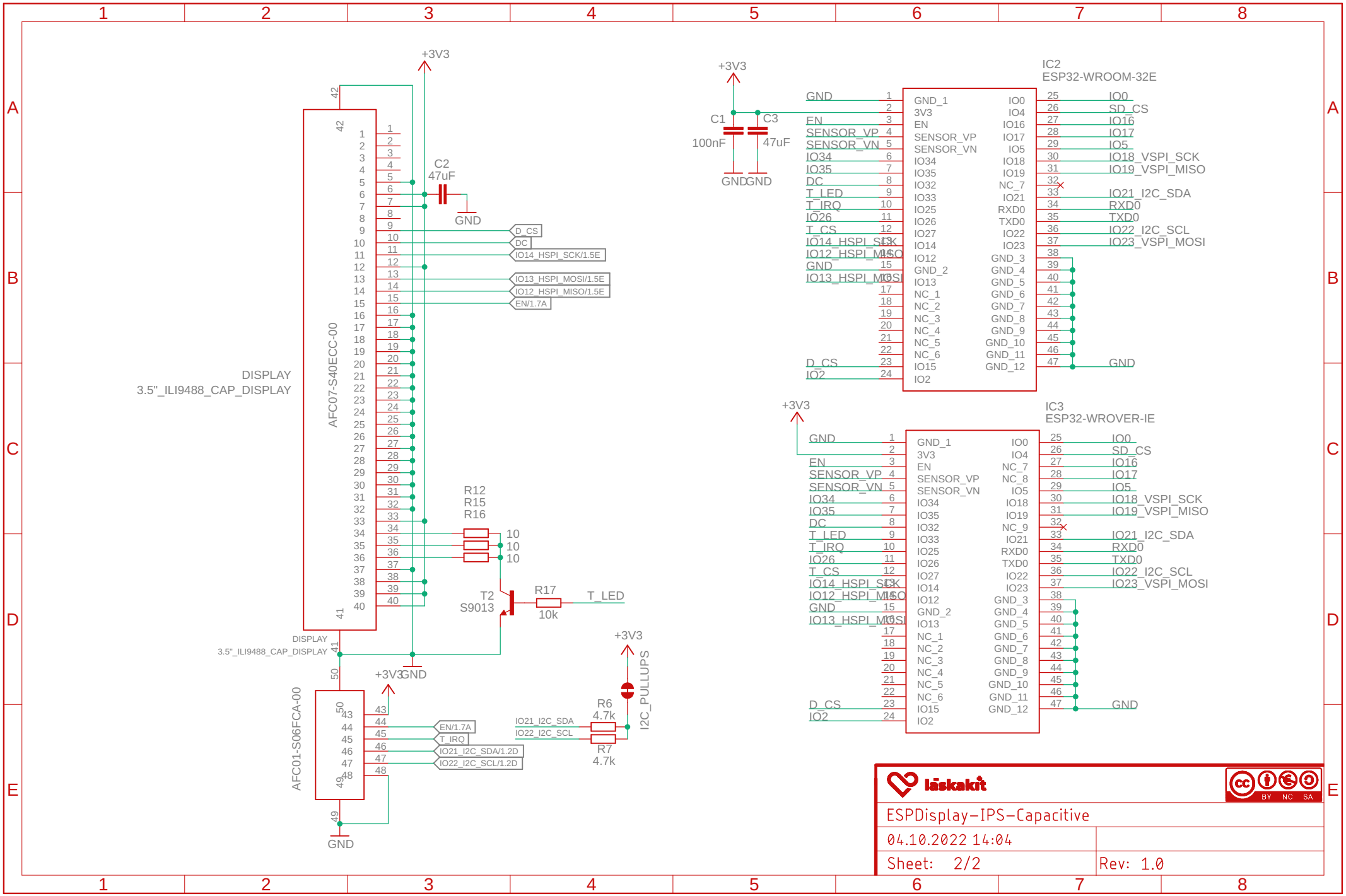
DISPLAY
3.5"_ILI9488_CAP_DISPLAY
AFC07-S40ECC-00
+3V3
C2
47uF
GND
D_CS
DC
IO14_HSPI_SCK/1.5E
IO13_HSPI_MOSI/1.5E
IO12_HSPI_MISO/1.5E
EN/1.7A
R12
R15
R16
10
10
10
T2
S9013
R17
10k
T_LED
DISPLAY
3.5"_ILI9488_CAP_DISPLAY
AFC01-S06FCA-00
EN/1.7A
T_IRQ
IO21_I2C_SDA/1.2D
IO22_I2C_SCL/1.2D
IO21_I2C_SDA
IO22_I2C_SCL
R6
4.7k
R7
4.7k
I2C_PULLUPS
C1
100nF
C3
47uF
IC2
ESP32-WROOM-32E
IC3
ESP32-WROVER-IE
GND_1
3V3
EN
SENSOR_VP
SENSOR_VN
IO34
IO35
IO32
IO33
IO25
IO26
IO27
IO14
IO12
GND_2
IO13
NC_1
NC_2
NC_3
NC_4
NC_5
NC_6
IO15
IO2
IO0
IO4
IO16
IO17
IO5
IO18
IO19
NC_7
NC_8
NC_9
IO21
RXD0
TXD0
IO22
IO23
GND_3
GND_4
GND_5
GND_6
GND_7
GND_8
GND_9
GND_10
GND_11
GND_12
SD_CS
IO18_VSPI_SCK
IO19_VSPI_MISO
IO21_I2C_SDA
RXD0
TXD0
IO22_I2C_SCL
IO23_VSPI_MOSI
IO14_HSPI_SCK
IO12_HSPI_MISO
IO13_HSPI_MOSI
D_CS
IO2
läskakit
ESPDisplay-IPS-Capacitive
04.10.2022 14:04
Sheet: 2/2
Rev: 1.0