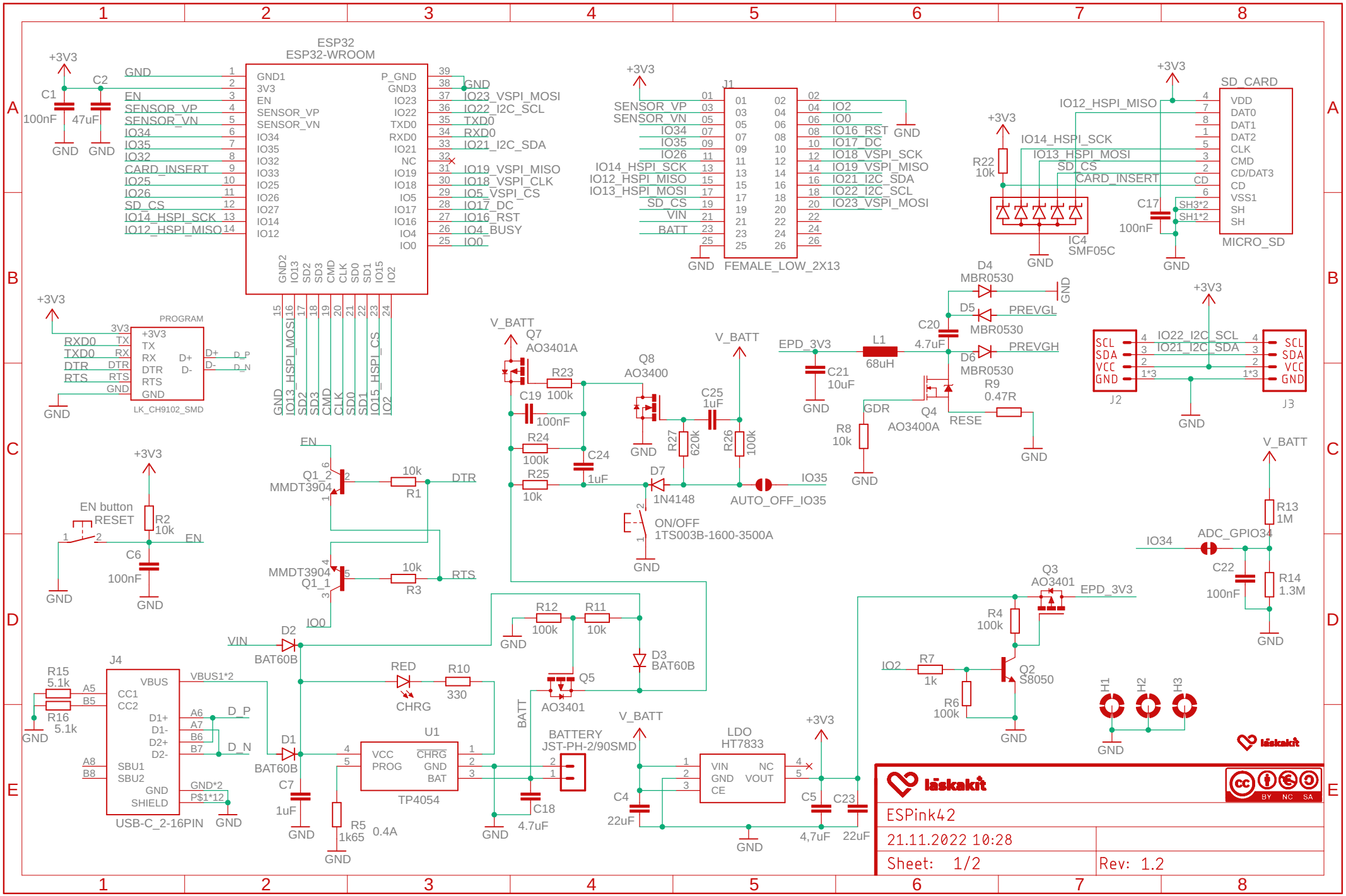
ESP32
ESP32-WROOM
GND1
3V3
EN
SENSOR_VP
SENSOR_VN
IO34
IO35
IO32
IO33
IO25
IO26
IO27
IO14
IO12
GND2
IO13
SD2
SD3
CMD
CLK
SD0
SD1
IO15
IO2
P_GND
GND3
IO23
IO22
TXD0
RXD0
IO21
NC
IO19
IO18
IO5
IO17
IO16
IO4
IO0
CARD_INSERT
SD_CS
IO14_HSPI_SCK
IO12_HSPI_MISO
IO13_HSPI_MOSI
IO23_VSPI_MOSI
IO22_I2C_SCL
IO21_I2C_SDA
IO19_VSPI_MISO
IO18_VSPI_CLK
IO5_VSPI_CS
IO17_DC
IO16_RST
IO4_BUSY
J1
FEMALE_LOW_2X13
IO2
IO0
IO18_VSPI_SCK
IO19_VSPI_MISO
IO22_I2C_SCL
IO23_VSPI_MOSI
VIN
BATT
SD_CARD
MICRO_SD
VDD
DAT0
DAT1
DAT2
CLK
CMD
CD/DAT3
CD
VSS1
SH
IC4
SMF05C
PROGRAM
LK_CH9102_SMD
RXD0
TXD0
DTR
RTS
D+
D-
D_P
D_N
V_BATT
Q7
AO3401A
Q8
AO3400
R23
100k
C19
100nF
R24
100k
R25
10k
C24
1uF
R27
620k
R26
100k
C25
1uF
D7
1N4148
AUTO_OFF_IO35
ON/OFF
1TS003B-1600-3500A
EPD_3V3
L1
68uH
C21
10uF
C20
4.7uF
D4
MBR0530
D5
MBR0530
D6
MBR0530
PREVGL
PREVGH
R9
0.47R
Q4
AO3400A
GDR
RESE
R8
10k
J2
J3
SCL
SDA
VCC
GND
IO22_I2C_SCL
IO21_I2C_SDA
EN button
RESET
R2
10k
C6
100nF
Q1_2
MMDT3904
Q1_1
R1
R3
DTR
RTS
IO0
R12
100k
R11
10k
D3
BAT60B
Q5
AO3401
D2
BAT60B
D1
BAT60B
RED
CHRG
R10
330
U1
TP4054
VCC
PROG
CHRG
GND
BAT
C7
1uF
R5
1k65
0.4A
C18
4.7uF
BATTERY
JST-PH-2/90SMD
J4
USB-C_2-16PIN
VBUS
CC1
CC2
D1+
D1-
D2+
D2-
SBU1
SBU2
SHIELD
VBUS1*2
GND*2
P$1*12
R15
5.1k
R16
5.1k
LDO
HT7833
VIN
GND
CE
NC
VOUT
C4
22uF
C5
4,7uF
C23
22uF
Q3
AO3401
R4
100k
R7
1k
R6
100k
Q2
S8050
IO2
IO34
ADC_GPIO34
R13
1M
R14
1.3M
C22
100nF
H1
H2
H3
läskakit
ESPink42
21.11.2022 10:28
Sheet: 1/2
Rev: 1.2