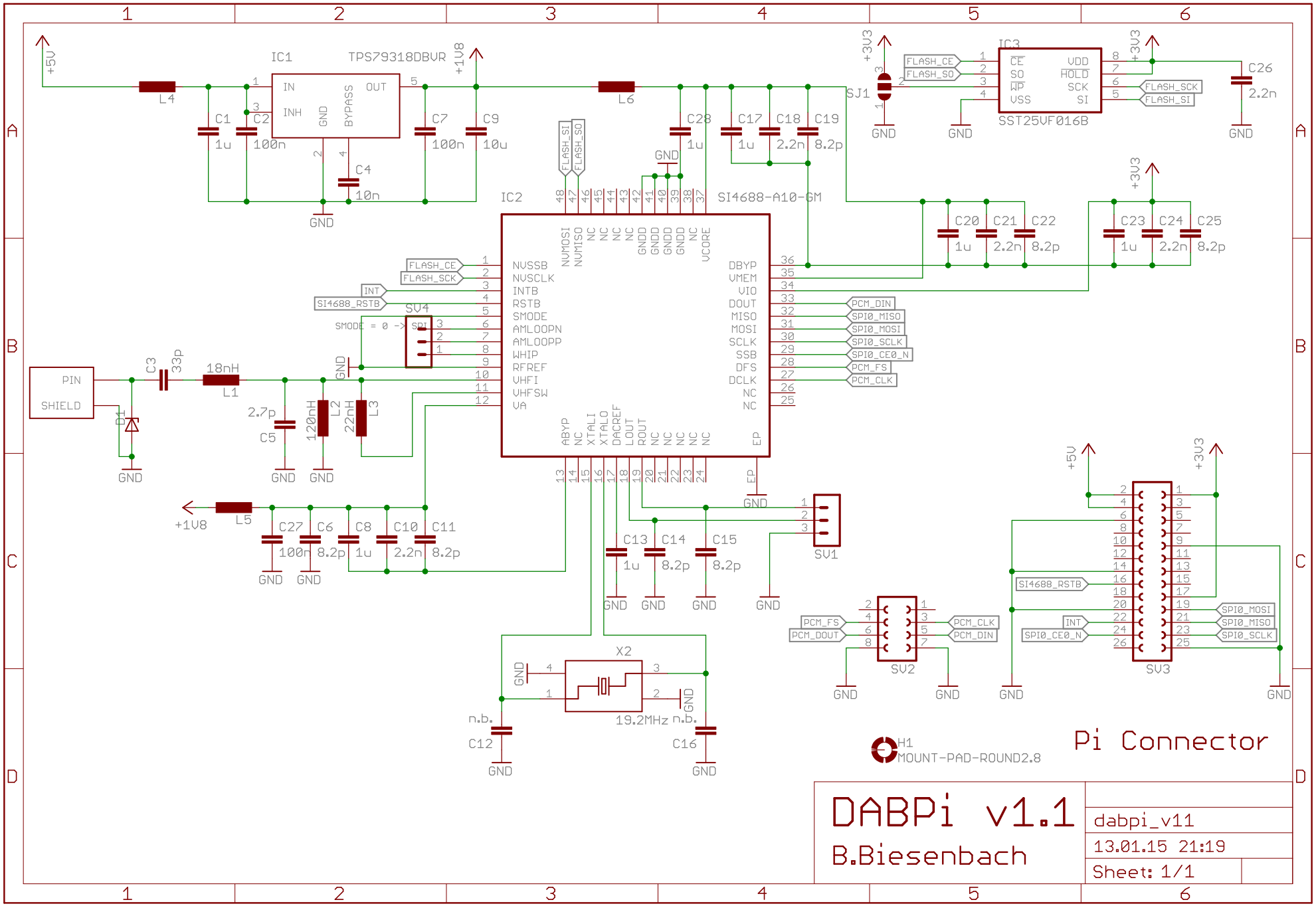
IC1
TPS79318DBVR
IN
INH
GND
BYPASS
OUT
+5V
+1V8
L4
L5
L6
C1 1u
C2 100n
C4 10n
C7 100n
C9 10u
IC2
SI4688-A10-GM
NVSSB
NVSCLK
INTB
RSTB
SMODE
AMLOOPN
AMLOOPP
WHIP
RFREF
VHFI
VHFSW
VA
DBYP
VMEM
VIO
DOUT
MISO
MOSI
SCLK
SSB
DFS
DCLK
NC
ABYP
XTALI
XTALO
DACREF
LOUT
ROUT
EP
NVMOSI
NVMISO
VCORE
GNDD
FLASH_CE
FLASH_SCK
FLASH_SI
FLASH_SO
INT
SI4688_RSTB
SMODE = 0 -> SPI
SV4
PCM_DIN
SPI0_MISO
SPI0_MOSI
SPI0_SCLK
SPI0_CE0_N
PCM_FS
PCM_CLK
PIN
SHIELD
D1
C3 33p
18nH L1
2.7p C5
120nH L2
22nH L3
C27 100n
C6 8.2p
C8 1u
C10 2.2n
C11 8.2p
C13 1u
C14 8.2p
C15 8.2p
SV1
X2
19.2MHz
n.b.
C12
C16
PCM_DOUT
SV2
SV3
H1
MOUNT-PAD-ROUND2.8
Pi Connector
IC3
SST25VF016B
CE
SO
WP
VSS
VDD
HOLD
SCK
SI
SJ1
+3V3
C26 2.2n
C17 1u
C18 2.2n
C19 8.2p
C20 1u
C21 2.2n
C22 8.2p
C23 1u
C24 2.2n
C25 8.2p
GND
DABPi v1.1
B.Biesenbach
dabpi_v11
13.01.15 21:19
Sheet: 1/1