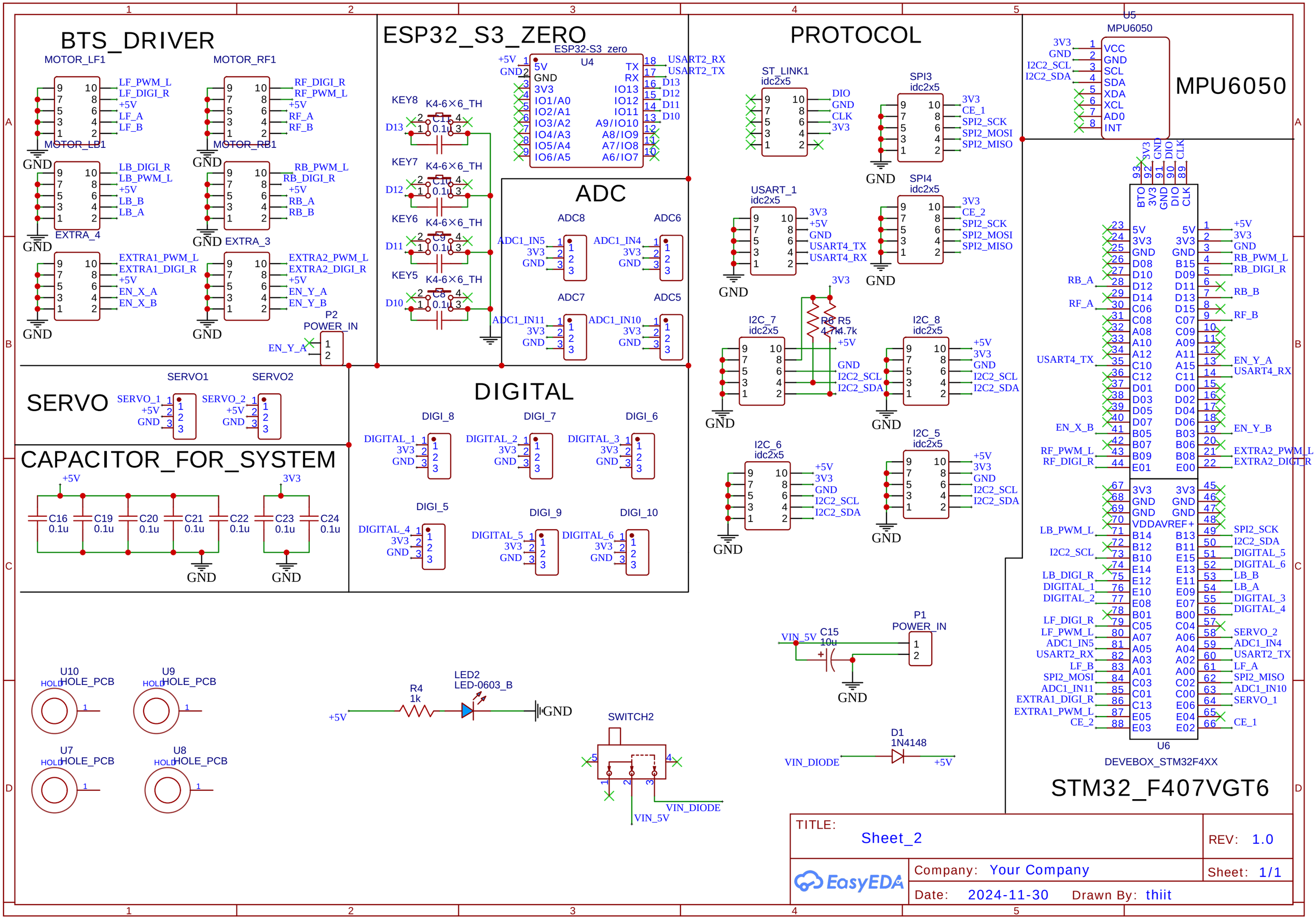
BTS_DRIVER
MOTOR_LF1
MOTOR_RF1
MOTOR_LB1
MOTOR_RB1
EXTRA_4
EXTRA_3
LF_PWM_L
LF_DIGI_R
+5V
LF_A
LF_B
RF_DIGI_R
RF_PWM_L
RF_A
RF_B
LB_DIGI_R
LB_PWM_L
LB_B
LB_A
RB_PWM_L
RB_DIGI_R
RB_A
RB_B
EXTRA1_PWM_L
EXTRA1_DIGI_R
EN_X_A
EN_X_B
EXTRA2_PWM_L
EXTRA2_DIGI_R
EN_Y_A
EN_Y_B
GND
P2
POWER_IN
ESP32_S3_ZERO
ESP32-S3_zero
U4
5V
GND
3V3
IO1/A0
IO2/A1
IO3/A2
IO4/A3
IO5/A4
IO6/A5
TX
RX
IO13
IO12
IO11
A9/IO10
A8/IO9
A7/IO8
A6/IO7
USART2_RX
USART2_TX
D13
D12
D11
D10
KEY8
KEY7
KEY6
KEY5
K4-6×6_TH
C11
C10
C9
C8
0.1u
ADC
ADC8
ADC6
ADC7
ADC5
ADC1_IN5
ADC1_IN4
ADC1_IN11
ADC1_IN10
PROTOCOL
ST_LINK1
idc2x5
DIO
CLK
SPI3
CE_1
SPI2_SCK
SPI2_MOSI
SPI2_MISO
SPI4
CE_2
USART_1
USART4_TX
USART4_RX
I2C_7
I2C_8
I2C_6
I2C_5
I2C2_SCL
I2C2_SDA
R6 R5
4.7k
U5
MPU6050
VCC
SCL
SDA
XDA
XCL
AD0
INT
I2C2_SCL
I2C2_SDA
SERVO
SERVO1
SERVO2
SERVO_1
SERVO_2
CAPACITOR_FOR_SYSTEM
C16
C19
C20
C21
C22
C23
C24
DIGITAL
DIGI_8
DIGI_7
DIGI_6
DIGI_5
DIGI_9
DIGI_10
DIGITAL_1
DIGITAL_2
DIGITAL_3
DIGITAL_4
DIGITAL_5
DIGITAL_6
U6
DEVEBOX_STM32F4XX
STM32_F407VGT6
P1
POWER_IN
VIN_5V
C15
10u
D1
1N4148
VIN_DIODE
U10
U9
U7
U8
HOLE_PCB
R4
1k
LED2
LED-0603_B
SWITCH2
TITLE:
Sheet_2
REV: 1.0
Company: Your Company
Sheet: 1/1
Date: 2024-11-30
Drawn By: thiit
EasyEDA