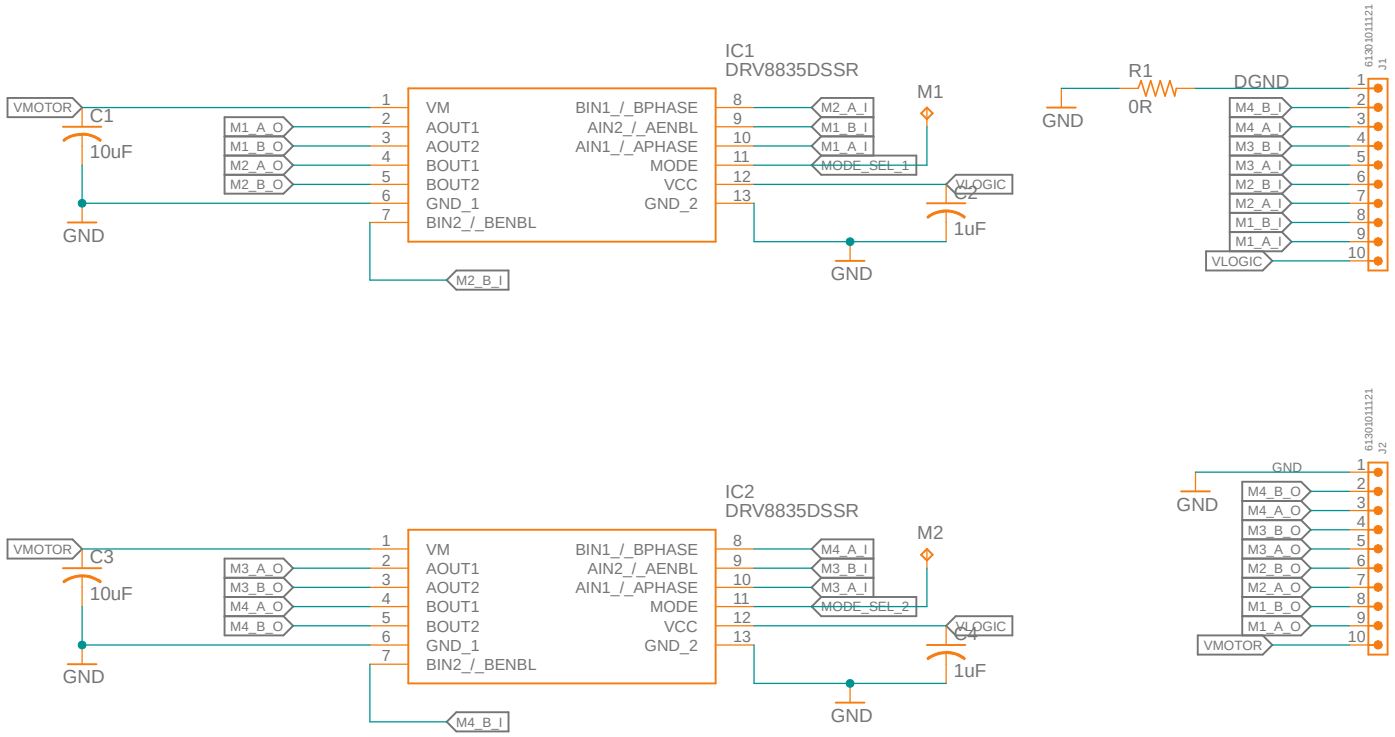

DRV8835 Mini drive
with up to 8 individual half-bridges

Design in Thailand
By Tinlethax RB26

Robot Club Engineering KMITL

DRV8835_mini_drive v6

7/26/2024 7:44 AM

Sheet: 1/1