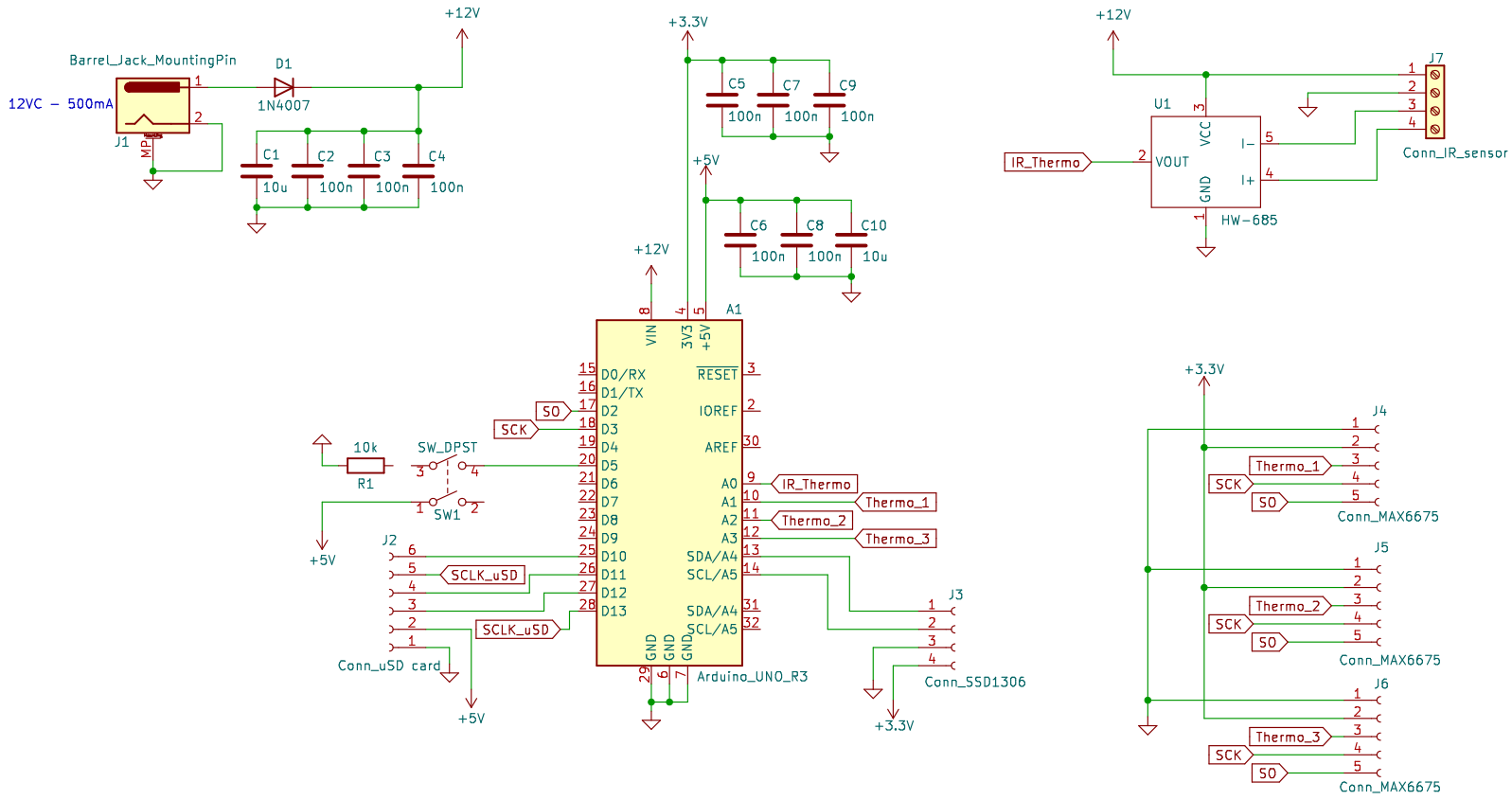

Author: Esteban Andrés Rodríguez Meléndez
License: GPL-3.0
GNU General Public License v3.0
UNAL

Sheet: /
File: thermo-register.kicad_sch

Title: Thermo register

Size: A4	Date: 2023-01-20	**Rev: 0.3**
KiCad E.D.A. kicad (6.0.10)		Id: 1/1