0	1	2	3	4	5	6	7	8	9

CABLE TYPE: [(2x0,5mm²)+S+(2x2x0,34mm²)+S]+S

CABLE LENGTH: 7.3 m **TOLERANCE:**

LEVEL	ARTICLE	QTY.
0	CABLE WS309A G114 STD	1
╚═ 1	GP140055 / CONTROL CABLE [(2x0,5mm²)+S+(2x2x0,34mm²)+S]+S	7.3 m
╚═ 1	GP399992 / CONNECTOR 7PIN M16 FEMALE CAB. OUT 6-8mm	1
╚═ 1	GP107619 / TAG ASSEMBLY WS309A	2

LAYOUT INTERPRETATION

GD196411

	Height (m)	Section
TOWER		
	RD	**Type**
CABLE	GD076656 GD078271	1
	RD	**LENGTH/COLOUR**
HEAT SHRINKABLE		
	RD	
TERMINALS	EM392008	
TAG	EM392008	
ADHESIVE TAPE	EM392008	

REMARKS

BOX SIDE
(*)Connect all shields with DIN 46237/A Ø5
CONECTOR SIDE
Connect general shield to the connector according connector detail.

COMENTARIOS

LADO CAJA
(*) Unir todas las pantallas en una única con terminal DIN 46237/A Ø5
LADO CONECTOR
Conectar pantalla general según detalle conector.

ADDITIONAL INFORMATION CODES

[016.001]

Vane

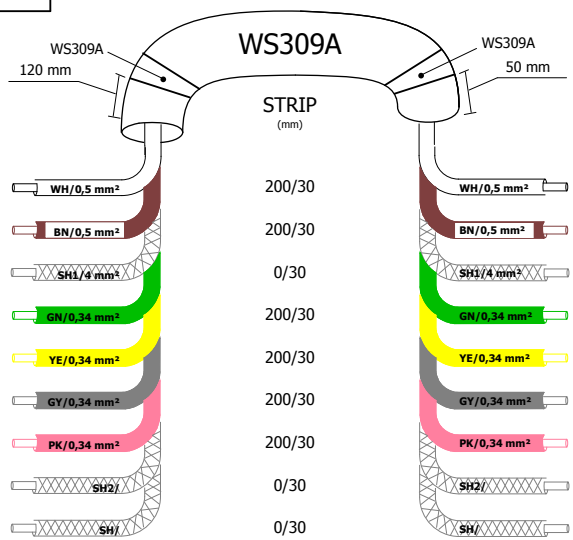

TARGET	TERMINAL	STRIP (mm)	TERMINAL	TARGET
A6 :5	DIN 46228/4	200/30	GP399992	VAN :5
A6 :6	DIN 46228/4	200/30	=	VAN :6
A6 :PE	DIN 46237/A Ø5	0/30		
A6 :2	DIN 46228/4	200/30	=	VAN :2
A6 :1	DIN 46228/4	200/30	=	VAN :1
A6 :3	DIN 46228/4	200/30	=	VAN :3
A6 :4	DIN 46228/4	200/30	=	VAN :4
A6 :PE	DIN 46237/A Ø5	0/30		
A6 :PE	DIN 46237/A Ø5	0/30	=	VAN :PE

Author:	HBABIER	This drawing cannot be used, nor communicated to third parties or reproduced without written permission of SIEMENS GAMESA	SIEMENS Gamesa RENEWABLE ENERGY	PROJECT TITLE:	CABLE: GP354179	Rev: 0	Date: 26.Jun.2017	Description: INITIAL VERSION
Reviewed:	PSPINA				CABLE WS309A G114 STD	Rev:	Date:	Description:
Approved:	GPI					Rev:	Date:	Description:

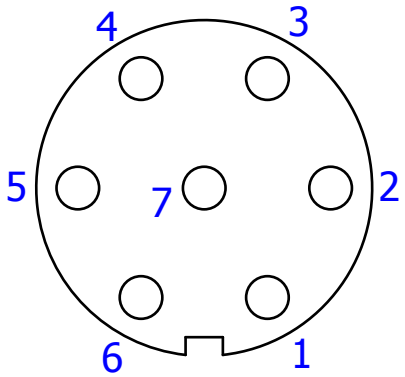

CONNECTOR DETAIL

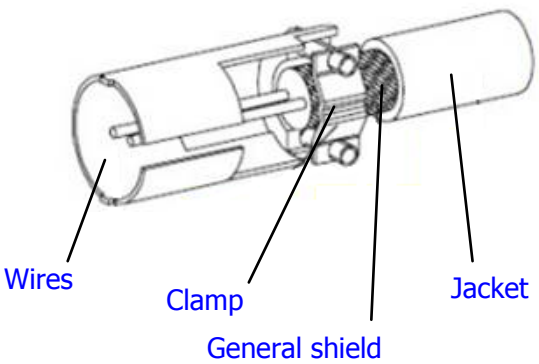

016.001

Author:	HBABIER	This drawing cannot be used, nor communicated to third parties or reproduced without written permission of GAMESA I&T.	Gamesa	PAGE TYPE:	DESCRIPTION: -016- 7PIN M16 FEMALE	Rev:	Date:	Description:
Reviewed:	PSPINA					Rev:	Date:	Description:
Approved:	GPI					Rev: GRAPHIC CODES	Date:	Description: AMURALI