CABLES AND BOXES ACCESORIES GAMESA 2.0-2.1MW

Document ID and revision	Status	Status date (yyyy-mm-dd)	Language
EM392008 R36	Released	2023-09-12	en-US

Original or translation of	RDS-PP®
Original	

File name
EM392008 R36.docx

Updates made since the previous revision
Format of the document is changed. Point 7.39: Included the auxiliary box A12.

Confidentiality:	Deliverable Type	Doc Classification:
2 / SUPPLIER INFORMATION	D02 - Requirements Document	STD - Support

Siemens Gamesa Renewable Energy S.A. Parque Tecnológico de Bizkaia, Edificio 222, 48170, Zamudio, Vizcaya, Spain
+34 944 03 73 52 – info@siemensgamesa.com – www.siemensgamesa.com

Table of contents

1. Purpose 9
2. Scope 9
3. Labels 9
3.1. Use 9
3.2. Description 9
3.3. General technical requirements 9
3.4. References 9
4. Cable terminals 9
4.1. Use 10
4.2. Terminals for copper cables 10
4.2.1. Types of terminals 10
4.2.2. General technical requirements 10
4.2.3. Supply of terminals already connected 10
4.2.4. Wide palm for power copper terminal 11
4.3. Aluminium terminal lugs and bimetallic connectors for aluminium cables 11
4.3.1. Types of terminals 11
4.3.2. General technical requirements 11

© Siemens Gamesa Renewable Energy S.A., 2023. All rights reserved.

5. Heat shrinkable tubes 12
5.1. Use 12
5.2. General technical requirements 12
5.3. Heat shrinkable in power cables 12
5.4. Heat shrinkable in control cables 13
5.5. Adhesive conductive copper tape 13
6. Cable glands and nuts 13
6.1. Plastic cable gland and nut 13
6.2. Metallic cable gland and nut 14
6.3. General technical requirements 15
6.4. Technical documentation 15
6.5. Marking 15
7. Boxes 15
7.1. Use 16
7.2. General requirements 16
7.3. A6 box 17
7.3.1. Use 17
7.3.2. Type 17
7.3.3. Cable entrances 18
7.3.4. Connection terminal blocks 18
7.3.5. Fastening of the box 18
7.3.6. Other components 18
7.4. A6 box without card 19
7.4.1. Use 19
7.4.2. Type 19
7.4.3. Cable entrances 19
7.4.4. Connection terminal blocks 19
7.4.5. Fastening of the box 19
7.4.6. Other components 19
7.5. A6 box without card 20
7.5.1. Use 20
7.5.2. Type 20
7.5.3. Cable entrances 20
7.5.4. Connection terminal blocks 20
7.5.5. Fastening of the box 20
7.5.6. Other components 20
7.6. A6 box without card 20
7.6.1. Use 20
7.6.2. Type 21
7.6.3. Cable entrances 21
7.6.4. Connection terminal blocks 21

© Siemens Gamesa Renewable Energy S.A., 2023. All rights reserved.

7.6.5. Fastening of the box 21
7.6.6. Other components 21
7.7. A6 box without card + rain/precipitation sensor 21
7.7.1. Use 21
7.7.2. Type 21
7.7.3. Cable entrances 21
7.7.4. Connection terminal blocks 22
7.7.5. Fastening of the box 22
7.7.6. Other components 22
7.8. A6 box without card 22
7.8.1. Use 22
7.8.2. Type 22
7.8.3. Cable entrances 22
7.8.4. Connection terminal blocks 22
7.8.5. Fastening of the box 23
7.8.6. Other components 23
7.9. A6A box 23
7.9.1. Use 23
7.9.2. Type 23
7.9.3. Cable entrances 23
7.9.4. Connection terminal blocks 23
7.9.5. Other components 23
7.10. A6A box 24
7.10.1. Use 24
7.10.2. Type 24
7.10.3. Cable entrances 24
7.10.4. Connection terminal blocks 24
7.10.5. Other components 24
7.11. A6C box 24
7.11.1. Use 24
7.11.2. Type 24
7.11.3. Cable entrances 24
7.11.4. Connection terminal blocks 25
7.11.5. Other components 25
7.12. A6C box without card 25
7.12.1. Use 25
7.12.2. Type 25
7.12.3. Cable entrances 25
7.12.4. Connection terminal blocks 25
7.12.5. Other components 25
7.13. A8 box 26

© Siemens Gamesa Renewable Energy S.A., 2023. All rights reserved.

7.13.1. Use 26
7.13.2. Type....26
7.13.3. Cable entrances 26
7.13.4. Connection terminal blocks....26
7.13.5. Fastening of the box 26
7.13.6. Other components....26
7.14. A9 box G8/G9X....26
7.14.1. Use 26
7.14.2. Type....27
7.14.3. Cable entrances 27
7.14.4. Connection terminal blocks....27
7.14.5. Fastening of the box 27
7.14.6. Other components....27
7.15. A9 box G114....27
7.15.1. Use 27
7.15.2. Type....27
7.15.3. Cable entrances 27
7.15.4. Connection terminal blocks....27
7.15.5. Fastening of the box 28
7.15.6. Other components....28
7.16. A9 box G114....28
7.16.1. Use 28
7.16.2. Type....28
7.16.3. Cable entrances 28
7.16.4. Connection terminal blocks....28
7.16.5. Fastening of the box 28
7.16.6. Other components....29
7.17. A9 box G114....29
7.17.1. Use 29
7.17.2. Type....29
7.17.3. Cable entrances 29
7.17.4. Connection terminal blocks....29
7.17.5. Fastening of the box 29
7.17.6. Other components....29
7.18. A14 box 30
7.18.1. Use 30
7.18.2. Type....30
7.18.3. Cable entrances 30
7.18.4. Connection terminal blocks....30
7.18.5. Fastening of the box 30
7.18.6. Other components....30

© Siemens Gamesa Renewable Energy S.A., 2023. All rights reserved.

7.19. A15 box 30
7.19.1. Use 30
7.19.2. Type 30
7.19.3. Cable entrances 30
7.19.4. Connection terminal blocks 31
7.19.5. Other components 31
7.20. A16 box 31
7.20.1. Use 31
7.20.2. Type 31
7.20.3. Cable entrances 31
7.20.4. Connection terminal blocks 31
7.21. A20 box 31
7.21.1. Use 31
7.21.2. Type 31
7.21.3. Cable entrances 31
7.21.4. Connection terminal blocks 32
7.21.5. Other components 32
7.22. A20 box 32
7.22.1. Use 32
7.22.2. Type 32
7.22.3. Cable entrances 32
7.22.4. Connection terminal blocks 32
7.22.5. Other components 32
7.23. A21 box 32
7.23.1. Use 32
7.23.2. Type 32
7.23.3. Cable entrances 33
7.23.4. Other components 33
7.24. A32 box G8X 34
7.24.1. Use 34
7.24.2. Type 34
7.24.3. Cable entrances 34
7.24.4. Connection terminal blocks 34
7.24.5. Fastening of the box 35
7.24.6. Other components 35
7.25. A32 box G9X 35
7.25.1. Use 35
7.25.2. Type 35
7.25.3. Cable entrances 35
7.25.4. Connection terminal blocks 35
7.25.5. Fastening of the box 35

© Siemens Gamesa Renewable Energy S.A., 2023. All rights reserved.

7.25.6. Other components 35
7.26. A32 box G9X 35
7.26.1. Use 36
7.26.2. Type 36
7.26.3. Cable entrances 36
7.26.4. Connection terminal blocks 36
7.26.5. Fastening of the box 36
7.26.6. Other components 36
7.27. A32 box G114 36
7.27.1. Use 36
7.27.2. Type 36
7.27.3. Cable entrances 36
7.27.4. Connection terminal blocks 36
7.27.5. Fastening of the box 37
7.27.6. Other components 37
7.28. A32 box G114 37
7.28.1. Use 37
7.28.2. Type 37
7.28.3. Cable entrances 37
7.28.4. Connection terminal blocks 37
7.28.5. Fastening of the box 37
7.28.6. Other components 37
7.29. A32 box G122 MY19 37
7.29.1. Use 37
7.29.2. Type 38
7.29.3. Cable entrances 38
7.29.4. Connection terminal blocks 38
7.29.5. Fastening of the box 38
7.29.6. Other components 38
7.30. A35 box 38
7.30.1. Use 38
7.30.2. Type 38
7.30.3. Cable entrances 38
7.30.4. Connection terminal blocks 38
7.30.5. Fastening of the box 38
7.30.6. Other components 39
7.31. A38 box 39
7.31.1. Use 39
7.31.2. Type 39
7.31.3. Cable entrances 39
7.31.4. Connection terminal blocks 39

© Siemens Gamesa Renewable Energy S.A., 2023. All rights reserved.

7.31.5. Fastening of the box 39
7.32. A38 box G114 39
7.32.1. Use 39
7.32.2. Type 39
7.32.3. Cable entrances 39
7.32.4. Connection terminal blocks 40
7.32.5. Fastening of the box 40
7.33. A38 box G122 MY19 40
7.33.1. Use 40
7.33.2. Type 40
7.33.3. Cable entrances 40
7.33.4. Connection terminal blocks 40
7.33.5. Fastening of the box 40
7.34. A82 box 40
7.34.1. Use 40
7.34.2. Type 41
7.34.3. Cable entrances 41
7.34.4. Connection terminal blocks 41
7.34.5. Fastening of the box 41
7.34.6. Other components 41
7.35. A101 box 41
7.35.1. Use 41
7.35.2. Type 41
7.35.3. Cable entrances 42
7.35.4. Connection terminal blocks 42
7.36. A102 box 42
7.36.1. Use 42
7.36.2. Type 42
7.36.3. Cable entrances 42
7.36.4. Connection terminal blocks 42
7.37. JB314 box 42
7.37.1. Use 42
7.37.2. Type 42
7.37.3. Cable entrances 42
7.37.4. Connection terminal blocks 42
7.38. JB861 box 43
7.38.1. Use 43
7.38.2. Documentation to be delivered by the supplier 43
7.39. A12 box 43
7.39.1. Use 43
7.39.2. Type 43

© Siemens Gamesa Renewable Energy S.A., 2023. All rights reserved.

7.39.3. Cable entrances 43
7.39.4. Fastening of the box 43
7.39.5. Other components 43
8. Metal tray 44
8.1. Use 44
8.2. Type 44
8.3. Material 44
9. Connectors 44
9.1. DIN 43650 connectors 44
9.1.1. Electrovalve connector 45
9.1.2. Temperature connector 45
9.1.3. PDM description 45
9.2. Data transmission 46
9.2.1. DSUB connector 46
9.2.2. RJ45 connector 47
9.3. Round connector 47
9.3.1. Encoder 47
9.3.2. Proportional valve 48
9.3.3. Inductive and rotor lock sensor 48
9.3.4. Water level sensor 49
9.3.5. Anemometer 50
9.3.6. Vane 50
9.3.7. Ice detector 51
9.3.8. Sonic and blade pitch position sensor 51
9.4. UPS and desktop computers connectors 52
9.4.1. Connector IEC 320 C13/C14 coupler 52
10. Marks and certifications 52
11. Major changes compared to last revision 53

© Siemens Gamesa Renewable Energy S.A., 2023. All rights reserved.

1. Purpose

To define the technical requirements of the auxiliary elements of the power supply and controls system of the WTG.

2. Scope

All Siemens-Gamesa 2.0/2.1MW.

3. Labels

3.1. Use

This specification affects labels used to identify low voltage insulated cables.

They are used to identify both ends of the same cable.

The labels must be designed to withstand the physical environment where they are going to be placed, for the entire life of the machine.

3.2. Description

Each cable is identified through two labels located on the ends, except for those cables that are so short that they can be identified with one label.

The text on the label will consist of upper-case black letters whose height and thickness will match the size of the label.

3.3. General technical requirements

PROPERTY	REQUIREMENT
Color	Yellow
Operating temperature	-40 ºC to 70 ºC
Type of marking	Permanente
Fastening type	Cable tie or laminate adhesive
Mechanical resistance	High resistance to tearing and cuts
Chemical resistance	High resistance to industrial oils, water, and humidity
Dimensions	According to the outer diameter of the cable on which it is going to be installed

3.4. References

References based on the drawings.

4. Cable terminals

© Siemens Gamesa Renewable Energy S.A., 2023. All rights reserved.

4.1. Use

This specification defines the technical and constructive characteristics required for the terminals used on low voltage cables.

4.2. Terminals for copper cables

4.2.1. Types of terminals

This specification affects pre-insulated terminals and tubular terminals for class 5 flexible copper conductors in accordance with IEC 60228.

4.2.2. General technical requirements

PROPERTIES	PIPE TERMINAL	ROUND TERMIAL	OPEN ENDED TERMINAL	ROD TERMINAL	PIPE TERMINAL	COPPER TERMINAL
	Pre - insulated				Not pre-insulated	
Picture						
Conductor material	Electrolytic copper	Electrolytic copper	Electrolytic copper	Electrolytic copper	Electrolytic copper	Electrolytic copper (see note)
Surface finish	Tin plated	Tin plated	Tin plated	Tin plated	Tin plated	Tin plated
Operating temperature	-40 ºC to 70 ºC	-40 ºC to 70 ºC	-40 ºC to 70 ºC	-40 ºC to 70 ºC	-40 ºC to 70 ºC	-40 ºC to 120 ºC
Inspection window	-	-	-	-	-	Yes
Standard	DIN 46228/4	DIN46237/A	DIN46237/B	DIN46231	DIN46228/1	IEC 61238-1

Copper terminal (not pre-insulated) has to be electrolytically tin plated with a minimum thickness of 3µm to avoid oxidation.

4.2.3. Supply of terminals already connected

Some cables are supplied with the terminal already installed, in these cases:

1. If the terminal is pre-insulated, the conductor shall not be seen at the opposite end of the cable entrance. The conductor should not be visible at the end of the plastic insulation.
2. If the terminal is <u>not</u> pre-insulated:
   2.1. Cooper terminal: The conductor shall be seen through the inspection window. A shrink tube shall be installed from the inspection window to the cable insulation. The conductor of the cable shall not be visible.

© Siemens Gamesa Renewable Energy S.A., 2023. All rights reserved.

2.2. Pipe terminal: The conductor shall not be seen at the opposite end of the cable entrance. The conductor should not be visible at the entrance side.

4.2.4. Wide palm for power copper terminal

For the power cables with copper terminal not pre-insulated, the maximum wide palm allowed is 39mm (W measured in the picture).

4.3. Aluminium terminal lugs and bimetallic connectors for aluminium cables

4.3.1. Types of terminals

This specification affects tubular terminals (not pre-insulated) for class 2 flexible aluminium conductors in accordance with IEC 60228.

4.3.2. General technical requirements

PROPERTIES	ALUMINIUM COMPRESSION CABLE LUGS	BIMETALLIC THROUGH CONNECTORS
Picture	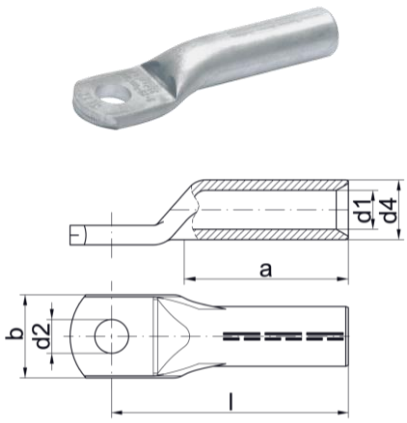	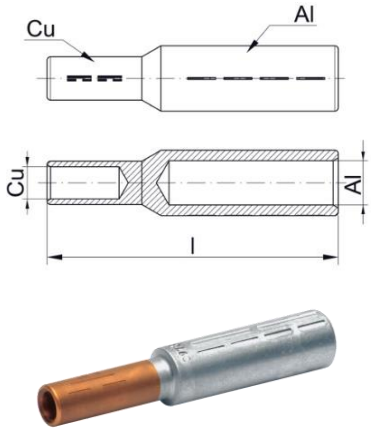
Conductor material	Aluminium	Aluminium / Copper
Material	E-Aluminum	Aluminum: E-Al Cu: Cu according to EN 13600 Connection between both materials: welding technology
Coating	Electro tinned at least 2-3µm	
Operating temperature	-40 ºC to 120 ºC	
Dimensions	Dimension according to DIN 46329-2	Tube dimension to DIN 46267-1/2
Inspection window	NO	
Crimping	With crimp markings for correct crimp positioning Manufacturer shall indicate crimping tool and process, as well as number and shape of crimps	

© Siemens Gamesa Renewable Energy S.A., 2023. All rights reserved.

PROPERTIES	ALUMINIUM COMPRESSION CABLE LUGS	BIMETALLIC THROUGH CONNECTORS
Lifetime	20 years	
Contact grease	Filled with contact grease	
Standard tests	IEC 61238-1 connectors class A	

5. Heat shrinkable tubes

This specification defines the technical and constructive characteristics required for the heat shrinkable tubes to be placed on the low voltage cables that require them.

5.1. Use

Heat-shrinkable tubes give electrical insulation and mechanical protection to the terminal-conductor union and mechanical protection for the labels of the cables.

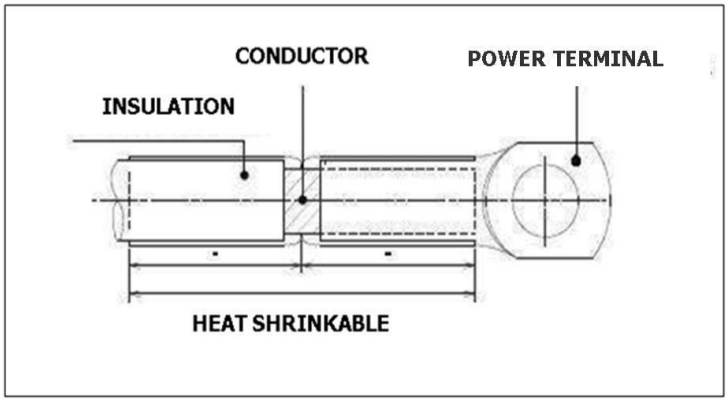

Figure 1 Overview of a heat shrink tube on the joint of a terminal with the cable

5.2. General technical requirements

- The heat shrinkable tubes must be designed to be installed on low voltage cables.
- Material: polyolefin or equivalent.
- Color: will be defined in the description of the piece in PDM.
- Diameter prior to shrinkage: will be specified in the description of the PDM piece.
- Diameter after shrinkage: will be specified in the description of the PDM piece.
- Minimum usage range: -40ºC to +125 ºC
- Temperature at the beginning of the shrinkage: ≥60ºC
- Temperature for complete shrinkage: ≤115 ºC

5.3. Heat shrinkable in power cables

The joint between the cable and the terminal, must be covering with an insulating heat shrink sleeve.

The heat shrinkable must cover from the terminal window (letting it free) to the cover of the cable and must cover at least the first 25mm of the cable cover and the terminal-cable joint.

© Siemens Gamesa Renewable Energy S.A., 2023. All rights reserved.

A transparent heat shrinkable must cover the cable labels to protect the labels from heat, humidity, oils, and abrasion during the assembly of the nacelle or maintenance operations.

5.4. Heat shrinkable in control cables

All the control cable with shield must be protected in the end. Also, when the shield is connected must be protected with heat shrinkable.

A transparent heat shrinkable must cover the cable labels to protect the labels from heat, humidity, oils, and abrasion during the assembly of the nacelle or maintenance operations.

5.5. Adhesive conductive copper tape

In order to assure better performance of the shielding, in some cases it shall require including a copper tape.

Base material:	rolled copper foil
Thickness:	approx. 40 µm
Thickness (incl. adhesive):	approx. 65 µm
Adhesive type:	conductive
Adhesive strength:	9 N/25mm
Surface resistivity:	< 0,5 Ohm/square
Temperature stability:	max. 80° C

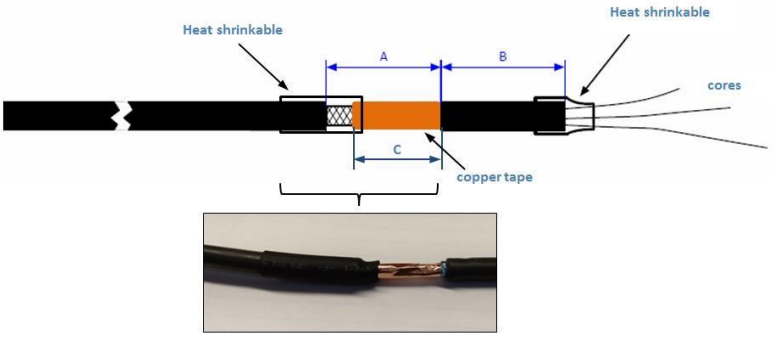

Figure 2 Overview of an adhesive copper tape on the shielding of a signal cable

6. Cable glands and nuts

6.1. Plastic cable gland and nut

Cable gland shall be manufactured in polyamide 6 with hexagonal base. Watertight gasket in PVC. Degree of protection IP-66 according to UNE 20324, DIN-40050 and CEI-529. Thread Metric according to ISO 261, IEC 60423. Metric thread. (DIN 40430 PG thread not allowed) Insulating and no magnetic material.

© Siemens Gamesa Renewable Energy S.A., 2023. All rights reserved.

Figure 3 Cable gland of polyamide

DESCRIPTION	CABLE DIAMETER
Polyamide compression gland M12x1.5	3-6.5 mm
Polyamide compression gland M16x1.5	5-10 mm
Polyamide compression gland M20x1.5	6-12 mm
Polyamide compression gland M20x1.5	10-14 mm
Polyamide compression gland M25x1.5	13-18 mm
Polyamide compression gland M32x1.5	18-25 mm
Polyamide compression gland M40x1.5	22-32 mm
Polyamide compression gland M50x1.5	30-38 mm
Polyamide compression gland M63x1.5	34-44 mm

Table 1 Metric of the plastic cable gland vs range of the cable diameter

6.2. Metallic cable gland and nut

Cable gland must be manufactured in brass nickel plated. with hexagonal base. Protection degree IP-54 according to UNE 20324, DIN-40050 and CEI-529. Thread Metric according to ISO 261, IEC 60423. Metric thread. (DIN 40430 PG thread not allowed).

Figure 4 Metallic cable gland

DESCRIPTION	CABLE DIAMETER
Metallic compression gland M12x1.5	3-6.5 mm
Metallic compression gland M16x1.5	4-8 mm
Metallic compression gland M20x1.5	6-12 mm

© Siemens Gamesa Renewable Energy S.A., 2023. All rights reserved.

DESCRIPTION	CABLE DIAMETER
Metallic compression gland M25x1.5	10-14 mm
Metallic compression gland M32x1.5	13-18 mm
Metallic compression gland M40x1.5	18-25 mm
Metallic compression gland M50x1.5	22-32 mm
Metallic compression gland M63x1.5	34-44 mm

Table 2 Metric of the metallic cable gland vs range of the cable diameter

6.3. General technical requirements

Protection class: ≥ IP54 according to IEC 60529.

Clamping range: at least 23mm-32mm

Working temperature (permanent): -30ºC to +100ºC

- Minimum working temperature (intermittent): -40ºC; under this temperature the cable gland and nut will not suffer mechanical stress or impacts.
- Maximum working temperature (intermittent): +120ºC; only applicable to cable glands and nuts used in generator stator's box.

Materials:

- The cable glands and nuts to be installed in the generator stator's box will be made of nickel-plated brass.
- The cable glands and nuts to be installed in the generator rotor's box and in the Top cabinet will be made of nickel-plated brass or plastic material (eg polyamide 6).

Tensile Strength: ≥ 50N/mm2 (at 25ºC ± 5ºC) according to DIN 53455.

Anti-corrosion: if metallic cable glands and nuts are used, these must be adequate to be used in C3H environments according to ISO 2944.

Other environment requirements: cable glands and nuts must be able to withstand continuous industrial vibrations.

Kits: if the cable glands and the nuts are supplied as a kit, both of them must be manufactured by the same supplier and be done with the same materials.

6.4. Technical documentation

The Supplier must send a technical datasheet and dimensional drawings and identify the material used in both cable glands and its seal.

6.5. Marking

Siemens-Gamesa reserves the right to request that cable glands are marked according to local regulations, for example CE for European market or UL for USA market.

7. Boxes

© Siemens Gamesa Renewable Energy S.A., 2023. All rights reserved.

7.1. Use

This specification defines the technical and constructive characteristics required for the connection boxes that are going to be installed in the Nacelle of the 2.0MW wind turbines of Siemens-Gamesa.

7.2. General requirements

The boxes must be designed and manufactured to install low voltage electrical elements inside.

The box will have an electrical hazard warning signal on it:

Figure 5 Auxiliary box with an electrical shock hazard label

The presence of this label indicates an electrical shock hazard exists in the location or area where the label is placed. Restrict service to qualified personnel only.

Graphic symbol: 60417-2-IEC-5036, and completely in compliance with symbol B.3.6 of ISO 3864.

Dimensions (Triangle): 60mm.

Box label shall be a rectangle (80x30) mm, text font: Tahoma, size 10.

Location: As shown in the image above, both labels shall be clearly visible over the door or cover of the enclosure.

All of the terminal block swill be installed on the 35mm DIN rail.

The relative position of the cable inputs and the terminal blocks will facilitate the connection of the cables.

The terminal blocks will be numbered in accordance with the drawings provided by Gamesa.

The internal connection of the box will be done in accordance with the drawing.

Ground terminal blocks must be marked (by a symbol or by full color uniformity of yellow-green). End stops will be placed on both sides of the terminal blocks.

The ground terminal blocks may substitute one of the terminal block end stops providing that the ground terminal blocks can functions as a terminal stop.

Terminal block end covers will be placed on those terminal blocks that are not adequately protected from direct or indirect contact once they are installed.

The terminal blocks will be screw or spring type and vibration resistant.

© Siemens Gamesa Renewable Energy S.A., 2023. All rights reserved.

The installed terminal blocks must comply with IEC regulation 60947-7-1.

The configuration of the terminal blocks of the boxes that appear in this specification may be changed with the approval of Siemens-Gamesa.

All of the cables must be connected with pre-insulated terminal blocks.

All of the cable inputs will be equipped with **GADI** type cable glands. The cable glands will be provided by the supplier. The type of cable glands will be agreed upon between Siemens-Gamesa and the supplier during the design phase.

Glands to be installed in the interconnection boxes have to be chosen with the target that the cable diameter range is in the middle of the gland clamping diameter range.

The hardware necessary for securing the box in the nacelle will be provided by the supplier. The hardware must come inside of a bag on the inside of each box.

Given that there are different box models with different dimensions. The box is allowed to have an adaptor to fix it in the nacelle. Said adaptor must be provided by the supplier.

All the metal boxes and metal fastening elements must have, at least, a C4H degree of protection from corrosion in accordance with regulation ISO12944 – Paints and varnishes-.

An installation test will be conducted on each box in its corresponding area inside the nacelle. This installation test will help to verify that the boxes can be installed and no interferences with other nacelle components exist.

Other technical requirements:

REQUIREMENT	VALUE
Flame resistance (does not apply to metal boxes)	UL94 HB
Operating temperature (plastic box)	-40 +60ºC
Operating temperature (metal box)	-40 +80ºC
IP protection	IP55
IK protection (does not apply to metal boxes)	IK06
Method for closing the cover	With bolts

7.3. A6 box

PDM part and drawing: GP233750.

7.3.1. Use

Connection between the cup anemometer, the wind vane, the sonic and the PLC.

7.3.2. Type

Material: polycarbonate or ABS.

© Siemens Gamesa Renewable Energy S.A., 2023. All rights reserved.

7.3.3. Cable entrances

It will have 8 cable entrances, set according to the diagram.

7.3.4. Connection terminal blocks

The inside of the box will have the following terminal blocks:

- 7 single pole terminal blocks for 2.5mm^2 cables, insulated for at least 230V.
- 3 double level terminal blocks for 4mm^2 cables, insulated for at least 230V.
- 3 double level terminal blocks for 2.5mm^2 cables, insulated for at least 230V.
- 1 ground terminal block for 2.5mm^2 cables, insulated for at least 230V.
- 1 ground terminal block for 4mm^2 cables, insulated for at least 230V.

7.3.5. Fastening of the box

The box will be fixed to a 2mm thick plate with four through holes that are 7mm in diameter.

7.3.6. Other components

The box must include the necessary hardware; so that the fixing system does not emerge too much by the rear side and that it has no mechanical risk to people.

It is recommended that the screws complying with ISO 4762.

The box must include two plugs that came installed in the cable gland indicated in the drawing.

The inside of the box will contain a signal conversion card (NPN -> PNP) with the following characteristics (signal conversion card, code 9010623 or similar):

	NPN to PNP converter card
Operation Voltage range	+24Vdc ±10%
Current consumption	≤100mA
Voltage drop	<1V
Maximum Residual current	<1mA
Operation frequency	> 573Hz
Output type	**PNP open collector.**
Input type	**NPN open collector.**
Load output current (PNP)	0 - ≥100mA.
Load input current (NPN)	< 4mA
Number of inputs and outputs	**≥2**
Input/output voltage levels (switching thresholds)	Maximum low level voltage < +5Vdc Minimum high level voltage > +15Vdc
Installation	DIN RAIL
Protection circuits	Output reverse polarity protection.
	Power source circuit reverse polarity protection.
	Surge suppressor.
	Short-circuit protection.

© Siemens Gamesa Renewable Energy S.A., 2023. All rights reserved.

Maximum Dimensions		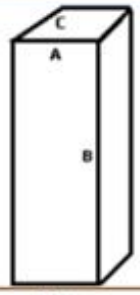
	A	33mm
	B	80mm
	C	50mm
Protection degree		IP20
Ambient air temperature		Operating: -25ºC – +55ºC Storage: -40ºC – +60ºC
Ambient humidity		Operating: 75% to 85% Storage: 75% to 85%
Altitude		≤3000m AMSL.
Connection		Terminal block for cable ≥1mm2
Standards		**EMC Directive 89/336/EEC** **IEC 60529** **IEC 60536**

7.4. A6 box without card

PDM part and drawing: GP457858.

7.4.1. Use

Connection between the cup anemometer, the wind vane, the sonic and the PLC.

7.4.2. Type

Material: polycarbonate or ABS.

7.4.3. Cable entrances

It will have 6 cable entrances, set according to the diagram.

7.4.4. Connection terminal blocks

The inside of the box will have the following terminal blocks:

- 7 single pole terminal blocks for 2.5mm^2 cables, insulated for at least 230V.
- 3 double level terminal blocks for 4mm^2 cables, insulated for at least 230V.
- 3 double level terminal blocks for 2.5mm^2 cables, insulated for at least 230V.
- 1 ground terminal block for 2.5mm^2 cables, insulated for at least 230V.
- 1 ground terminal block for 4mm^2 cables, insulated for at least 230V.

7.4.5. Fastening of the box

The box will be fixed to a 2mm thick plate with four through holes that are 7mm in diameter.

7.4.6. Other components

© Siemens Gamesa Renewable Energy S.A., 2023. All rights reserved.

The box must include the necessary hardware; so that the fixing system does not emerge too much by the rear side and that it has no mechanical risk to people.

It is recommended that the screws complying with ISO 4762.

7.5. A6 box without card

PDM part and drawing: GP551279.

7.5.1. Use

Connection between the cup anemometer, the wind vane, the sonic and the PLC, the smoke sensor and fan motor.

7.5.2. Type

Material: polycarbonate or ABS.

7.5.3. Cable entrances

It will have 10 cable entrances, set according to the diagram.

7.5.4. Connection terminal blocks

The inside of the box will have the following terminal blocks:

- 3 single pole terminal blocks for 2.5mm^2 cables, insulated for at least 690V.
- 1 ground terminal block for 2.5mm^2 cables, insulated for at least 690V.
- 3 ground terminal blocks for 2.5mm^2 cables, insulated for at least 230V.
- 9 single pole terminal blocks for 2.5mm^2 cables, insulated for at least 230V.
- 6 double level terminal blocks for 2.5mm^2 cables, insulated for at least 230V.
- 1 end terminal block is added between signal cables terminals and the ones for 690Vac. So, the insulation of end terminal block must be at least 690V.

7.5.5. Fastening of the box

The box will be fixed to a beam 10mm thick with four through holes that are 5mm in diameter.

7.5.6. Other components

The box must include the necessary hardware; so that the fixing system does not emerge too much by the rear side and that it has no mechanical risk to people.

It is recommended that the screws complying with ISO 4762.

Electrical shock hazard label must be included on the box enclosure. The size and the standards to be fulfilled are indicated within the section 7.2.

7.6. A6 box without card

PDM part and drawing: GP413010.

7.6.1. Use

© Siemens Gamesa Renewable Energy S.A., 2023. All rights reserved.

Connection between the cup anemometer, the wind vane, the sonic and the PLC, 2 smoke sensors: one in nacelle and the other in power transformer room and motor fan.

7.6.2. Type

Material: polycarbonate or ABS.

7.6.3. Cable entrances

It will have 11 cable entrances, set according to the diagram.

7.6.4. Connection terminal blocks

The inside of the box will have the following terminal blocks:

- 3 single pole terminal blocks for 2.5mm^2 cables, insulated for at least 690V.
- 1 ground terminal block for 2.5mm^2 cables, insulated for at least 690V.
- 3 ground terminal blocks for 2.5mm^2 cables, insulated for at least 230V.
- 12 single pole terminal blocks for 2.5mm^2 cables, insulated for at least 230V. There must be 3 bridges. See box drawing.
- 6 double level terminal blocks for 2.5mm^2 cables, insulated for at least 230V.
- 1 end terminal block is added between signal cables terminals and the ones for 690Vac. So, the insulation of end terminal block must be at least 690V.

7.6.5. Fastening of the box

The box will be fixed to a beam 10mm thick with four through holes that are 5mm in diameter.

7.6.6. Other components

The box must include the necessary hardware; so that the fixing system does not emerge too much by the rear side and that it has no mechanical risk to people.

It is recommended that the screws complying with ISO 4762.

Electrical shock hazard label must be included on the box enclosure. The size and the standards to be fulfilled are indicated within the section 7.2.

7.7. A6 box without card + rain/precipitation sensor

PDM part and drawing: GP480636.

7.7.1. Use

Connection between the cup anemometer, the wind vane, the sonic and the PLC, smoke sensor, fan motor and the precipitation/rain sensor.

7.7.2. Type

Material: polycarbonate or ABS.

7.7.3. Cable entrances

© Siemens Gamesa Renewable Energy S.A., 2023. All rights reserved.

It will have 15 cable entrances, set according to the diagram.

7.7.4. Connection terminal blocks

The inside of the box will have the following terminal blocks:

- 3 single pole terminal blocks for 2.5mm^2 cables, insulated for at least 690V.
- 1 ground terminal block for 2.5mm^2 cables, insulated for at least 690V.
- 3 ground terminal blocks for 2.5mm^2 cables, insulated for at least 230V.
- 9 single pole terminal blocks for 2.5mm^2 cables, insulated for at least 230V.
- 6 double level terminal blocks for 2.5mm^2 cables, insulated for at least 230V.
- 1 end terminal block is added between signal cables terminals and the ones for 690Vac. So, the insulation of end terminal block must be at least 690V.

The set of terminal blocks for the rain/precipitation sensor will be:

- 2 end terminal blocks: one at the beginning and the other one at the end of the rain/precipitation terminal blocks.
- 2 earth terminal blocks for 2.5mm^2 cables, insulated for at least 230V.
- 2 generic overvoltage protections 24V (GP286316).
- 1 double level earth terminal block for 4mm^2 cables, insulated for at least 230V.

7.7.5. Fastening of the box

The box will be fixed to a beam 10mm thick with four through holes that are 5mm in diameter.

7.7.6. Other components

The box must include the necessary hardware; so that the fixing system does not emerge too much by the rear side and that it has no mechanical risk to people.

It is recommended that the screws complying with ISO 4762.

Electrical shock hazard label must be included on the box enclosure. The size and the standards to be fulfilled are indicated within the section 7.2.

7.8. A6 box without card

PDM part and drawing: GP551280.

7.8.1. Use

Connection between the cup anemometer, the wind vane, the sonic and the PLC, smoke sensor, fan motor and fan motor.

7.8.2. Type

Material: polycarbonate or ABS.

7.8.3. Cable entrances

It will have 10 cable entrances, set according to the diagram.

7.8.4. Connection terminal blocks

© Siemens Gamesa Renewable Energy S.A., 2023. All rights reserved.

The inside of the box will have the following terminal blocks:

- 3 single pole terminal blocks for 2.5mm^2 cables, insulated for at least 690V.
- 1 ground terminal block for 2.5mm^2 cables, insulated for at least 690V.
- 3 ground terminal blocks for 2.5mm^2 cables, insulated for at least 230V.
- 10 single pole terminal blocks for 2.5mm^2 cables, insulated for at least 230V.
- 6 double level terminal blocks for 2.5mm^2 cables, insulated for at least 230V.
- 1 end terminal block is added between signal cables terminals and the ones for 690Vac. So, the insulation of end terminal block must be at least 690V.

7.8.5. Fastening of the box

The box will be fixed to a beam 10mm thick with four through holes that are 5mm in diameter.

7.8.6. Other components

The box must include the necessary hardware; so that the fixing system does not emerge too much by the rear side and that it has no mechanical risk to people.

It is recommended that the screws complying with ISO 4762.

Electrical shock hazard label must be included on the box enclosure. The size and the standards to be fulfilled are indicated within the section 7.2.

7.9. A6A box

PDM part and drawing: 768500.

7.9.1. Use

Connection between the sonic anemometer and the PLC.

7.9.2. Type

Material: Metal.

7.9.3. Cable entrances

It will have 6 cable entrances, set according to the diagram.

7.9.4. Connection terminal blocks

The inside of the box will have the following terminal blocks:

- 6 single pole terminal blocks for 2.5mm^2 cables, insulated for at least 230V.
- 2 double level terminal blocks for 2.5mm^2 cables, internally pointed, insulated for at least 230V.
- 2 fuse carrying terminal blocks for 2.5mm^2 cables, the fuse must be 6.3 amperes.
- 3 ground terminal blocks for each 2.5mm^2 cables, insulated for at least 230V.
- The metal installation plate for all of the internal elements of the box will have a ground connection using an M6 bolt and washer. This connection will be marked with a ground symbol and must allow for the securing of a round M6 terminal and it will be set in accordance with the drawing.

7.9.5. Other components

© Siemens Gamesa Renewable Energy S.A., 2023. All rights reserved.

The inside of the box will contain the following components installed inside:

- A 120VA 230/24 Vac toroidal transformer, in accordance with specification GD031214.
- Two varistors connected to the 24 Vac terminal blocks such that the pins are adequately insulated.

7.10. A6A box

PDM part and drawing: GP468029.

7.10.1. Use

Connection between the sonic anemometer and the PLC.

7.10.2. Type

Material: polycarbonate or ABS.

7.10.3. Cable entrances

It will have 6 cable entrances, set according to the diagram.

7.10.4. Connection terminal blocks

The inside of the box will have the following terminal blocks:

- 6 single pole terminal blocks for 2.5mm^2 cables, insulated for at least 230V.
- 2 double level terminal blocks for 2.5mm^2 cables, internally pointed, insulated for at least 230V.
- 2 fuse carrying terminal blocks for 2.5mm^2 cables, the fuse must be 8 amperes.
- 3 ground terminal blocks for each 2.5mm^2 cables, insulated for at least 230V.
- The metal installation plate for all of the internal elements of the box will have a ground connection using an M6 bolt and washer. This connection will be marked with a ground symbol and must allow for the securing of a round M6 terminal and it will be set in accordance with the drawing.

7.10.5. Other components

The inside of the box will contain the following components installed inside:

- A 300VA 230/48 Vac toroidal transformer, in accordance with specification GD269109.
- Two varistors connected to the 48 Vac terminal blocks such that the pins are adequately insulated.

7.11. A6C box

PDM part and drawing: GP008641.

7.11.1. Use

Connection between the cup anemometer, the wind vane and the PLC.

7.11.2. Type

Material: Metal.

7.11.3. Cable entrances

© Siemens Gamesa Renewable Energy S.A., 2023. All rights reserved.

It will have 6 cable entrances, set according to the diagram.

7.11.4. Connection terminal blocks

The inside of the box will have the following terminal blocks:

- 5 single pole terminal blocks for 2.5mm^2 cables, insulated for at least 230V.
- 2 single pole terminal blocks for 4mm^2 cables, insulated for at least 230V.
- 2 double level terminal blocks for 2.5mm^2 cables, internally pointed, insulated for at least 230V.
- 3 ground terminal blocks for each 2.5mm^2 cables, insulated for at least 230V.
- The metal installation plate for all of the internal elements of the box will have a ground connection using an M6 bolt and washer. This connection will be marked with a ground symbol and must allow for the securing of a round M6 terminal and it will be set in accordance with the drawing.

7.11.5. Other components

The inside of the box will contain the following components installed inside:

- A 300VA 230/24 Vac toroidal transformer, in accordance with specification GD031214.
- Two varistors connected to the 24 Vac terminal blocks such that the pins are adequately insulated.
- Signal conversion card, code 9010623.

7.12. A6C box without card

PDM part and drawing: GP425367.

7.12.1. Use

Connection between the cup anemometer, the wind vane and the PLC.

7.12.2. Type

Material: Metal.

7.12.3. Cable entrances

It will have 5 cable entrances, set according to the diagram.

7.12.4. Connection terminal blocks

The inside of the box will have the following terminal blocks:

- 5 single pole terminal blocks for 2.5mm^2 cables, insulated for at least 230V.
- 2 single pole terminal blocks for 4mm^2 cables, insulated for at least 230V.
- 2 double level terminal blocks for 2.5mm^2 cables, internally pointed, insulated for at least 230V.
- 3 ground terminal blocks for each 2.5mm^2 cables, insulated for at least 230V.
- The metal installation plate for all of the internal elements of the box will have a ground connection using an M6 bolt and washer. This connection will be marked with a ground symbol and must allow for the securing of a round M6 terminal and it will be set in accordance with the drawing.

7.12.5. Other components

The inside of the box will contain the following components installed inside:

© Siemens Gamesa Renewable Energy S.A., 2023. All rights reserved.

- A 300VA 230/24 Vac toroidal transformer, in accordance with specification GD031214.
- Two varistors connected to the 24 Vac terminal blocks such that the pins are adequately insulated.
- Signal conversion card, code 9010623.

7.13. A8 box

PDM part and drawing: 768502.

7.13.1. Use

Connection between the gearbox sensors and the control cabinet.

7.13.2. Type

Material: polycarbonate or ABS.

7.13.3. Cable entrances

It will have 7 cable entrances, set according to the diagram.

7.13.4. Connection terminal blocks

The inside of the box will have the following terminal blocks:

- 14 single pole terminal blocks for 2.5mm^2 cables, insulated for at least 230V.
- 6 shield terminal blocks for collection bar for shielding a ∅8mm cable.
- 1 shield terminal blocks for collection bar for shielding a ∅12mm cable.

7.13.5. Fastening of the box

The box will be fixed to a 4mm thick plate with four through holes that are 5mm in diameter.

7.13.6. Other components

The box must include the necessary hardware. The screws should protrude from 3 to 5 mm of the nut, once mounted in the plate (thickness = 4 mm)

The inside of the box will contain the following components installed:

- A collection bar with shield terminals.
- Two bar holders for the collector bar.

7.14. A9 box G8/G9X

Not valid for G114 (see 7.11).

Not valid for G9X. It is removed for electrostatic improvement.

PDM part and drawing: C393228.

7.14.1. Use

Connection between the inductive sensors located in the rotor and the control cabinet.

© Siemens Gamesa Renewable Energy S.A., 2023. All rights reserved.

7.14.2. Type

Material: polycarbonate or ABS.

7.14.3. Cable entrances

It will have 5 cable entrances, set according to the diagram.

7.14.4. Connection terminal blocks

The inside of the box will have the following terminal blocks:

- 14 single pole terminal blocks for 2.5mm^2 cables, insulated for at least 230V.
- 6 shield terminal blocks for collection bar for shielding a ∅8mm cable.
- 1 shield terminal blocks for collection bar for shielding a ∅12mm cable.

7.14.5. Fastening of the box

The box will be fastened at 4 points, these points correspond to an M4 threaded profile with a threaded depth of 15mm.

7.14.6. Other components

The box must include the necessary hardware.

The inside of the box will contain the following components installed:

- A collection bar with shield terminals.
- Two bar holders for the collector bar.

7.15. A9 box G114

PDM part and drawing: GP235635.

7.15.1. Use

Connection between the inductive sensors located in the rotor and the control cabinet. And it is also included the connection of the ambient temperature sensor.

7.15.2. Type

Material: polycarbonate or ABS.

7.15.3. Cable entrances

It will have 6 cable entrances, set according to the diagram.

7.15.4. Connection terminal blocks

The inside of the box will have the following terminal blocks:

- 4 double level terminal blocks for 2.5mm^2 cables, insulated for at least 230V.
- 10 single pole terminal blocks for 2.5mm^2 cables, insulated for at least 230V.
- 5 shield terminal blocks for collection bar for shielding a ∅8mm cable.

© Siemens Gamesa Renewable Energy S.A., 2023. All rights reserved.

- 1 shield terminal blocks for collection bar for shielding a ∅12mm cable.

7.15.5. Fastening of the box

The box will be fastened at 4 points; these points correspond to an M4 threaded profile with a threaded depth of 8mm.

There is no access to the rear side of the fixation so that the use of the nut is not allowed.

The screw must not emerge more than 4mm of the profile.

7.15.6. Other components

The box must include the necessary hardware.

The inside of the box will contain the following components installed:

- A collection bar with shield terminals.
- Two bar holders for the collector bar.

7.16. A9 box G114

PDM part and drawing: GP368911.

7.16.1. Use

Connection between the inductive sensors located in the rotor and the control cabinet. And it is also included the connection of the ambient temperature sensor.

In this case, the temperature measure is connected with a dedicated cable from the A9 box to the TOP control cabinet.

7.16.2. Type

Material: polycarbonate or ABS.

7.16.3. Cable entrances

It will have 7 cable entrances, set according to the diagram.

7.16.4. Connection terminal blocks

The inside of the box will have the following terminal blocks:

- 4 double level terminal blocks for 2.5mm^2 cables, insulated for at least 230V.
- 10 single pole terminal blocks for 2.5mm^2 cables, insulated for at least 230V.
- 5 shield terminal blocks for collection bar for shielding a ∅8mm cable.
- 1 shield terminal blocks for collection bar for shielding a ∅12mm cable.

7.16.5. Fastening of the box

The box will be fastened at 4 points; these points correspond to an M4 threaded profile with a threaded depth of 8mm.

© Siemens Gamesa Renewable Energy S.A., 2023. All rights reserved.

There is no access to the rear side of the fixation so that the use of the nut is not allowed.

The screw must not emerge more than 4mm of the profile.

7.16.6. Other components

The box must include the necessary hardware.

The inside of the box will contain the following components installed:

- A collection bar with shield terminals.
- Two bar holders for the collector bar.

7.17. A9 box G114

PDM part and drawing: GP468309. It is applicable from MY2017.

7.17.1. Use

Connection between the inductive sensors located in the rotor and the control cabinet. And it is also included the connection of the ambient temperature sensor.

7.17.2. Type

Material: polycarbonate or ABS.

7.17.3. Cable entrances

It will have 7 cable entrances, set according to the diagram.

7.17.4. Connection terminal blocks

The inside of the box will have the following terminal blocks:

- 4 double level terminal blocks for 2.5mm^2 cables, insulated for at least 230V.
- 11 single pole terminal blocks for 2.5mm^2 cables, insulated for at least 230V.
- 5 shield terminal blocks for collection bar for shielding a ∅8mm cable.
- 1 shield terminal blocks for collection bar for shielding a ∅12mm cable.

7.17.5. Fastening of the box

The box will be fastened at 4 points; these points correspond to an M4 threaded profile with a threaded depth of 8mm.

There is no access to the rear side of the fixation so that the use of the nut is not allowed.

The screw must not emerge more than 4mm of the profile.

7.17.6. Other components

The box must include the necessary hardware.

The inside of the box will contain the following components installed:

© Siemens Gamesa Renewable Energy S.A., 2023. All rights reserved.

- A collection bar with shield terminals.
- Two bar holders for the collector bar.

7.18. A14 box

PDM part and drawing: 727666.

7.18.1. Use

Connection of the gearbox heaters (690Vac).

7.18.2. Type

Material: polycarbonate or ABS.

7.18.3. Cable entrances

It will have 4 cable entrances, set according to the diagram.

One of the cable entrances will be blocked with a cap, see diagram.

7.18.4. Connection terminal blocks

The inside of the box will have the following terminal blocks:

- 6 single pole terminal blocks for 2.5mm^2 cables, insulated for at least 690V.
- 3 ground terminal blocks for 2.5mm^2 cables, insulated for at least 690V.

7.18.5. Fastening of the box

The box will be fixed to a 4mm thick plate with four through holes that are 5mm in diameter.

7.18.6. Other components

The box must include the necessary hardware. The screws should protrude from 3 to 5 mm of the nut, once mounted in the plate (thickness = 4 mm).

7.19. A15 box

PDM part and drawing: 747667 (fans 20W), GP021387 (fans 90W), GD013008.

7.19.1. Use

Connection of the transformer fans.

7.19.2. Type

Material: polycarbonate or ABS.

7.19.3. Cable entrances

It will have 7 cable entrances, set according to the diagram.

© Siemens Gamesa Renewable Energy S.A., 2023. All rights reserved.

7.19.4. Connection terminal blocks

The inside of the box will have the following terminal blocks:

- 3 double level terminal blocks for 2.5mm^2 cables, insulated for at least 230V.
- 7 double level terminal blocks for 2.5mm^2 cables, internally pointed, insulated for at least 230V.
- 3 ground terminal blocks for 2.5mm^2 cables, insulated for at least 230V.

7.19.5. Other components

The inside of the box will contain the following components installed inside:

Box for the 20W fan power supply (747667): 6 capacitors of 2.0µf for 400V and connected in accordance with the diagram.

90W fan power supply box (GP021387): 6 capacitors of 6.3µf for 450V and connected in accordance with the diagram.

7.20. A16 box

PDM part and drawing: 747668.

7.20.1. Use

Connection of the transformer fan thermistors.

7.20.2. Type

Material: polycarbonate or ABS.

7.20.3. Cable entrances

It will have 7 cable entrances, set according to the diagram.

7.20.4. Connection terminal blocks

The inside of the box will have the following terminal blocks:

- 12 terminal blocks for 2.5mm^2 cables, insulated for at least 230V.

7.21. A20 box

PDM part and drawing: GP009563.

7.21.1. Use

Connecting of fuses, transformer’s doors switches and arc detecting sensors.

7.21.2. Type

Material: polycarbonate or ABS.

7.21.3. Cable entrances

© Siemens Gamesa Renewable Energy S.A., 2023. All rights reserved.

It will have 9 cable entrances, set according to the diagram.

7.21.4. Connection terminal blocks

The inside of the box will have the following terminal blocks:

- 7 double level terminal blocks for 2.5mm^2 cables, insulated for at least 230V.
- 1 earth terminal block of 1.5mm^2 for the shield connection of the arc detector cables.

7.21.5. Other components

The inside of the box will contain the following components installed inside: A terminal end stops for the separation of the terminal blocks of the arc detectors with the rest of the terminal blocks.

7.22. A20 box

A20 Box in the case of wind turbine with the transformer 400 Vac to supply of the auxiliary services. PDM part and drawing: GP410594.

7.22.1. Use

Connecting of fuses, transformer's doors switches and arc detecting sensors.

7.22.2. Type

Material: polycarbonate or ABS.

7.22.3. Cable entrances

It will have 12 cable entrances, set according to the diagram.

7.22.4. Connection terminal blocks

The inside of the box will have the following terminal blocks:

- 12 double level terminal blocks for 2.5mm^2 cables, insulated for at least 230V.
- 1 earth terminal block of 1.5mm^2 for the shield connection of the arc detector cables.

7.22.5. Other components

The inside of the box will contain the following components installed inside: A terminal end stops for the separation of the terminal blocks of the arc detectors with the rest of the terminal blocks.

7.23. A21 box

PDM part and drawing: GP308611.

7.23.1. Use

Connecting of emergency push button and medium voltage trip button.

7.23.2. Type

Material: polycarbonate or ABS.

© Siemens Gamesa Renewable Energy S.A., 2023. All rights reserved.

Color: Yellow – RAL1021.

7.23.3. Cable entrances

It will have one cable entrance, set according to the diagram.

7.23.4. Other components

The box will contain the following components, set according to the diagram.

Emergency push button:

DESCRIPTION	SUPPLIER CODE/MANUFACTURER	GAMESA CODE	QUANTITY
Normally close contact (NC)	ABB MCB-01 (1SFA611610R1010)	GP019517	2
Emergency Red push button (Ø40mm) * + suppor for 3 contacts	ABB MPMT3-10R (1SFA611510T1001)	GP192358	1
Normally open contact (NO)	ABB MCBH-10 (1SFA611605R1101)	GP194540	1
Label		IDT0001	1

* According to IEC60947-5-5.

Medium voltage switch gear trip button:

DESCRIPTION	SUPPLIER CODE/MANUFACTURER	GAMESA CODE	QUANTITY
Normally open contact (NO)	ABB MCBH-10 (1SFA 611 605 R1101)	GP194540	1
Button + support for one Contact.	ABB MP1-10B (1SFA611100R1006)	GP007884	1

© Siemens Gamesa Renewable Energy S.A., 2023. All rights reserved.

DESCRIPTION	SUPPLIER CODE/MANUFACTURER	GAMESA CODE	QUANTITY
Label	 Text size: 6mm. Text type: Tahoma. Text color: Black. Back color: White.		1
Sticker		GP267505	1

7.24. A32 box G8X

Not valid for G97 (see 7.21).

Not valid for G114 (see 7.22).

PDM part and drawing: C393229.

7.24.1. Use

Connection of the sensors and actuators located in the hydraulic set.

7.24.2. Type

Material: polycarbonate or ABS.

7.24.3. Cable entrances

It will have 8 cable entrances, set according to the diagram.

7.24.4. Connection terminal blocks

The inside of the box will have the following terminal blocks:

© Siemens Gamesa Renewable Energy S.A., 2023. All rights reserved.

- 14 single pole terminal blocks for 2.5mm^2 cables, insulated for at least 230V.
- 6 shield terminal blocks for collection bar for shielding a ∅8mm cable.
- 2 shield terminal blocks for collection bar for shielding a ∅12mm cable.

7.24.5. Fastening of the box

The box will be fixed to a 4mm thick plate with four through holes that are 5mm in diameter.

7.24.6. Other components

The box must include the necessary hardware.

The inside of the box will contain the following components installed: A collection bar with shield terminals.

7.25. A32 box G9X

Only for G97 wind turbines.

Not valid for G114 (see 7.22).

PDM part and drawing: GP117937.

7.25.1. Use

Connection of the sensors and actuators located in the hydraulic set.

7.25.2. Type

Material: polycarbonate or ABS.

7.25.3. Cable entrances

It will have 10 cable entrances, set according to the diagram.

7.25.4. Connection terminal blocks

The inside of the box will have the following terminal blocks:

- 16 single pole terminal blocks for 2.5mm^2 cables, insulated for at least 230V.
- 8 single earth pole terminal blocks for 2.5mm^2 cables, insulated for at least 230V.

7.25.5. Fastening of the box

The box will be fixed to a 4mm thick plate with four through holes that are 5mm in diameter.

7.25.6. Other components

The box must include the necessary hardware.

7.26. A32 box G9X

Only for G97 wind turbines.

© Siemens Gamesa Renewable Energy S.A., 2023. All rights reserved.

Not valid for G114 (see 7.22).

PDM part and drawing: GP514984.

7.26.1. Use

Connection of the sensors and actuators located in the hydraulic set.

7.26.2. Type

Material: polycarbonate or ABS.

7.26.3. Cable entrances

It will have 10 cable entrances, set according to the diagram.

7.26.4. Connection terminal blocks

The inside of the box will have the following terminal blocks:

- 17 single pole terminal blocks for 2.5mm^2 cables, insulated for at least 230V.
- 7 single earth pole terminal blocks for 2.5mm^2 cables, insulated for at least 230V.

7.26.5. Fastening of the box

The box will be fixed to a 4mm thick plate with four through holes that are 5mm in diameter.

7.26.6. Other components

The box must include the necessary hardware.

7.27. A32 box G114

Only for G97 wind turbines.

PDM part and drawing: GP233763.

7.27.1. Use

Connection of the sensors and actuators located in the hydraulic set.

7.27.2. Type

Material: polycarbonate or ABS.

7.27.3. Cable entrances

It will have 11 cable entrances, set according to the diagram.

7.27.4. Connection terminal blocks

The inside of the box will have the following terminal blocks:

- 18 single pole terminal blocks for 2.5mm^2 cables, insulated for at least 230V.

© Siemens Gamesa Renewable Energy S.A., 2023. All rights reserved.

- 9 single earth pole terminal blocks for 2.5mm^2 cables, insulated for at least 230V.

7.27.5. Fastening of the box

The box will be fixed to a 4mm thick plate with four through holes that are 5mm in diameter.

7.27.6. Other components

The box must include the necessary hardware.

7.28. A32 box G114

Only for G97 wind turbines.

PDM part and drawing: GP399585.

7.28.1. Use

Connection of the sensors and actuators located in the hydraulic set. The temperature sensor connection is also included. In this case, the temperature measure is connected with a dedicated cable from the A32 box to the TOP control cabinet.

7.28.2. Type

Material: polycarbonate or ABS.

7.28.3. Cable entrances

It will have 12 cable entrances, set according to the diagram.

7.28.4. Connection terminal blocks

The inside of the box will have the following terminal blocks:

- 19 single pole terminal blocks for 2.5mm^2 cables, insulated for at least 230V.
- 8 single earth pole terminal blocks for 2.5mm^2 cables, insulated for at least 230V.

7.28.5. Fastening of the box

The box will be fixed to a 4mm thick plate with four through holes that are 5mm in diameter.

7.28.6. Other components

The box must include the necessary hardware.

7.29. A32 box G122 MY19

Only for G114 wind turbines.

PDM part and drawing: GP425096.

7.29.1. Use

© Siemens Gamesa Renewable Energy S.A., 2023. All rights reserved.

Connection of the sensors and actuators located in the hydraulic set. The temperature sensor connection is also included. In this case, the temperature measure is connected with a dedicated cable from the A32 box to the TOP control cabinet.

7.29.2. Type

Material: polycarbonate or ABS.

7.29.3. Cable entrances

It will have 12 cable entrances, set according to the diagram.

7.29.4. Connection terminal blocks

The inside of the box will have the following terminal blocks:

- 20 single pole terminal blocks for 2.5mm^2 cables, insulated for at least 230V.
- 8 single earth pole terminal blocks for 2.5mm^2 cables, insulated for at least 230V.

7.29.5. Fastening of the box

The box will be fixed to a 4mm thick plate with four through holes that are 5mm in diameter.

7.29.6. Other components

The box must include the necessary hardware.

7.30. A35 box

PDM part and drawing: C393231.

7.30.1. Use

Connection of additional gearbox filter.

7.30.2. Type

Material: polycarbonate or ABS.

7.30.3. Cable entrances

It will have 4 cable entrances, set according to the diagram.

7.30.4. Connection terminal blocks

The inside of the box will have the following terminal blocks:

- 6 single pole terminal blocks for 2.5mm^2 cables, insulated for at least 230V.
- 3 shield terminal blocks for collection bar for shielding a ∅8mm cable.
- 1 shield terminal block for collection bar for shielding a ∅12mm cable.

7.30.5. Fastening of the box

The box will be fixed to a 4mm thick plate with four through holes that are 5mm in diameter.

© Siemens Gamesa Renewable Energy S.A., 2023. All rights reserved.

7.30.6. Other components

The box must include the necessary hardware. The screws should protrude from 3 to 5 mm of the nut, once mounted in the plate (thickness = 4 mm).

The inside of the box will contain the following components installed:

- A collection bar with shield terminals.
- Two bar holders for the collector bar.

7.31. A38 box

PDM part and drawing: GP238973.

7.31.1. Use

Connection of gearbox filter and sensors to TOP control cabinet.

7.31.2. Type

Material: polycarbonate or ABS.

7.31.3. Cable entrances

It will have 9 cable entrances, set according to the diagram.

7.31.4. Connection terminal blocks

The inside of the box will have the following terminal blocks:

- 6 double level terminal blocks for 2.5mm^2 cables, insulated for at least 230V.
- 4 single pole terminal blocks for 2.5mm^2 cables, insulated for at least 230V
- 3 single earth pole terminal blocks for 2.5mm^2 cables, insulated for at least 230V.
- 3 double level earth pole terminal blocks for 2.5mm^2 cables, insulated for at least 230V.
- 1 shield connection terminal block for DIN rail installation, for cable between 8-12mm.

7.31.5. Fastening of the box

The box should have four through holes that are 5mm in diameter.

7.32. A38 box G114

PDM part and drawing: GP399583.

7.32.1. Use

Connection of gearbox filter and sensors to TOP control cabinet. The temperature sensor connection it is also included. In this case, the temperature measure is connected with a dedicated cable from the A38 box to the TOP control cabinet.

7.32.2. Type

Material: polycarbonate or ABS.

7.32.3. Cable entrances

© Siemens Gamesa Renewable Energy S.A., 2023. All rights reserved.

It will have 11 cable entrances, set according to the diagram.

7.32.4. Connection terminal blocks

The inside of the box will have the following terminal blocks:

- 6 double level terminal blocks for 2.5mm^2 cables, insulated for at least 230V.
- 6 single pole terminal blocks for 2.5mm^2 cables, insulated for at least 230V
- 1 single earth pole terminal blocks for 2.5mm^2 cables, insulated for at least 230V.
- 3 double level earth pole terminal blocks for 2.5mm^2 cables, insulated for at least 230V.
- 1 shield connection terminal block for DIN rail installation, for cable between 8-12mm.

7.32.5. Fastening of the box

The box should have four through holes that are 5mm in diameter.

7.33. A38 box G122 MY19

PDM part and drawing: GP425095.

7.33.1. Use

Connection of gearbox filter and sensors to TOP control cabinet. The temperature sensor connection it is also included. In this case, the temperature measure is connected with a dedicated cable from the A38 box to the TOP control cabinet.

7.33.2. Type

Material: polycarbonate or ABS.

7.33.3. Cable entrances

It will have 11 cable entrances, set according to the diagram.

7.33.4. Connection terminal blocks

The inside of the box will have the following terminal blocks:

- 6 double level terminal blocks for 2.5mm^2 cables, insulated for at least 230V.
- 8 single pole terminal blocks for 2.5mm^2 cables, insulated for at least 230V
- 1 single earth pole terminal blocks for 2.5mm^2 cables, insulated for at least 230V.
- 3 double level earth pole terminal blocks for 2.5mm^2 cables, insulated for at least 230V.
- 1 shield connection terminal block for DIN rail installation, for cable between 8-12mm.

7.33.5. Fastening of the box

The box should have four through holes that are 5mm in diameter.

7.34. A82 box

PDM part and drawing: GP233760 and GP240742.

7.34.1. Use

Connection of the lifting crane power supply (690Vac).

© Siemens Gamesa Renewable Energy S.A., 2023. All rights reserved.

7.34.2. Type

Material: polycarbonate or ABS with transparent window.

7.34.3. Cable entrances

It will have 2 cable entrances, set according to the diagram.

7.34.4. Connection terminal blocks

The inside of the box will have the following terminal blocks:

- 1 single pole ground terminal blocks for 2.5mm^2 cables, insulated for at least 690V.

7.34.5. Fastening of the box

The box will be fixed to a 2mm thick plate with four through holes that are 7mm in diameter.

7.34.6. Other components

The box must include the necessary hardware; so that the fixing system does not emerge too much by the rear side and that it has no mechanical risk to people.

It is recommended that the screws complying with ISO 4762.

The following components will be installed inside the box: Circuit breaker protection depending on lifting crane model used:

	GP233760	GP240742
Manufacture	ABB	
Model	MS132 – 4	MS132 – 6.3
Adjustment	2.9A	6A
Label	FG064	

It must be easy to access to the circuit breaker protection without opening or removing the box.

The circuit breaker must be protected through a transparent door that allows to see the protection state and setting.

7.35. A101 box

PDM part and drawing: GP005818.

7.35.1. Use

Connection of the power supply of the motors of the flux gates.

7.35.2. Type

© Siemens Gamesa Renewable Energy S.A., 2023. All rights reserved.

Material: polycarbonate or ABS.

7.35.3. Cable entrances

It will have 4 cable entrances, set according to the diagram.

7.35.4. Connection terminal blocks

The inside of the box will have the following terminal blocks:

- 7 single pole terminal blocks for 2.5mm^2 cables, insulated for at least 230V.
- 2 single pole ground terminal blocks for 2.5mm^2 cables, insulated for at least 230V.

7.36. A102 box

PDM part and drawing: GP005819.

7.36.1. Use

Connection of the power supply of the motors of the flux gates.

7.36.2. Type

Material: polycarbonate or ABS.

7.36.3. Cable entrances

It will have 4 cable entrances, set according to the diagram.

7.36.4. Connection terminal blocks

The inside of the box will have the following terminal blocks:

- 7 single pole terminal blocks for 2.5mm^2 cables, insulated for at least 230V.
- 2 single pole ground terminal blocks for 2.5mm^2 cables, insulated for at least 230V.

7.37. JB314 box

PDM part and drawing: GP505453 (GD440236).

7.37.1. Use

Smoke Audible System (SSAS) Interconnection box for powering and controlling the sensors included in the circuit. The box is located at the yaw zone.

7.37.2. Type

Material: polycarbonate or ABS.

7.37.3. Cable entrances

It will have 3 cable entrances, set according to the diagram.

7.37.4. Connection terminal blocks

The inside of the box will have the following connection terminal blocks:

© Siemens Gamesa Renewable Energy S.A., 2023. All rights reserved.

- 1 earthing terminal block of three connections for 2.5mm^2 cables, insulated for at least 230V.
- 2 terminal blocks of three connections 2.5mm^2 cables, insulated for at least 230V.
- 2 single pole terminal blocks for 2.5mm^2 cables, insulated for at least 230V.

7.38. JB861 box

PDM part and drawing: GP559537.

7.38.1. Use

Overvoltage protection box for beacon. The box is located in the nacelle. For more details, please check the RD document: GD452206

7.38.2. Documentation to be delivered by the supplier

- Detailed 2D drawings, in dxf or dwg format.
- Box specifications sheet.
- Specifications sheet for the internal components of the connection box.
- Bill of materials.
- Gamesa may expressly request a 3D model in iges or step format.
- Declaration of Conformity European directives for CE marking of the product.
- Compliance Certificate in case UL or CSA Marking.

7.39. A12 box

PDM part and drawing: GP491640.

7.39.1. Use

This auxiliary box is designed to install two transformers 690/230Vac with the aim of conditioning the input voltage of the new grid analyzer GP530291 (230Vac input voltage) that replace the discontinued grid analyzer from the supplier ABB, GP007671 (690Vac input voltage).

The applicability is all the wind turbines G8X with ABB V02/04 power converter, according to the TD013924.

7.39.2. Type

Material: Metallic.

7.39.3. Cable entrances

It will have 3 cable entrances, set according to the diagram.

7.39.4. Fastening of the box

The box should have four through holes that are 5mm in diameter, that allow to assembly four magnets, one per hole. The magnets will be supplied with the box.

7.39.5. Other components

The box must include the necessary hardware; so that the fixing system does not emerge too much by the rear side and that it has no mechanical risk to people.

© Siemens Gamesa Renewable Energy S.A., 2023. All rights reserved.

The following components will be installed inside the box: 2xVoltage transformers 690/230Vac with Siemens-Gamesa code GP474911.

8. Metal tray

8.1. Use

Routing of the cables.

8.2. Type

Plate perforated with holes.

The dimensions of the trays will be in accordance with the drawings defined by the Siemens-Gamesa engineering department and the thickness will be between 1 – 1.5mm.

In case the drawing indicated two separate conduits for one tray, spacers will be installed. The separators will be from the same manufacturer as the one for the trays.

In addition, the material and the treatment of the spacers will also be identical to the tray ones.

8.3. Material

Steel plate galvanized using the Sendzimir (Z275) procedure in accordance with regulations ASTM A525 or ASTM A653:2009A and EN 10327. The treatment in an accordance with EN ISO 1461 is also acceptable.

All of the ends will be protected from damaging the cable.

9. Connectors

9.1. DIN 43650 connectors

Connection used with special hydraulic sensors such as, pressure switches, filter switches, level switches and temperature sensors.

Sensor connector according to DIN EN 175301 803 (DIN43650-A). They must fulfill the following characteristics:

Contact distance:	18mm
Nominal voltage	250Vac/dc
Nominal current	16A
Operating current	10A
Conduct cross section	≥ 0.75 mm²
Contact resistance	≤ 15Mω
Insulation class	>100MΩ
Cable Gland	PG9, PG11 (Ø:6-8mm)

© Siemens Gamesa Renewable Energy S.A., 2023. All rights reserved.

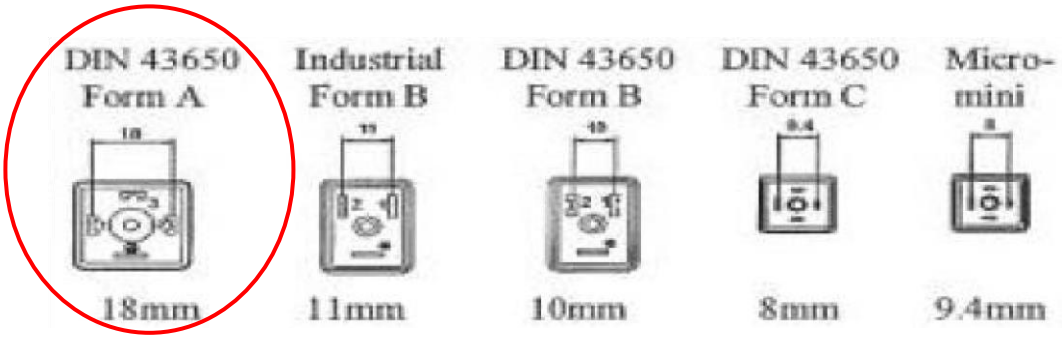

In some sensor (hydraulic group oil loss) the connector will require a resistor, the 1K8Ω resistor of 1/2W in rated wattage and resistance tolerance smaller than ±10%.

9.1.1. Electrovalve connector

Connector according to DIN EN 175301 803 (DIN43650-A 2pins+PE). Into the connector a suppression diode 1N4007 must be assembly in parallel to the load. The diode allows voltage and current to flow in only one direction.

Other filters are not allowed according to behavior in a typical electro valve application.

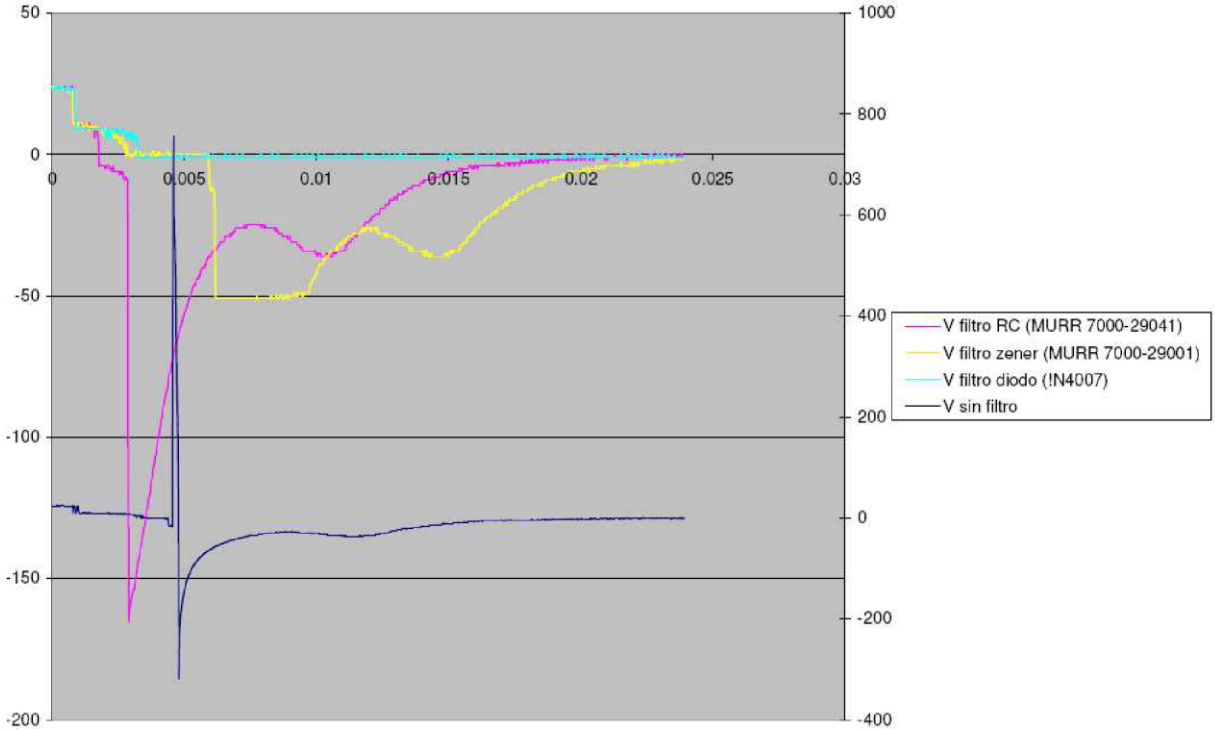

9.1.2. Temperature connector

Connector according to DIN EN 175301 803 (DIN43650-A) with the following number of poles: 4 poles or 2 poles +PE.

9.1.3. PDM description

The DIN EN 175301 803 (DIN43650-A) connectors are described in PDM as follow:

© Siemens Gamesa Renewable Energy S.A., 2023. All rights reserved.

DIN43650	/		-			

CODE TYPE	NUMBER OF POLES	CABLE ENTRANCE	ACCESORIES
A B C	2P+PE (ground) 3P 4P Etc.	PG9 PG11 M12 M16	D → Diode 1N4007 R → Resistor (resistive value power + accuracy)

Examples:

DIN43650/A – 4P PG11 → It does not include any accessory. DIN43650/A – 4P PG11 D → It includes a 1N4007 diode.

DIN43650/A – 4P PG11 R (1K8 + 1/2W + 5%) → It includes a resistor with the following characteristics: Resistive value = 1K8; Power = 1/2W; Accuracy = 5%.

9.2. Data transmission

9.2.1. DSUB connector

D-SUB connector, 9-pos. female or male connector, pin assignment 1, 2, 3, 4, 5, 6, 7, 8, 9 to screw connection terminal block.

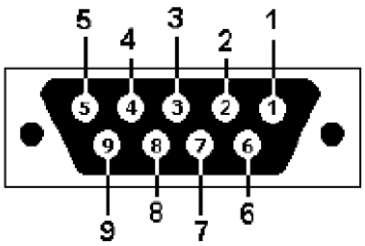

It must fulfil the following characteristics.

Connector type	Phoenix Contact 2761499 / 2761509 or similar DB9
Number of poles	9
Housing material	Metal-plated
Rated voltage	50V
Ampacity	100mA
Internal Pin size conductor connection	≤ 1mm² (min 0.34mm²)
Cable range diameter	4 – 10mm

© Siemens Gamesa Renewable Energy S.A., 2023. All rights reserved.

9.2.2. RJ45 connector

RJ45 male connector is used for 10Base-T and 100Base-TX Ethernet connections.

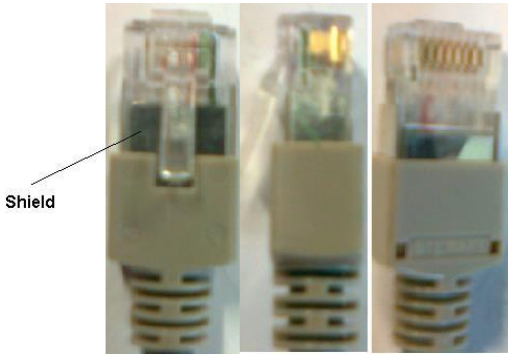

It must fulfil the following characteristics.

Connector type	Phoenix Contact 1652716 IP20 or similar.
Number of poles	8
Housing material	Plastic + shield
Transmission characteristics	CAT 5e (EIA/TIA568B)
Rated voltage	50V
Ampacity	100mA
Internal Pin size conductor connection	≥ 0.22mm²
Cable range diameter	6 – 8mm

PDM reference → GP261499 – RJ45 CONNECTOR -.

9.3. Round connector

9.3.1. Encoder

Round straight female plugs connector M23 with 17 pins used with encoder.

The connector shall include a mechanical auto locking system.

The connector must fulfil the following characteristics:

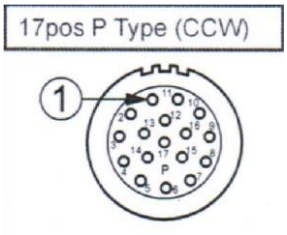

Connector type	M23
Number of poles	17
Rated voltage	125V AC/DC
Resistance contact	≤ 5mΩ
Contacts	Brass Gold-plated
Protection class	IP 67

© Siemens Gamesa Renewable Energy S.A., 2023. All rights reserved.

Internal Pin size conductor connection	≤ 1mm². Conductor 0.34mm²
Cable range diameter	10-14 mm

9.3.2. Proportional valve

Round straight plug connector with 7 pins used with proportional valve.

The connector shall include a mechanical auto locking system.

The connector must fulfil the following characteristics:

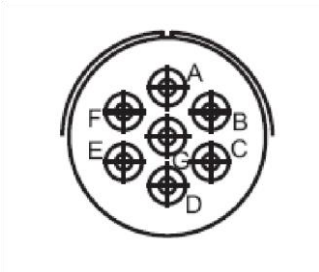

Connector type	Amphenol MS3106A-14S-07S 0208 or similar
Number of poles	7
Ampacity:	13A
Rated voltage	700 Vdc / 500 Vac
Resistance contact	≤ 5mΩ
Cable range diameter	8-10 mm

9.3.3. Inductive and rotor lock sensor

Round connector, Right angle or straight, female version used with inductive and rotor lock sensors according to IEC 61076-2-101.

The connector shall include a mechanical auto locking system.

The connector must fulfil the following characteristics:

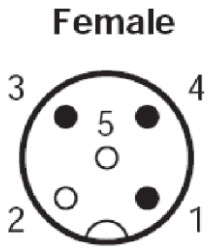

Connector type	M12x1
Number of poles	≥ 3 pins
Ampacity:	4A min
Rated voltage	Max 250V
Resistance contact	≤ 6mΩ
Protection class	IP67

© Siemens Gamesa Renewable Energy S.A., 2023. All rights reserved.

PDM description:

The M12 connectors are described in PDM as follow:

M12			/		-			

CONNECTION TYPE	HOUSING TYPE	CODE TYPE	NUMBER OF POLES	EMC PROTECTION	CABLE ENTRANCE
M – Male F – Female	S – Straight. R – Right angle.	A B D	3P 4P 5P Etc.	EMC – Yes	PG7 PG9 M10 M12

Example: M12 FR/A-5P PG9

9.3.4. Water level sensor

Round straight female connector used with converter water level sensors according to IEC 61076-2-101 and IEC 60947-5-2.

The connector shall include a mechanical auto locking system.

The connector must fulfil the following characteristics:

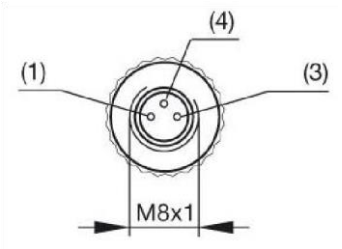

Connector type	ELKA 3008 V or similar (M8)
Number of poles	3
Rated voltage	60V AC/DC
Ampacity:	3A min
Resistance contact	≤ 5mΩ
Protection class	IP 67
Sockets	Conductor 0.14mm² to 0.34mm²
Cable range diameter	4 – 5 mm

PDM reference → P393143 – WATER LEVEL SENSOR -.

© Siemens Gamesa Renewable Energy S.A., 2023. All rights reserved.

9.3.5. Anemometer

Round straight female connector. Metal construction EMC shielding. Connect general shield to the connector according to connection details. Don't connect shields of pairs to connector.

It must fulfil the following characteristics:

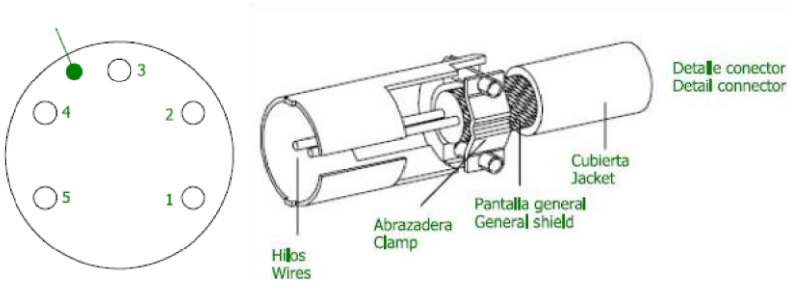

Connector type	Binder Serial 423 or similar
Number of poles	5
Contact plate	Gold
Sockets	≤ 1mm²
Protection class	IP67
Contact resistance	≤ 5mΩ
Insulation resistance	≥ 1010Ω
Cable range diameter	6 – 8mm

9.3.6. Vane

Round straight female connector. Metal construction EMC shielding. Connect general shield to the connector according to connection details. Don't connect shields of pairs to connector.

Depending on the Wind Vane model, it will be used 6 pin or 7 pin connectors.

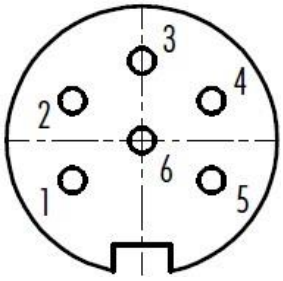

6 pin

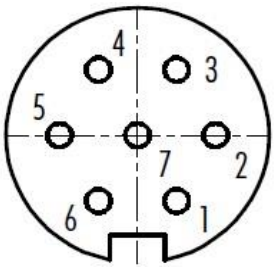

7 pin

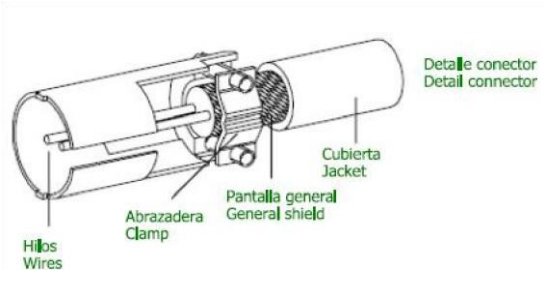

They must fulfil the following characteristics:

Connector type	Binder Serial 423 or similar	Binder Serial 423 or similar
Number of poles	6	7
Contact plate	Gold	Gold
Sockets	≤ 1mm²	≤ 1mm²
Protection class	IP67	IP67
Contact resistance	≤ 5mΩ	≤ 5mΩ
Insulation resistance	≥ 1010Ω	≥ 1010Ω
Cable range diameter	6 – 8mm	6 – 8mm

© Siemens Gamesa Renewable Energy S.A., 2023. All rights reserved.

9.3.7. Ice detector

Round straight plug connector with 7 pins used with ice detector.

The connector shall include a mechanical auto locking system.

The connector must fulfil the following characteristics:

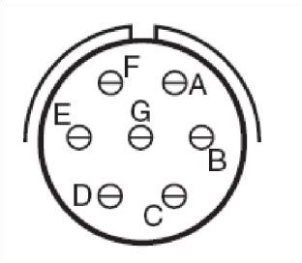

Connector type	Amphenol MS27473T10B99SN or similar
Number of poles	7
Ampacity:	5A
Rated voltage	850 Vdc / 600 Vac
Resistance contact	≤ 5mΩ
Cable range diameter	10 – 12 mm

9.3.8. Sonic and blade pitch position sensor

Round straight female connector. Metal construction EMC shielding.

The connector shall include a mechanical auto locking system.

The connector must fulfil the following characteristics:

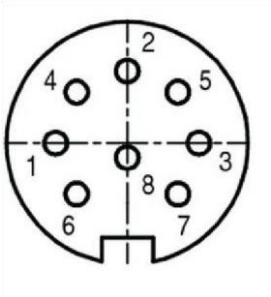

Connector type	Amphenol C 091 D (4x(2x0.22+SH)) or (6x0.34 +SH) Binder Serie 423 [2x0.75+(1x2x0.22)+SH+1x0.22]+SH or similar
Number of poles	8
Contact plate	Silver or Gold
Rated voltage	60V
Ampacity	5A
Sockets	≤ 1mm²
Protection class	IP67
Contact resistance	≤ 5mΩ

© Siemens Gamesa Renewable Energy S.A., 2023. All rights reserved.

Cable range diameter	6 – 8mm

9.4. UPS and desktop computers connectors

9.4.1. Connector IEC 320 C13/C14 coupler

The C13 connector socket and C14 inlet are commonly found on ups, computers, servers, routers, and switches.

These variants of IEC C13 / C14 plugs must have the capacity to assemble a three-wire cable with a diameter of 1.5mm2.

The connector must fulfil the following characteristics:

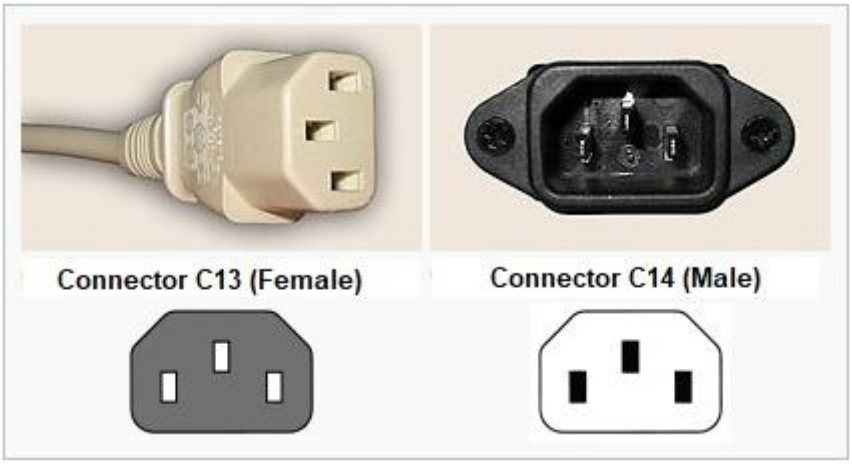

IEC Connector type	C13 / C14
Gender	Female / Male
Body Orientation	Straight
Rated voltage	250V
Current Rating	10A
Body Material	Plastic / (Nylon-6)
Protection class	IP64
Contact resistance	10mΩ max
Terminals Material	Copper Alloy, Tin Plated
Operation Environment Specifications	0°C to 70°C
Compliance/Certifications	CE, UL (C, US), VDE

10. Marks and certifications

The components design requirements are referred mainly to European directives and IEC standards. These requirements form the baseline, or minimum requirements for cabinet's design.

The suppliers of the components described in this specification should be marked with the CE or UL (CSA is acceptable as equivalent to UL).

As an exception to the above, cable trays must have CE and UL marking (CSA is acceptable as equivalent to UL).

© Siemens Gamesa Renewable Energy S.A., 2023. All rights reserved.

11. Major changes compared to last revision

Rev	Date (dd/mm/yy)	Author	Description
0	04/09/02	RLG	Initial version
1	14/03/05	IEP	Replacing A40 box
2	28/01/08	WARNING	Updating of point 3, in order to adapt it to the current product
3	15/12/08	MTI	Boxes: The reference to the UK terminal is eliminated and the use of the UT, ST, Z, and W terminal blocks is permitted. Trays: UNE 36130 is eliminated by EN10327. The galvanizing procedure is eliminated, and the temperature, H and corrosion requirements are added. The list of trays is updated.
4	17/08/09	JARMENDARIZ	Cable identification labels. It is specified that these must be designed to resist the conditions into which they are going to be installed. Boxes: electrical hazard label is added to the covers of the terminal boxes
		JDELBARRIO	Section 6 Cable Trays: Is updated in accordance with R2 of this document. Regulation UNE-EN 36130 (annulled) is eliminated. Regulation EN 10327 is added (currently in force). Tray GP039788 is added.
5	10/09/09	JARMENDARIZ	The definition of the cable identification labels is modified. The definition of the cable pointers is modified. Box A6C, GP008641 is added. Commercial references are removed from the definition of the terminal blocks and the reference to regulation IEC 60947-7-1 is added.
6	24/05/10	ASH	A chapter on heat shrink tubes is added. The chapter on boxes is modified in order to update the specification in accordance with the materials provided by the suppliers. The chapter on cable trays is modified, eliminating the references to the parts of the PDM and the dimensions of the trays. The A40 box is removed because it does not belong to the nacelle and it is outside of the scope of this specification. The nuts and bolts that should be supplied with the box are added. Box A20 is added. Point 6.2 is updated. Point 9 is added, vibrations profile.
7	15/09/10	JARMEN DARIZ	Section 8 modified. Marking and certification. Section 9 erased. Vibration profile. Section 6.15 modified. Documentation.
8	28/10/11	XUBIETO	The title and the scope of the document change to cover G9x A32 box exclusive for G97 turbine included
9	26/06/12	MTP	Rejected
10	17/09/12	MTP	Point 6. Cable glands and nuts requirements for power cables added
11	18/03/13	ASH	Point 6.3: It is added an explanatory note for PG36 cable gland. Point 7. It is added four new connection boxes: A6, A9, A32 and A82 for G114 WTG.

© Siemens Gamesa Renewable Energy S.A., 2023. All rights reserved.

			It is added the insulated voltage for earth terminal blocks. It is indicated the nominal voltage 690Vac for A14 and A82 boxes. Point 9: It is added the connector's characteristics.
12	13/05/13	ASH	Point 7: It is added a new connection boxes: A38 for G114 WTG. It is added in A6 and A82 box that the supplier includes the necessary hardware. The point 7.10.5 is modified adding clarification about box fixing. The point 7.25.5 is modified. The point 7.17.6 is removed. Point 9: It is added the characteristics for DB9 connector. Point 9.1: It is added the PDM description and temperature connector.
13	21/10/14	ASH	Point 4.3: It is updated with new terminals. Point 4.5: New point to include the maximum wide palm for power terminal. Point 5: Point is completely updated. Point 6: Point is completely updated. Point 7.3: Point is updated.
14	06/03/15	RUGIL	Point 7: Box identification label and electrical shock risk symbol, including location and dimensions, have been detailed as a general requirement for all boxes.
15	14/05/15	ASH	Point 7: A21 is added. Point 8: The metal tray thickness is included. Point 4.3: It is added a note showing a minimum thickness. Point 9.2: It is modified and added the RJ45 connector.
16	25/06/15	JLDECARLOS	Point 7: A6 without card is added
17	23/07/15	ANSANCHO	Sections: 7.7 (box A8), 7.10 (box A14) and 7.18 (box A35), added requirement about the length of the screws.
18	11/12/15	AMONTESINOS	Section 7.4 (box A6) Electrical shock hazard label on the box enclosure and an end terminal block for separate terminals are added. Section 7.13 (box A20) An earth terminal block is added
19	21/03/16	PSPINA	Section 7.14: It is added a model of box A20 for G114 but in the case of the auxiliary transformer 400Vac is installed.
20	20/12/16	MABLANCO	Section 7.10: It is added a new A9 box for G114. This box will be installed whenever the ambient temperature has an independent cable from this box to the TOP control cabinet
21	27/06/17	BELGONZALEZ	Section 7.6 (Round connectors vane): It is added the 7-pin connector for the vane. Also; it is corrected the figure of the 6-pin connector as it should be represented the female connector.
22	17/07/17	PSPINA	Point 7: It is added a model of box A9, A38 and A32 in the case of independent cable for the temperature signal from these boxes to the TOP control cabinet.
23	24/10/17	JRIPALDA	information. Applicable to G97 and G114. Point 7.5: a new A6 box is included for the connection of an additional smoke sensor in the power transformer room.
24	27/02/2018	XUBIETO	Point 7: New boxes. - A38 G122 MY19. - A32 G122 MY19. Point 5.5: New requires for conductive copper tape.

© Siemens Gamesa Renewable Energy S.A., 2023. All rights reserved.

25	02/08/2018	BELGONZALEZ / EGALVEZ	Point 4: Added subsection for bimetallic connectors and aluminum compression terminal lugs used with aluminum cables. Point 7.7: A6C BOX new GP - Signal conversion card removed
26	27/02/2019	LSMORENO	Point 7.4: new BOX A6 is included. Point 7.8: new BOX A6A is included. Point 7.9: A6C BOX is included again. This was in Rev. 24 but not in Rev 25. Point 7.10: A6C Box changes the name (A6C Box without card) and the number of entrances.
26.1	27/02/2019	SLROTONDO	Point 7.15 Updated. GP399581 was substituted by GP468309
27	04/06/2019	JHERMOSO	Document format has been changed. Included section 7.7 A6 Box without card + rain/precipitation sensor
28	23/10/2019	JHERMOSO	Section 7.2: Included gland clamping requirement; cable diameter range in the middle of the gland clamping range.
29	12/11/2019	JHERMOSO	Included section 7.35 JB314A SSAS (Smoke Audible System)
30	28/11/2019	JRIPALDA	Section 7.8: New A6 box included (GP508043 – terminal 20 doubled new smoke sensor model)
31	31/01/2020	JHERMOSO	Section 7.14: A9 box for G8/G9X C393228 is removed as an electrostatic improvement for G9X wind turbines. Section 7.26: Included a new G9X A32 box GP514984. One earth terminal block is replaced for a conventional terminal block using G9X A32 box GP117937 as reference. Electrostatic improvement.
32	03/07/2020	LSMORENO	Point 9.3.4. Water level sensor P393143 PDM reference is included
33	30/10/2020	AMONTESINOS	Point **Error! Reference source not found.**: Changed A6 box GP317534 to GP551279 Point **Error! Reference source not found.**: Changed A6 box GP508043 to GP551280
34	24/11/20	MABLANCO	Point 7.38: Added JB861 box Previous point 7.38 moved to 7.39
35	02/10/23	JUFERNANDEZ	Point 9.4: Added Connector IEC
36	17/08/23	JHERMOSO	Format of the document is changed. Point 7.39: Included the auxiliary box A12.

© Siemens Gamesa Renewable Energy S.A., 2023. All rights reserved.