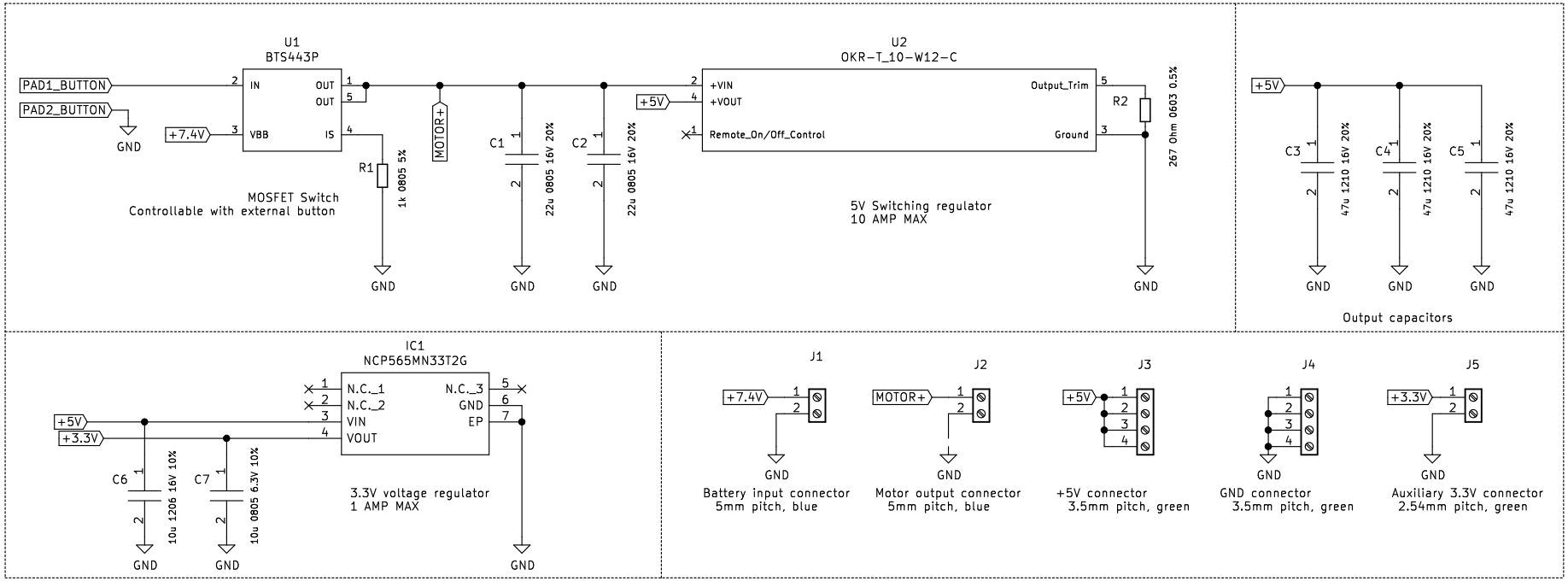

Sheet: /
File: pdboard.sch

Title: BFMC Power distribution board

Size: A4	Date: 2020-11-19	Rev:
KiCad E.D.A. kicad (5.1.6)-1		Id: 1/1