SYLLABUS

EC8651 TRANSMISSION LINES AND RF SYSTEMS

UNIT I TRANSMISSION LINE THEORY

General theory of Transmission lines - the transmission line - general solution - The infinite line - Wavelength, velocity of propagation - Waveform distortion - the distortion-less line - Loading and different methods of loading - Line not terminated in Z0 - Reflection coefficient - calculation of current, voltage, power delivered and efficiency of transmission - Input and transfer impedance - Open and short circuited lines - reflection factor and reflection loss.

UNIT IIHIGH FREQUENCY TRANSMISSION LINES

Transmission line equations at radio frequencies - Line of Zero dissipation - Voltage and current on the dissipation-less line, Standing Waves, Nodes, Standing Wave Ratio - Input impedance of the dissipation-less line - Open and short circuited lines - Power and impedance measurement on lines - Reflection losses - Measurement of VSWR and wavelength.

UNIT III IMPEDANCE MATCHING IN HIGH FREQUENCY LINES

Impedance matching: Quarter wave transformer - Impedance matching by stubs - Single stub and double stub matching - Smith chart - Solutions of problems using Smith chart - Single and double stub matching using Smith chart.

UNIT IV WAVEGUIDE

General Wave behavior along uniform guiding structures – Transverse Electromagnetic Waves, Transverse Magnetic Waves, Transverse Electric Waves – TM and TE Waves between parallel plates. Field Equations in rectangular waveguides, TM and TE waves in rectangular waveguides, Bessel Functions, TM and TE waves in Circular waveguides.

UNIT V RF SYSTEM DESIGN CONCEPTS

Active RF components: Semiconductor basics in RF, bipolar junction transistors, RF field effect transistors, High electron mobility transistors Basic concepts of RF design, Mixers, Low noise amplifiers, voltage control oscillators, Power amplifiers, transducer power gain and stability considerations.

Tamilnadu College Of Engineering

CONTENTS

UNIT - I TRANSMISSION LINE THEORY ..... 1.1 - 1.81

1.1 Introduction 1.1

1.2 General Theory of Transmission Lines 1.1

1.2.1 Types of Transmission Lines 1.1

1.2.2 Primary Constants 1.2

1.2.3 Secondary Constants 1.3

1.2.4 Determination of Characteristic Impedance 1.3

1.2.5 Determination of Propagation Constant 1.5

1.2.6 Neper and Decibel 1.6

1.2.7 Applications of Transmission Lines 1.7

1.3 The Transmission Line-General Solution 1.8

1.4 The Infinite Line (Physical Significance of the Equation) .. 1.14

1.5 Wave length and Velocity of Propagation 1.17

1.6 Wave form Distortion 1.17

1.7 The Distortion less Line 1.18

1.8 Loading and Different Methods of Loading 1.20

1.8.1 The Telephone Cable 1.21

1.8.2 Inductance Loading of Telephone Cables 1.22

1.8.3 Campbell's Equation 1.24

1.9 Reflection on a Line not Terminated in Z. 1.25

1.10 Reflection Coefficient 1.27

1.11 Calculation of Current, Voltage, Power Delivered and Efficiency of Transmission 1.27

1.12 Input and Transfer Impedance 1.42

1.13 Open and Short Circuited Lines 1.43

1.14 Reflection Factor 1.44

1.15 Reflection Loss 1.46

Tamilnadu College Of Engineering

Solved Problems 1.46
Two Mark Questions and Answers 1.66
Review Questions 1.77
Formulas 1.78

UNIT - II HIGH FREQUENCY TRANSMISSION LINES .. 2.1 - 2.66

2.1 Introduction 2.1
2.2 Transmission Lines at Radio Frequencies 2.1
2.2.1 Parameters of Open Wire Line at High Frequencies 2.1
2.2.2 Parameters of the Coaxial Line at High Frequencies 2.3
2.3 Line of Zero Dissipation 2.5
2.4 Voltage and Current on the Dissipation less Line 2.6
2.5 Standing Waves and Nodes 2.10
2.6 Standing Wave Ratio 2.11
2.7 Input Impedance of the Dissipationless Line 2.12
2.8 Open and Short Circuited Line 2.15
2.9 Power and Impedance Measurement on Lines 2.17
2.10 Reflection Losses 2.20
2.11 Measurement of VSWR and Wavelength 2.21
Solved Problems 2.23
Two Mark Questions and Answers 2.57
Review Questions 2.64
Formulas 2.65

UNIT III IMPEDANCE MATCHING IN HIGH FREQUENCY LINES ..... 3.1 - 3.84

3.1 Introduction 3.1
3.2 Impedance Matching 3.1
3.3 Quarter Wave Transformer 3.2

Tamilnadu College Of Engineering

3.4 Impedance Matching by Stubs 3.4
3.5 Single Stub Matching 3.5
3.6 Double Stub Matching 3.8
3.7 Smith Chart 3.11
3.7.1 Properties of Smith Chart 3.14
3.7.2 Applications of Smith Chart 3.15
3.8 Solution of Problems Using Smith Chart 3.17
3.9 Single and Double Stub Matching Using Smith Chart ... 3.42
3.9.1 Design of Single Stub Matching 3.42
3.9.2 Design of Double Stub Matching 3.43
Solved Problems 3.55
Two Mark Questions and Answers 3.75
Review Questions 3.83
Formulas 3.84
UNIT - IV WAVEGUIDE 4.1-4.102
4.1 Introduction 4.1
4.2 General Wave Behaviour Along Uniform Guiding Structures 4.1
4.2.1 Transverse Electromagnetic Waves (TEM) 4.7
4.2.2 Transverse Magnetic Waves (TM) 4.8
4.2.3 Transverse Electric Waves (TE) 4.8
4.3 TM waves between paralleL plates 4.11
4.4 Te waves between parallel plates 4.15
4.5 Rectangular Waveguide. 4.18
4.5.1 TM waves in Rectangular Waveguide 4.24
4.5.2 TE Waves in Rectangular Waveguide. 4.28
4.5.3 Characteristics of TE and TM Waves in Rectangular Waveguide. 4.33
4.6 Bessel's differential equation and bessel function 4.37

P. Q How to behave TEM waves on parallel plates?

Tamilnadu College Of Engineering

4.7 Circular (or) cylindrical waveguide 4.40
4.7.1 TM (Transverse Magnetic) Waves in Circular Wave Guide 4.46
4.7.2 TE (Transverse Electric Waves) in Circular Waveguide 4.49
4.7.3 Characteristics of TE and TM Waves 4.51
4.8 Resonant cavities 4.53
4.8.1 Rectangular Cavity Resonators 4.53
4.8.1.1 TE_{mnp} Mode 4.54
4.8.1.2 TM_{mnp} Mode 4.55
4.8.2 Circular Cavity Resonators 4.58
4.8.2.1 TE_{mnp} Mode 4.58
4.8.2.2 TM_{mnp} Mode 4.60
Solved Problems 4.63
Two Mark Questions and Answers 4.96
Review Questions 4.100
Formulas 4.101
UNIT - V RF SYSTEM DESIGN CONCEPTS 5.1–5.42
5.1 Active RF Components: Semiconductor Basics in RF 5.1
5.1.1 Physical Properties of Semiconductors 5.1
5.1.2 The pn-Junction 5.4
5.2 Bipolar Junction Transistors (BJT) 5.8
5.2.1 Graphical Representation of BJT Characteristics 5.9
5.2.2 BJT DC Biasing 5.10
5.2.3 BJT Modes of Operation 5.11
5.3 RF Field Effect Transistors 5.12
5.3.1 Construction 5.12
5.3.2 Functionality 5.13

Tamilnadu College Of Engineering

5.4 High Electron Mobility Transistors 5.17
5.4.1 Construction 5.18
5.4.2 Functionality 5.18
5.5 Basic Concepts of RF Design 5.20
5.5.1 RF Circuit Design Consideration 5.20
5.5.2 High RF and Microwave Circuit Design Consideration 5.21
5.6 Mixer 5.22
5.6.1 Types of Mixers 5.23
5.6.1.1 Up – Converters 5.23
5.6.1.2 Down Converter 5.24
5.6.1.3 Harmonic Mixers 5.24
5.7 Low Noise Amplifiers 5.25
5.8 Voltage Control Oscillators 5.26
5.9 Power Amplifier 5.27
5.10 Amplifier Power Relations 5.27
5.10.1 RF Source 5.28
5.10.2 Transducer Power Gain 5.29
5.10.3 Additional Power Relations 5.31
5.11 Stability Considerations 5.33
5.11.1 Stability Circles 5.33
5.11.2 Unconditional Stability 5.35
5.11.3 Stabilization Methods 5.36
Two Mark Questions and Answers 5.39
Review Questions 5.42
Solved Anna University Question Papers SQ.1-SQ.91

Tamilnadu College Of Engineering

UNIT 1

TRANSMISSION LINE THEORY

1.1 INTRODUCTION

Transmission media can be generally categorized as either unguided or guided. Guided transmission media are those with some form of conductor that provides a conduit in which electromagnetic signals are contained. Unguided transmission media are wireless systems. Unguided signals are emitted then radiated through air or a vacuum or sometimes water.

A transmission line is a metallic conductor system used to transfer electrical energy from one point to another using electrical current flow. Transmission lines can be used to propagate dc or low frequency ac such as 60 cycle electrical power and audio signals or to propagate very high frequencies such as microwave radio frequency signals.

1.2 GENERAL THEORY OF TRANSMISSION LINES

The circuit parameters such as resistance, inductance and capacitance which are lumped at discrete points in the circuit and can be identified definitely are known as **"lumped parameters"**.

The circuit parameters such as resistance, inductance and capacitance which are distributed along the circuits and individual parameters are not possible to known are defined as **"distributed parameters"**. The transmission line is a common example of an electric circuit with distributed parameters.

1.2.1 Types of Transmission Lines

The different types of transmission lines are shown in figure 1.1.

i) **Open wire line :** A common form of transmission line is known as the open wire line because of its construction. The conductors of such lines may be considered parallel and separated by air dielectric.

Tamilnadu College Of Engineering

Examples: Telephone line and Power transmission line.

ii) **Cables :** The cables consist of hundred of conductors which are individually insulated with paper. The conductors of such line may be considered parallel and separated by solid dielectric.

Examples : Underground telephone and Power transmission cables.

iii) **Coaxial line :** In which one conductor is a hollow tube, the second conductor being located inside and coaxial with the tube. The dielectric may be solid or gaseous.

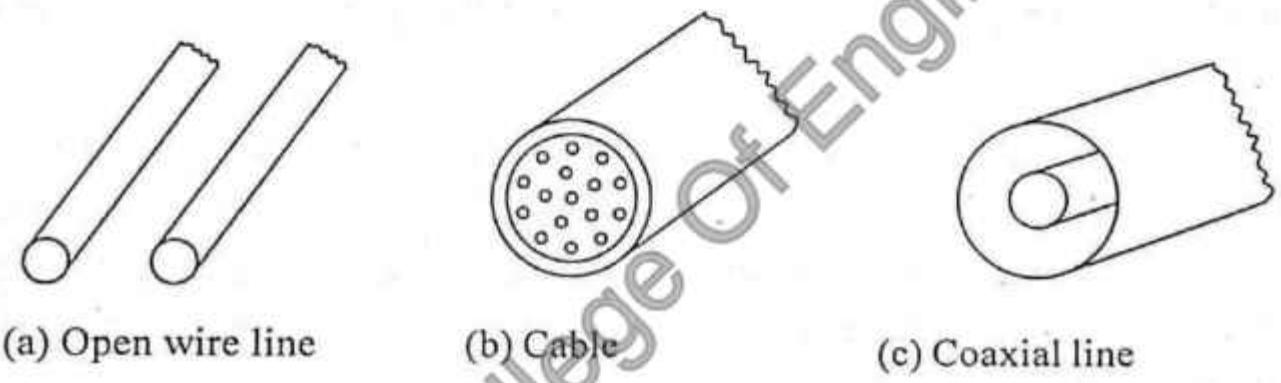

(a) Open wire line (b) Cable (c) Coaxial line

Figure 1.1 Types of the transmission line

1.2.2 Primary Constants

i) **Resistance** $[R(\Omega/km)]$ **:** Which is a property of a conductor and distributed along the length.

ii) **Inductance** $[L(H/km)]$ **:** Since current will be present, the conductor will be surrounded and linked by magnetic flux and its effect in distributed inductance.

iii) **Capacitance** $[C(F/km)]$**:** The conductors are separated by insulating dielectric so that the capacitance will be distributed along the conductor length.

iv) **Conductance** $[G(\mho/km)]$ **:** The dielectric or insulators of the open wire line may not be perfect and a leakage current will flow and leakage conductance will exist between the conductors.

Tamilnadu College Of Engineering

1.2.3 Secondary Constants

i) **Characteristic impedance** $[Z_0(\Omega)]$: Characteristic impedance is an important electrical property of a symmetrical network and it is defined as the input impedance measured at the input terminals when the output terminal is terminated in the same impedance

$$\text{Characteristic impedance} = Z_0 = \sqrt{\frac{Z}{Y}} = \sqrt{\frac{R + j\omega L}{G + j\omega C}}$$

ii) **Propagation constant** $[\gamma]$: Propagation constant is defined as the natural logarithm of the ratio of sending end current to the receiving end current or sending end voltage to the receiving end voltage. It is a complex quantity and it can be represented as,

$$\gamma = ln(I_S/I_R) = \alpha + j\beta = \sqrt{ZY} = \sqrt{(R + j\omega L)(G + j\omega C)}$$

The attenuation constant $[\alpha(\text{nepers/km})]$ indicates the rate at which the signal gets attenuated along the line while the phase constant $[\beta(\text{radians/km})]$ indicates the rate at which phase of the signal gets changed along the line

1.2.4 Determination of Characteristic Impedance

The constants of an incremental length Δx of a line are indicated in figure 1.2. The series constants $Z = R + j\omega L$ are stated in ohms per unit length of line shunt constants $Y = G + j\omega C$ are in mhos per unit length of line.

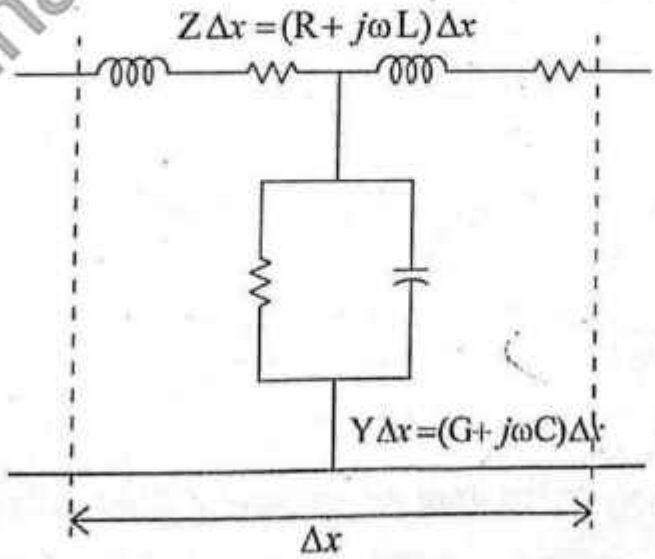

Figure 1.2 The constants for an incremental length of transmission line

Tamilnadu College Of Engineering

Thus one T section, representing an incremental length of the Δx of the line, has a series impedance $Z\Delta x$ ohms and a shunt admittance $Y\Delta x$ mhos. The value of characteristic impedance (Z_0) for a symmetrical network can be easily determined.

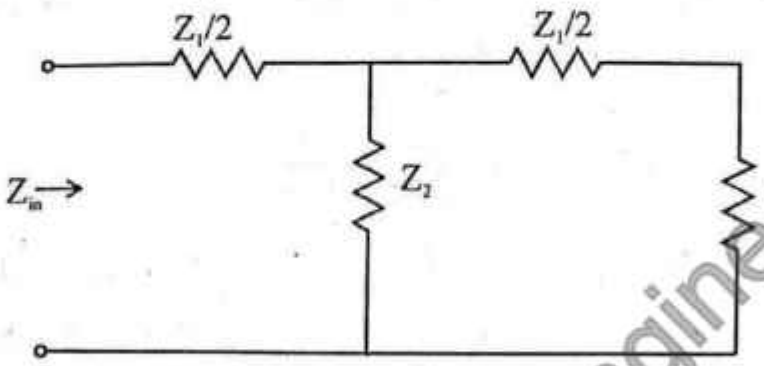

Figure 1.3 Symmetrical T network

For the T network of figure 1.3, the characteristic impedance is

$$Z_0 = \sqrt{Z_1 Z_2 \left(1 + \frac{Z_1}{4 Z_2}\right)}$$

The series impedance of an incremental length line is given by

$$Z_1 = Z\Delta x$$

The shunt admittance of an incremental length line is given by

$$Z_2 = \frac{1}{Y\Delta x}$$

Thus the characteristic impedance becomes

$$Z_0 = \sqrt{\frac{Z\Delta x}{Y\Delta x}\left(1 + \frac{Z\Delta x\, Y\Delta x}{4}\right)}$$

$$Z_0 = \sqrt{\frac{Z}{Y}\left(1 + \frac{ZY\Delta x^2}{4}\right)}$$

Allowing Δx to zero in the limit the value of Z_0 for the line of

Tamilnadu College Of Engineering

distributed constant is obtained as

$$Z_0 = \sqrt{\frac{Z}{Y}}\,\Omega$$

But $Z = R + j\omega L$ and $Y = G + j\omega C$. Then

$$Z_0 = \sqrt{\frac{R + j\omega L}{G + j\,\omega C}}$$

When frequency is small $\omega = 0$. Then

$$Z_0 = \sqrt{\frac{R}{G}}\ \Omega$$

When frequency is large $R = G = 0$. Then

$$Z_0 = \sqrt{\frac{L}{C}}\ \Omega$$

1.2.5 Determination of Propagation Constant

For the symmetrical T network, the propagation constant is

$$e^{\gamma} = e^{\alpha + j\beta} = 1 + \frac{Z_1}{2Z_2} + \sqrt{\frac{Z_1}{Z_2}\left(1 + \frac{Z_1}{4Z_2}\right)} \qquad \text{... (1)}$$

The last term of above equation may be expanded by the binomial theorem as

$$\sqrt{\frac{Z_1}{Z_2}\left(1 + \frac{Z_1}{4Z_2}\right)} = \sqrt{\frac{Z_1}{Z_2}}\left[1 + \frac{1}{2}\left(\frac{Z_1}{4Z_2}\right) - \frac{1}{8}\left(\frac{Z_1}{4Z_2}\right)^2 + \ldots\right]$$

Therefore equation (1) may be written as

$$e^{\gamma} = 1 + \sqrt{\frac{Z_1}{Z_2}} + \frac{1}{2}\left(\sqrt{\frac{Z_1}{Z_2}}\right)^2 + \frac{1}{8}\left(\sqrt{\frac{Z_1}{Z_2}}\right)^3 - \frac{1}{128}\left(\sqrt{\frac{Z_1}{Z_2}}\right)^5 + \ldots$$

In case of incremental length line, $Z_1 = Z\Delta x$, $Z_2 = \dfrac{1}{Y\Delta x}$ and $\gamma = \gamma\Delta x$

Tamilnadu College Of Engineering

$$e^{\gamma\Delta x} = 1 + \sqrt{ZY}\,\Delta x + \frac{1}{2}\left(\sqrt{ZY}\right)^2 \Delta x^2 + \frac{1}{8}\left(\sqrt{ZY}\right)^3 \Delta x^3 - \cdots \quad \ldots (2)$$

If the series expansion is used for an exponential, $e^{\gamma\Delta x}$ can also be stated as

$$e^{\gamma\Delta x} = 1 + \gamma\Delta x + \frac{\gamma^2\Delta x^2}{2!} + \frac{\gamma^3\Delta x^3}{3!} + \ldots \quad \ldots (3)$$

By equating the equations (3) and (2), canceling the unity terms and division by Δx leaves

$$\gamma + \frac{\gamma^2\,\Delta x}{2} + \frac{\gamma^3\,\Delta x^2}{6} + \ldots = \sqrt{ZY} + \frac{\left(\sqrt{ZY}\right)^2 \Delta x}{2} + \frac{\left(\sqrt{ZY}\right)^3 \Delta x^2}{8} + \ldots$$

Allowing Δx to approach zero

$$\gamma = \sqrt{ZY}$$

But $Z = R + j\omega L$ and $Y = G + j\omega C$. Then

$$\gamma = \sqrt{(R + j\omega L)(G + j\omega C)}$$

1.2.6 Neper and Decibel

The units of attenuation are decibel and neper. Attenuation was initially defined in terms of the attenuation produced by a standard reference cable. A circuit was then said to have an attenuation of so many miles of standard cable. The main objection to this unit was that the attenuation of the standard cable changes with the frequency.

The neper is defined as the natural logarithms of ratio of input current of voltage to the output current or voltage.

$$N\ (\text{nepers}) = ln\left|\frac{V_1}{V_2}\right| = ln\left|\frac{I_1}{I_2}\right|$$

The decibel is defined as the common logarithms of ratio of the input power to the output power.

Tamilnadu College Of Engineering

$$db = 10 \log \frac{P_1}{P_2}$$

But $P = VI = \frac{V^2}{R} = I^2R$. Therefore

$$db = 20 \log \frac{V_1}{V_2} = 20 \log \frac{I_1}{I_2}$$

The relation between neper and decibel is given by

$$8.686 \text{ N} = db \text{ (or) } 1 \text{ neper} = 8.686\ db$$

1.2.7 Applications of Transmission Lines

1. They are used to transfer energy from one circuit to another.
2. They can be used as impedance matching devices.
3. They can be used as stubs.
4. They can be used as measuring devices.
5. Coaxial cables are frequently used in laboratories and to connect televisions to antennas.
6. Twisted pairs and coaxial cables are used in computer networks such as Ethernet and Internet.
7. Pair of parallel lines are used in telephony and power transmission.
8. Optical fibers are used to transmit information over long and short distances with negligible attenuation.
9. Planar lines are used to connect transmitters and antennas.
10. They can be used as circuit elements like inductors, capacitors and so on.

Tamilnadu College Of Engineering

1.3 THE TRANSMISSION LINE - GENERAL SOLUTION

A transmission line is a circuit with distributed parameters hence the method of analysing such circuit is different than the method of analysis of a circuit with lumped parameters. It is seen that the current and voltage varies from point to point along the transmission line. The general solution of a transmission line includes the expressions for current and voltage at any point along a line of any length having uniformly distributed constants.

The notations used in this derivation are,

R = Series resistance, ohms per unit length of line includes both wires

L = Series inductance, henrys per unit length of line

C = Capacitance between the conductors, farads per unit length of line

G = Shunt leakage conductance between the conductors, mhos per unit length of line

ωL = Series reactance in ohms per unit length of line

ωC = Shunt susceptance in mhos per unit lengh of line

$Z = R + j\omega L$ = Series impedence in ohms per unit length of line

$Y = G + j\omega C$ = Shunt admittance in mhos per unit length of line

s = Distance to the point of observation, measured from the receiving end

I = Current in the line at any point

E = Voltage between conductors at any point

l = Length of the line

The transmission line of length l can be considered to be made up of infinitesimal T sections. One such section of length ds is shown in the figure 1.3 and carries a current I .

Tamilnadu College Of Engineering

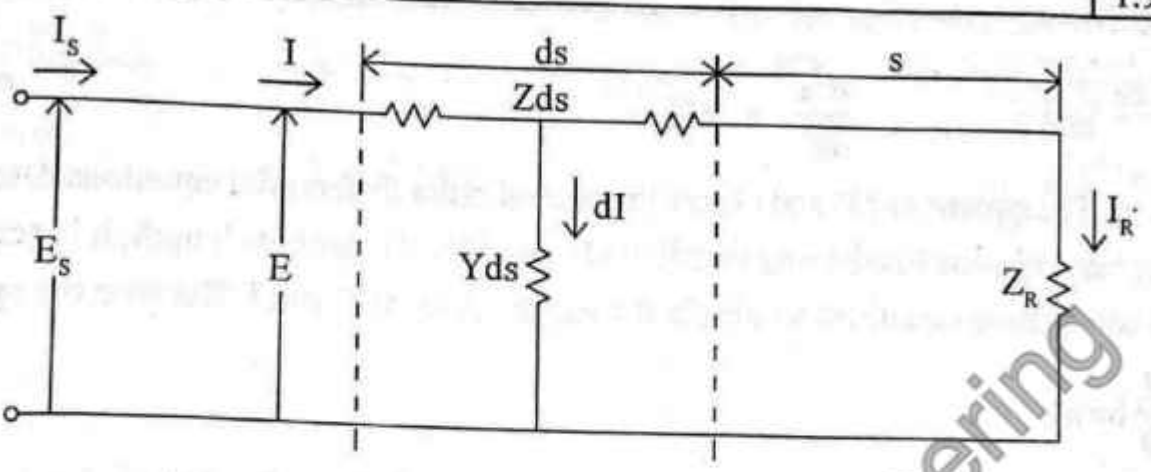

Figure 1.4 Infinitesimal T section of a long line

The point under consideration is at a distance s from the receiving end. The length of section is ds hence its series impedance is Zds and shunt admittance is Yds. The current is I and voltage is E at this section.

The elemental voltage drop in the length ds is,

$$dE = IZ\,ds$$

or $$\frac{dE}{ds} = IZ \qquad \text{... (1)}$$

The leakage current flowing through shunt admittance from one conductor to other conductor is given by,

$$dI = EY\,ds$$

or $$\frac{dI}{ds} = EY \qquad \text{... (2)}$$

Differentiating equations (1) and (2) with respect to s

$$\frac{d^2E}{ds^2} = Z\frac{dI}{ds}$$

and $$\frac{d^2I}{ds^2} = Y\frac{dE}{ds}$$

Then $$\frac{d^2E}{ds^2} = ZEY \qquad \text{... (3)}$$

Tamilnadu College Of Engineering

and $$\frac{d^2 I}{ds^2} = YIZ \qquad \text{... (4)}$$

The equations (3) and (4) are the second order differential equations describing the transmission line having distributed constants all along its length. It is necessary to solve these equations to obtain the expressions of E and I. Replace the operator $\frac{d}{ds}$ by m,

$(m^2 - ZY)E = 0$ and $(m^2 - ZY)\,I = 0$ but $E \neq 0$ and $I \neq 0$

Therefore $$m = \pm\sqrt{ZY} \qquad \text{... (5)}$$

This result indicates two solutions, one for the plus sign and the other for the minus sign before the radical. The solution of the differential equations are

$$E = Ae^{\sqrt{ZY}\,s} + Be^{-\sqrt{ZY}\,s} \qquad \text{... (6)}$$

$$I = Ce^{\sqrt{ZY}\,s} + De^{-\sqrt{ZY}\,s} \qquad \text{... (7)}$$

Where A, B, C and D are arbitrary constants of integration.

Since distance is measured from the receiving end of the line, it is possible to assign conditions,

$$s = 0, I = I_R \;\; and \;\; E = E_R$$

Then equations (6) and (7) become

$$E_R = A + B \qquad \text{... (8)}$$

$$I_R = C + D \qquad \text{... (9)}$$

Same set of boundary condition can be used in the equations obtained by differentiating the equations (6) and (7) with respect to s

$$\frac{dE}{ds} = A\sqrt{ZY}\,e^{\sqrt{ZY}\,s} + B\left(-\sqrt{ZY}\right)e^{-\sqrt{ZY}\,s}$$

and $$\frac{dI}{ds} = C\sqrt{ZY}\;e^{\sqrt{ZY}\,s} + D(-\sqrt{ZY})e^{-\sqrt{ZY}\,s}$$

But $$\frac{dE}{ds} = IZ \text{ and } \frac{dI}{ds} = EY$$

Tamilnadu College Of Engineering

Therefore $$IZ = A\sqrt{ZY}\,e^{\sqrt{ZY}s} - B\sqrt{ZY}\,e^{-\sqrt{ZY}s} \quad \text{... (10)}$$

and $$EY = C\sqrt{ZY}e^{\sqrt{ZY}s} - D\sqrt{ZY}e^{-\sqrt{ZY}s} \quad \text{... (11)}$$

$$I = \frac{A}{Z}\sqrt{ZY}\,e^{\sqrt{ZY}s} - \frac{B}{Z}\sqrt{ZY}e^{-\sqrt{ZY}s}$$

Therefore $$I = A\sqrt{\frac{Y}{Z}}e^{\sqrt{ZY}s} - B\sqrt{\frac{Y}{Z}}\,e^{-\sqrt{ZY}s} \quad \text{... (12)}$$

and $$E = C\sqrt{\frac{Z}{Y}}e^{\sqrt{ZY}s} - D\sqrt{\frac{Z}{Y}}e^{-\sqrt{ZY}s} \quad \text{... (13)}$$

At s = 0, Equations (12) and (13) become

$$I_R = A\sqrt{\frac{Y}{Z}} - B\sqrt{\frac{Y}{Z}} \quad \text{(or)} \quad I_R\sqrt{\frac{Z}{Y}} = A - B \quad \text{... (14)}$$

$$E_R = C\sqrt{\frac{Z}{Y}} - D\sqrt{\frac{Z}{Y}} \quad \text{(or)} \quad E_R\sqrt{\frac{Y}{Z}} = C - D \quad \text{... (15)}$$

The equations (8), (9),(14) and (15) are to be solved simultaneously to ontain the values of the constants A, B, C and D by using the results,

$$Z_0 = \sqrt{\frac{Z}{Y}} \text{ and } E_R = I_R Z_R$$

By adding equations (8) and (14)

$$E_R + I_R\sqrt{\frac{Z}{Y}} = A + B + A - B$$

$$2A = E_R + I_R\sqrt{\frac{Z}{Y}}$$

$$A = \frac{E_R}{2} + \frac{E_R}{2Z_R}Z_0$$

$$A = \frac{E_R}{2}\left(1 + \frac{Z_0}{Z_R}\right)$$

Similarly subtracting equation (8) by (14)

$$E_R - I_R\sqrt{\frac{Z}{Y}} = 2B$$

Tamilnadu College Of Engineering

$$B = \frac{E_R}{2} - \frac{E_R}{2Z_R} Z_0$$

$$B = \frac{E_R}{2}\left(1 - \frac{Z_0}{Z_R}\right)$$

By adding equations (9) and (15)

$$I_R + E_R\sqrt{\frac{Y}{Z}} = C+D+C-D$$

$$2C = I_R + E_R\sqrt{\frac{Y}{Z}}$$

$$C = \frac{I_R}{2} + \frac{I_R Z_R}{2}\frac{1}{Z_0}$$

$$C = \frac{I_R}{2}\left(1 + \frac{Z_R}{Z_0}\right)$$

Similarly subtracting equation (9) by (15)

$$I_R - E_R\sqrt{\frac{Y}{Z}} = 2D$$

$$D = \frac{I_R}{2} - \frac{I_R Z_R}{2}\frac{1}{Z_0}$$

$$D = \frac{I_R}{2}\left(1 - \frac{Z_R}{Z_0}\right)$$

Substituting the values of A, B, C and D in equations (6) ans (7) the general solution of the differential equation become,

$$E = \frac{E_R}{2}\left[\left(1 + \frac{Z_0}{Z_R}\right)e^{\sqrt{ZY}s} + \left(1 - \frac{Z_0}{Z_R}\right)e^{-\sqrt{ZY}s}\right] \quad \text{... (16)}$$

$$I = \frac{I_R}{2}\left[\left(1 + \frac{Z_R}{Z_0}\right)e^{\sqrt{ZY}s} + \left(1 - \frac{Z_R}{Z_0}\right)e^{-\sqrt{ZY}s}\right] \quad \text{... (17)}$$

Tamilnadu College Of Engineering

Taking LCM as Z_R and Z_0 from equation (16) and (17) respectively and taking $\frac{(Z_R + Z_0)}{Z_R}$ out from equations (16) and (17). Then

$$E = \frac{E_R(Z_R - Z_0)}{2Z_R}\left[e^{\sqrt{ZY}s} + \left(\frac{Z_R - Z_0}{Z_R + Z_0}\right)e^{-\sqrt{ZY}s}\right] \quad \text{... (18)}$$

$$I = \frac{I_R(Z_R + Z_0)}{2Z_0}\left[e^{\sqrt{ZY}s} - \left(\frac{Z_R - Z_0}{Z_R + Z_0}\right)e^{-\sqrt{ZY}s}\right] \quad \text{... (19)}$$

The equations (18) and (19) is the general solution of a transmission line. Another way of representing the equation is,

$$E = \frac{E_R}{2Z_R}\left[(Z_R + Z_0)e^{\sqrt{ZY}s} + (Z_R - Z_0)e^{-\sqrt{ZY}s}\right]$$

$$E = \frac{E_R}{2Z_R}\left[Z_R e^{\sqrt{ZY}s} + Z_0 e^{\sqrt{ZY}s} + Z_R e^{-\sqrt{ZY}s} - Z_0 e^{-\sqrt{ZY}s}\right]$$

$$E = E_R\left[\frac{e^{\sqrt{ZY}s} + e^{-\sqrt{ZY}s}}{2}\right] + \frac{Z_0 E_R}{Z_R}\left[\frac{e^{\sqrt{ZY}s} - e^{-\sqrt{ZY}s}}{2}\right]$$

But $\frac{E_R}{I_R} = Z_R$ hence $\frac{E_R}{Z_R} = I_R$

Therefore $$E = E_R\left[\frac{e^{\sqrt{ZY}s} + e^{-\sqrt{ZY}s}}{2}\right] + I_R Z_0\left[\frac{e^{\sqrt{ZY}s} - e^{-\sqrt{ZY}s}}{2}\right] \quad \text{... (20)}$$

Similarly $$I = \frac{I_R}{2Z_0}\left[(Z_R + Z_0)e^{\sqrt{ZY}s} - (Z_R - Z_0)e^{-\sqrt{ZY}s}\right]$$

$$I = \frac{I_R}{2Z_0}\left[Z_R e^{\sqrt{ZY}s} + Z_0 e^{\sqrt{ZY}s} - Z_R e^{-\sqrt{ZY}s} + Z_0 e^{-\sqrt{ZY}s}\right]$$

$$I = I_R\left[\frac{e^{\sqrt{ZY}s} + e^{-\sqrt{ZY}s}}{2}\right] + \frac{I_R Z_R}{Z_0}\left[\frac{e^{\sqrt{ZY}s} - e^{-\sqrt{ZY}s}}{2}\right]$$

Tamilnadu College Of Engineering

$$I = I_R\left[\frac{e^{\sqrt{ZY}s}+e^{-\sqrt{ZY}s}}{2}\right]+\frac{E_R}{Z_0}\left[\frac{e^{\sqrt{ZY}s}-e^{-\sqrt{ZY}s}}{2}\right] \quad \text{... (21)}$$

But $\frac{e^{\sqrt{ZY}s}+e^{-\sqrt{ZY}s}}{2} = \cosh\sqrt{ZY}s$ and $\frac{e^{\sqrt{ZY}s}-e^{-\sqrt{ZY}s}}{2}\sinh\sqrt{ZY}s$

Therefore $E = E_R\cosh\sqrt{ZY}s + I_R Z_0 \sinh\sqrt{ZY}s$ ... (22)

$$I = I_R\cosh\sqrt{ZY}s + \frac{E_R}{Z_0}\sinh\sqrt{ZY}s \quad \text{... (23)}$$

But $\gamma = \sqrt{ZY}$

$$E = E_R\cosh\gamma s + I_R Z_0\sinh\gamma s \quad \text{... (24)}$$

$$I = I_R\cosh\gamma s + \frac{E_R}{Z_0}\sinh\gamma s \quad \text{... (25)}$$

The equations (24) and (25) give the value of E and I at any point along the line.

1.4 THE INFINITE LINE (PHYSICAL SIGNIFICANCE OF THE EQUATION)

The equation of voltage and current on the line are

$$E = \frac{E_R(Z_R+Z_0)}{2Z_R}\left[e^{\gamma s}+\left(\frac{Z_R-Z_0}{Z_R+Z_0}\right)e^{-\gamma s}\right]$$

$$I = \frac{I_R(Z_R+Z_0)}{2Z_0}\left[e^{\gamma s}-\left(\frac{Z_R-Z_0}{Z_R+Z_0}\right)e^{-\gamma s}\right]$$

Where $\gamma = \sqrt{ZY}$

At the sending end $s = l$, $E = E_s$ and $I = I_s$. Therefore

$$E_s = \frac{E_R(Z_R+Z_0)}{2Z_R}\left[e^{\gamma l}+\left(\frac{Z_R-Z_0}{Z_R+Z_0}\right)e^{-\gamma l}\right]$$

$$I_s = \frac{I_R(Z_R+Z_0)}{2Z_0}\left[e^{\gamma l}-\left(\frac{Z_R-Z_0}{Z_R+Z_0}\right)e^{-\gamma l}\right]$$

Tamilnadu College Of Engineering

Input impedance of the line of length l is expressed as

$$Z_s = \frac{E_s}{I_s} = \frac{E_R Z_0}{I_R Z_R}\left[\frac{e^{\gamma l} + \left(\frac{Z_R - Z_0}{Z_R + Z_0}\right)e^{-\gamma l}}{e^{\gamma l} - \left(\frac{Z_R - Z_0}{Z_R + Z_0}\right)e^{-\gamma l}}\right]$$

But $\frac{E_R}{I_R} = Z_R$. Then input impedance becomes

$$Z_s = Z_0\left[\frac{e^{\gamma l} + \left(\frac{Z_R - Z_0}{Z_R + Z_0}\right)e^{-\gamma l}}{e^{\gamma l} - \left(\frac{Z_R - Z_0}{Z_R + Z_0}\right)e^{-\gamma l}}\right]$$

When the line is terminated in its characteristic impedance $Z_R = Z_0$

Then $Z_s = Z_0$ ... (1)

Now consider an infinite line with , input impedance becomes

$Z_s = Z_0$ ... (2)

Where $e^{\infty} = 1$ and $e^{-\infty} = 0$

Thus, by comparison of the results in equations (1) and (2) a line of finite length terminated in a load equivalent to its characteristic impedance, appears to the sending end generator as an infinite line

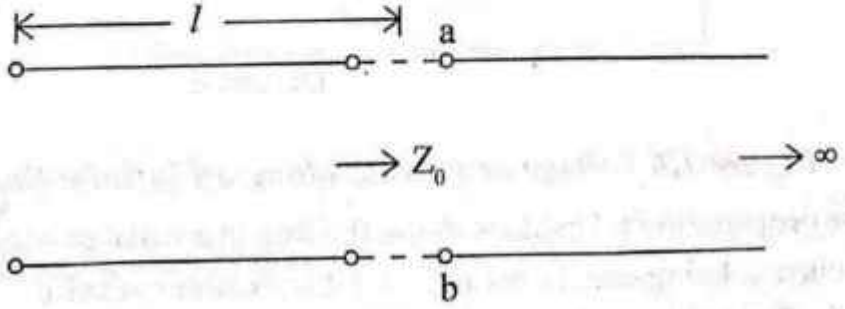

Figure 1.5 An infinite line

Tamilnadu College Of Engineering

The line shown in figure 1.5 have terminals a,b placed at a finite distance l from the sending end. The remainder of the line is still infinite in length so that the input impedance at terminals a,b is Z_0. For a portion of an infinite line or a finite line terminated in its characteristic impedance,

$$Z_R = Z_0$$

Therefore sending end voltage and sending end current becomes

$$E_s = E_R e^{\gamma l}$$

$$I_s = I_R e^{\gamma l}$$

At the receiving end

$$E_R = \frac{E_s}{e^{\gamma l}} = E_s e^{-\gamma l}$$

$$I_R = \frac{I_s}{e^{\gamma l}} = I_s e^{-\gamma l}$$

But $\gamma = \alpha + j\beta$. Then

$$E_R = E_s e^{-\alpha l} e^{-j\beta l}$$

$$I_R = I_s e^{-\alpha l} e^{-j\beta l}$$

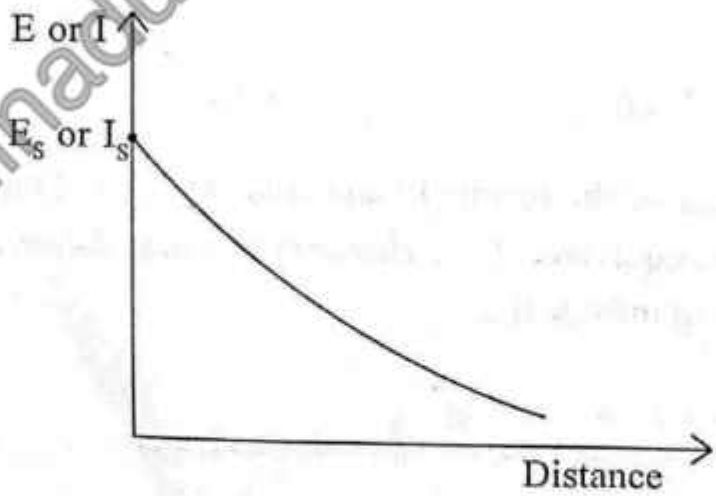

Figure 1.6 Voltage or current along an infinite line

Thus the propagation takesplace along the line in a wave motion, the amplitude of voltage or current being constantly reduced due to attenuation $e^{-\alpha l}$. This is shown in figure 1.5. The phase of the voltage or current constantly changing in counterclockwise direction because of the phase factor $e^{-j\beta l}$.

Tamilnadu College Of Engineering

1.5 WAVELENGTH AND VELOCITY OF PROPAGATION

The distance the wave travels along the line while the phase angle is changing through 2π radians is called a wavelength.

$$\lambda = \frac{2\pi}{\beta} \text{ metre}$$

The velocity of the waves along the line decided by ω and phase constant β is called phase velocity or velocity of propagation.

$$v = \frac{\omega}{\beta} = \lambda f \ m/s$$

1.6 WAVEFORM DISTORTION

The equation for series impedance and shunt admittance of a line are

$$Z = R + j\omega L$$

$$Y = G + j\omega C$$

The complex quantity propagation constant becomes

$$\gamma = \alpha + j\beta = \sqrt{ZY}$$

$$= \sqrt{(R + j\omega L)(G + j\omega C)}$$

$$= \sqrt{RG - \omega^2 LC + j\omega(LG + CR)}$$

Squaring both sides,

$$(\alpha + j\beta)^2 = \left[\sqrt{RG - \omega^2 LC + j\omega(LG + CR)}\right]^2$$

$$\alpha^2 - \beta^2 + j2\alpha\beta = RG - \omega^2 LC + j\omega(LG + CR)$$

Equating the real and imaginary parts,

$$\alpha^2 - \beta^2 = RG - \omega^2 LC \qquad \text{... (1)}$$

Tamilnadu College Of Engineering

$$2\alpha\beta = \omega(LG + CR) \quad \ldots (2)$$

Since $\alpha^2 + \beta^2 = \sqrt{(\alpha^2 - \beta^2)^2 + (2\alpha\beta)^2}$

Therefore $\alpha^2 + \beta^2 = \sqrt{(RG - \omega^2 LC)^2 + \omega^2(LG + CR)^2} \quad \ldots (3)$

Adding the equations (1) and (3),

$$2\alpha^2 = RG - \omega^2 LC + \sqrt{(RG - \omega^2 LC)^2 + \omega^2(LG + CR)^2}$$

$$\alpha = \sqrt{\frac{RG - \omega^2 LC + \sqrt{(RG - \omega^2 LC)^2 + \omega^2(LG + CR)^2}}{2}}$$

In general α is a function of frequency. All frequencies transmitted on a line will not be attenuated equally. Therefore the received waveform and input waveform at the sending end are not identical. This variation is known as **"frequency distortion".** The frequency distortion can be reduced by using equalizers at the line terminals. Subtracting the equation (3) by (1),

$$\beta = \sqrt{\frac{\omega^2 LC - RG + \sqrt{(RG - \omega^2 LC)^2 + \omega^2(LG + CR)^2}}{2}}$$

In general β is also a function of frequency. Since $v = \frac{\omega}{\beta}$. All frequencies transmitted on a line will not be delayed equally. This variation is known as **"delay or phase distortion"**. The phase distortion can be reduced by using coaxial cables.

1.7 THE DISTORTIONLESS LINE

A transmission line is said to be distortionless when the attenuation constant (α) is frequency independent and the phase constant (β) is linearly dependent on the frequency. This can be achived by the condition,

$$(RG - \omega^2 LC)^2 + \omega^2(LG + CR)^2 = (RG + \omega^2 LC)^2 \quad \ldots (1)$$

Expanding the terms,

$$R^2G^2 - 2\omega^2 LCRG + \omega^4 L^2C^2 + \omega^2 L^2G^2 + 2\omega^2 LCRG + \omega^2 C^2R^2$$
$$= R^2G^2 + \omega^4 L^2C^2 + 2\omega^2 LCRG$$

Tamilnadu College Of Engineering

This reduces to,

$$\omega^2L^2G^2 - 2\omega^2LCRG + \omega^2C^2R^2 = 0$$

$$\omega^2(L^2G^2 - 2LCRG + C^2R^2) = 0$$

$$(LG - CR)^2 = 0$$

Therefore $$LG = CR$$

or $$\frac{L}{C} = \frac{R}{G}$$

This is a condition for distortionless line.

The equation of attenuation constant and phase constant on the line are

$$\alpha = \sqrt{\frac{RG - \omega^2LC + \sqrt{(RG - \omega^2LC)^2 + \omega^2(LG + CR)^2}}{2}} \quad \text{... (2)}$$

$$\beta = \sqrt{\frac{\omega^2LC - RG + \sqrt{(RG - \omega^2LC)^2 + \omega^2(LG + CR)^2}}{2}} \quad \text{... (3)}$$

Applying the condition (1) in the equations (2) and (3)

$$\alpha = \sqrt{\frac{RG - \omega^2LC + \sqrt{(RG + \omega^2LC)^2}}{2}}$$

$$\alpha = \sqrt{\frac{RG - \omega^2LC + RG + \omega^2LC}{2}}$$

$$\alpha = \sqrt{RG}$$

$$\beta = \sqrt{\frac{\omega^2LC - RG + \sqrt{(RG + \omega^2LC)^2}}{2}}$$

$$\beta = \sqrt{\frac{\omega^2LC - RG + RG + \omega^2LC}{2}}$$

$$\beta = \omega\sqrt{LC}$$

The velocity of propagation is, $v = \frac{\omega}{\beta} = \frac{1}{\sqrt{LC}}$

Tamilnadu College Of Engineering

1.8 LOADING AND DIFFERENT METHODS OF LOADING

The necessary condition for distortionless line is

$$LG = CR$$

or

$$\frac{L}{C} = \frac{R}{G}$$

This indicates the ratio $\frac{L}{C}$ should be high. It can be achieved by loading. This is shown in figure 1.7.

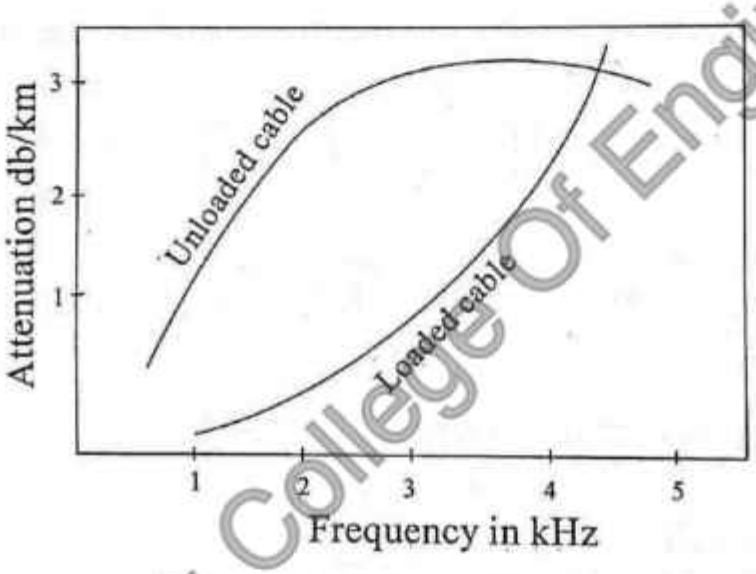

Figure 1.7 Effect of loading on the cable

Introduction of induction in series with the line is called loading and such lines are called loaded line. The three methods of loading are

i) Continuous loading

ii) Patch loading

iii) Lumped loading

i) **Continuous loading :** Here loading is done by winding a type of iron or magnetic material around the conductor. This method can give an increase in inductance upto 65mH/km but is quite expensive due to laborious construction. The continuous loaded cable have the advantage over lumped loaded cable that increase uniformly with increase in frequency. There is no cut off frequency. This is shown in figure 1.8.

Tamilnadu College Of Engineering

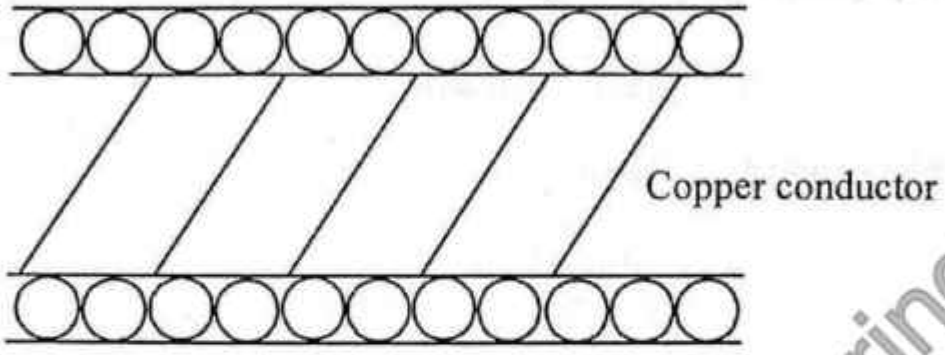

Figure 1.8 Continuous loading

ii) **Patch loading :** This type of loading uses section of continuously loaded cable separated by section of unloaded cable.

iii) **Lumped loading :** Here loading is introduced at uniform intervals. Lumped loading is preferred for open wire lines and cables for improvement in transmission. The core of the coil is in shape and made of permanent alloy. This type of core produces coils of high inductance, having small dimensions with low eddy current losses and negligible external field. This is shown in figure 1.9.

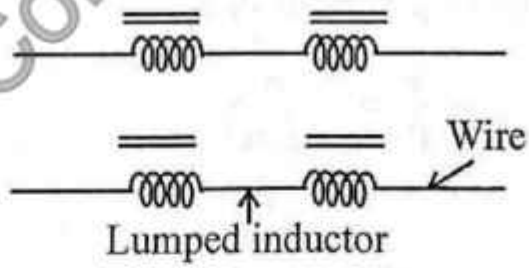

Figure 1.9 Lumped inductor

Tamilnadu College Of Engineering

1.8.1 The Telephone Cable

The ordinary telephone cable is an underground cable which consists of wires insulated with paper and twisted in pair. The inductance L and conductance G of cable in the audio frequency range is negligibly small and hence could be neglected.

Therefore $L = G = 0$

Then $Z = R + j\omega L = R$

$$Y = G + j\omega C = j\omega C$$

The propagation constant become

$$\gamma = \sqrt{ZY} = \sqrt{j\omega RC}$$

Multiplying and dividing by 2,

$$\gamma = \sqrt{\frac{2j\omega RC}{2}}$$

$$= \sqrt{2j}\sqrt{\frac{\omega RC}{2}}$$

$$= (1+j)\sqrt{\frac{\omega RC}{2}}$$

$$\gamma = \alpha + j\beta = \sqrt{\frac{\omega RC}{2}} + j\sqrt{\frac{\omega RC}{2}}$$

$$\alpha = \beta = \sqrt{\frac{\omega RC}{2}}$$

Hence the velocity of propagation is,

$$v = \frac{\omega}{\beta} = \frac{\omega}{\sqrt{\frac{\omega RC}{2}}}$$

$$v = \sqrt{\frac{2\omega}{RC}}$$

Tamilnadu College Of Engineering

1.8.2 Inductance Loading of Telephone Cables

The effect of loading of a transmission line upon secondary constants are:

i) Characteristic impedance Z_0 becomes constant and purely resistive.

ii) Attenuation constant α is reduced and become constant over working frequency range.

iii) Phase constant β is increased.

iv) Velocity of propogation ν is reduced and become constant over working frequency range.

The characteristic impedance of a line is

$$Z_0 = \sqrt{\frac{R + j\omega L}{G + j\omega C}} = \sqrt{\frac{\omega L\left(j + \frac{R}{\omega L}\right)}{\omega C\left(j + \frac{G}{\omega C}\right)}}$$

For loaded cable $\omega L >> R$ and $G = 0$. Therefore

$$Z_0 = \sqrt{\frac{L}{C}}$$

The propagation constant of a line is

$$\gamma = \sqrt{(R + j\omega L)(G + j\omega C)} = \sqrt{j\omega L\left(1 + \frac{R}{j\omega L}\right) j\omega C\left(1 + \frac{G}{j\omega C}\right)}$$

$$\gamma = \alpha + j\beta = j\omega\sqrt{LC}\left[\left(1 + \frac{1}{2}\frac{R}{j\omega L} + \cdots\right)\left(1 + \frac{1}{2}\frac{G}{j\omega C} + \cdots\right)\right]$$

$$\alpha + j\beta = j\omega\sqrt{LC} + \frac{R}{2}\sqrt{\frac{C}{L}} + \frac{G}{2}\sqrt{\frac{L}{C}}$$

For loaded cable $\omega L >> R$ and $G = 0$. Therefore

$$\alpha + j\beta = \frac{R}{2}\sqrt{\frac{C}{L}} + j\omega\sqrt{LC}$$

Equating the real and imaginary parts,

$$\alpha = \frac{R}{2}\sqrt{\frac{C}{L}}$$

$$\beta = \omega\sqrt{LC}$$

Then $\quad \nu = \frac{\omega}{\beta} = \frac{1}{\sqrt{LC}}$

Tamilnadu College Of Engineering

1.8.3 Campbell's Equation

This equation gives the analysis of performance of a loaded line.

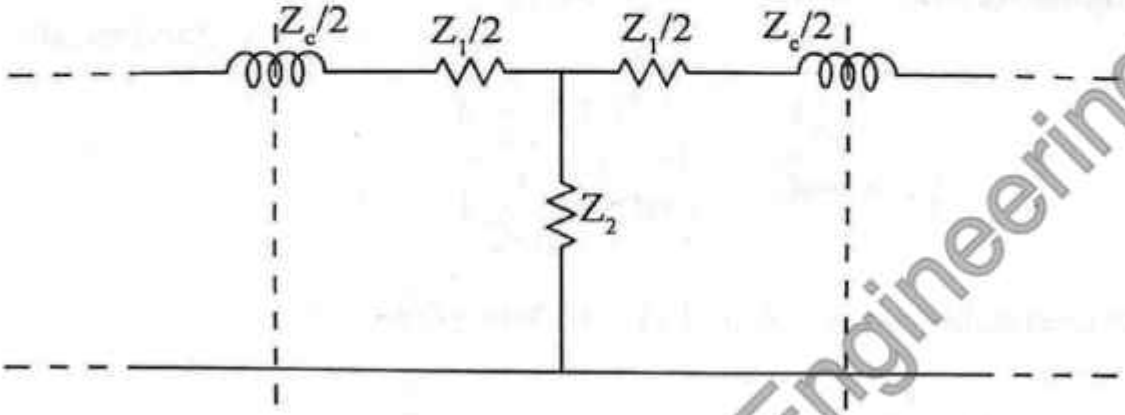

Figure 1.10 Equivalent T section for a loaded line

Consider a symmetrical section from one loading to next loading coil as shown in figure 1.6. where the loading coil impedance is Z_c.

When the loaded section is added

$$\frac{Z_1^1}{2} = \frac{Z_c}{Z_2} + \frac{Z_1}{2}$$

For N spacing $\sinh(N\gamma) = \frac{Z_0}{Z_2}$ and $\cosh(N\gamma) = 1 + \frac{Z_1}{2Z_2}$

Therefore $Z_2 = \frac{Z_0}{\sinh(N\gamma)}$

$$\frac{Z_1}{2} = Z_2[\cosh(N\gamma) - 1] = \frac{Z_0}{\sinh(N\gamma)}[\cosh(N\gamma) - 1]$$

Then $$\frac{Z_1^1}{2} = \frac{Z_c}{2} + \frac{Z_0}{\sinh(N\gamma)}[\cosh(N\gamma) - 1]$$

γ is the propagation constant before loading and it is γ^1 after loading.

$$\cos h(N\gamma^1) = 1 + \frac{Z_1^1}{2Z_2}$$

Tamilnadu College Of Engineering

$$= 1 + \frac{Z_c}{2Z_2} + \frac{\frac{Z_0}{\sinh(N\gamma)}\left[\cosh(N\gamma) - 1\right]}{Z_2}$$

Since $\quad Z_2 = \dfrac{Z_0}{\sinh(N\gamma)}$

$$\cosh(N\gamma^1) = 1 + \frac{Z_c}{2Z_0}\sinh(N\gamma) + \cosh(N\gamma) - 1$$

$$\cosh(N\gamma^1) = \cosh(N\gamma) + \frac{Z_c}{2Z_0}\sinh(N\gamma)$$

This expression is known as Campbell's equation for a loaded line. For a cable, the shunt arm Z_2 is capacitive. The cable capacitance and lumped inductance are similar to the circuit of a low pass filter. The cut off frequency of the low pass filter is given as $f_c = \dfrac{1}{\pi\sqrt{LC}}$.

1.9 REFLECTION ON A LINE NOT TERMINATED IN Z_0

The equation of voltage and current on the line are

$$E = \frac{E_R(Z_R + Z_0)}{2Z_R}\left[e^{\gamma s} + \left(\frac{Z_R - Z_0}{Z_R + Z_0}\right)e^{-\gamma s}\right]$$

$$I = \frac{I_R(Z_R + Z_0)}{2Z_0}\left[e^{\gamma s} - \left(\frac{Z_R - Z_0}{Z_R + Z_0}\right)e^{-\gamma s}\right]$$

If $Z_R \neq Z_0$ the each equation consist of two terms one of which is varies exponentially with + s and the other with -s.

The first term varying with $e^{\gamma s}$ must represents a wave of voltage or current from the sending end towards the receiving end and increasing in amplitude with increased distance from the load. Such a wave of voltage or current is called **'Incident wave'.**

Tamilnadu College Of Engineering

The second term varying with $e^{-\gamma s}$ must represents a wave of voltage or current from receiving end towards the sending end and decreasing in amplitude with increased distance from the load. Such a wave of voltage or current is called **'Reflected wave'.**

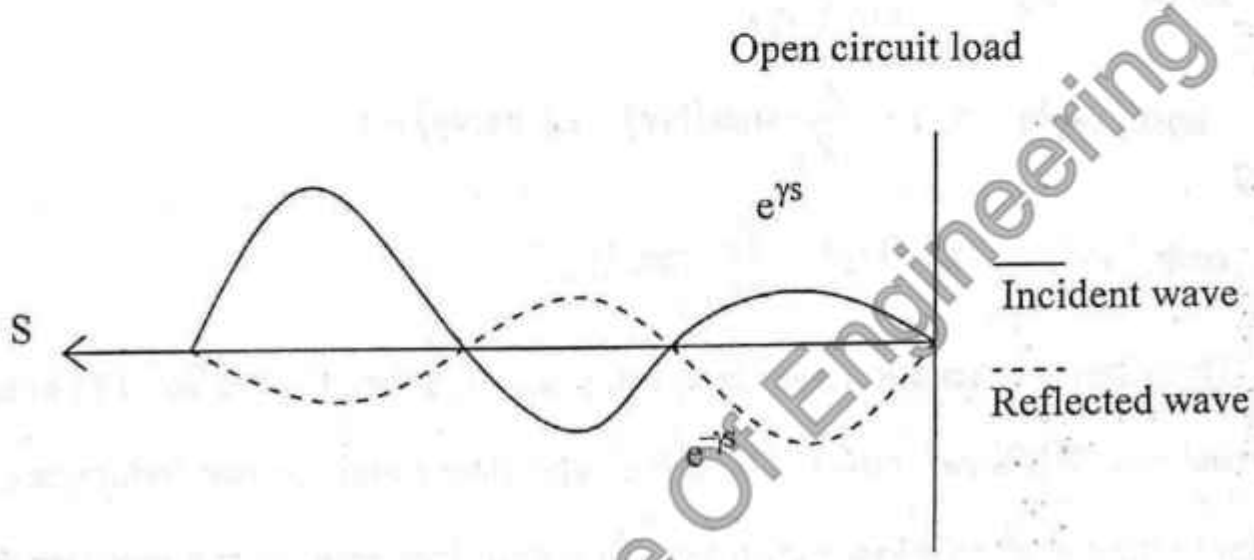

Figure 1.11 Incident and reflected wave for an open circuit load

The total instantaneous voltage at any point on the line is vector sum of voltage or current of the incident and reflected waves. It has been shown in figure 1.7.

In case of an infinite line $s = \infty$ or $Z_R = Z_0$ the second term $e^{-\gamma s}$ becomes zero and the reflected wave is absent. Therefore the waves traveling smoothly down the line and the energy being absorbed in the load without setting up a reflected wave. Such a line is frequently called a **'smooth line'.**

For an ideal line (R = G = 0) terminated in characteristic impedance Z_0, energy conveyed from electric and magnetic fields are equal every where.

If $Z_R \neq Z_0$, at a open circuit the transferred every causes an increase in electric field and magnetic field is forced to zero which induces current wave down the line.

If $Z_R \neq Z_0$, at a short circuit the transferred energy cause an increase in magnetic field and electric field is forced to zero which induces voltage wave down the line.

Tamilnadu College Of Engineering

1.10 REFLECTION COEFFICIENT

The ratio of amplitude of the reflected and incident voltage waves at the receiving end of the line is frequently called the reflection coefficient. It is denoted by K.

$$K = \frac{\textit{Reflected voltage at load}}{\textit{Incident voltage at load}} = \frac{Z_R - Z_0}{Z_R + Z_0}$$

In case of reflected and incident current waves the reflection coefficient is negative

$$-K = \frac{\textit{Reflected current at load}}{\textit{Incident current at load}}$$

1.11 CALCULATION OF CURRENT, VOLTAGE, POWER DELIVERED AND EFFICIENCY OF TRANSMISSION

Example 1

A generator of 1V, 1kHz supplies power to a 100km long line terminated in Z_0 and having the following constants $R = 10.4\ \Omega / km$, $L = 0.00367\ H / km$ $G = 0.8 \times 10^{-6}\ \mho / km$ and $C = 0.00835 \times 10^{-6}$ F/km. Calculate Z_0, attenuation constant α, phase constant β, wavelength λ, velocity of propagation v, received current I_R, voltage E_R and power P_R.

Solution :

$$Z_0 = \sqrt{\frac{R + j\omega L}{G + j\omega C}} \quad \text{where} \quad \omega = 2\pi f = 2\pi \times 10^3\, rad/\sec$$

$$= \sqrt{\frac{10.4 + j(2\pi \times 10^3 \times 0.00367)}{0.8 \times 10^{-6} + j(2\pi \times 10^3 \times 0.00835 \times 10^{-6})}}$$

$$= \sqrt{\frac{10.4 + j23.059}{0.8 \times 10^{-6} + j5.246 \times 10^{-5}}} = \sqrt{\frac{25.29 \angle 65.72^\circ}{5.246 \times 10^{-5} \angle 89.126^\circ}}$$

$$= \sqrt{4.8208 \times 10^5 \angle 65.72^\circ - 89.126^\circ}$$

Tamilnadu College Of Engineering

$$= 694.32\frac{\angle -23.406^\circ}{2}$$

$$= 694.32 \angle -11.703^\circ \Omega$$

$$\gamma = \alpha + j\beta = \sqrt{(R + j\omega L)(G + j\omega C)}$$

$$= \sqrt{25.29 \angle 65.72^\circ \times 5.246 \times 10^{-5} \angle 89.126^\circ}$$

$$= \sqrt{0.001326 \angle 65.72^\circ + 89.126^\circ} = 0.03641 \angle \frac{154.846^\circ}{2}$$

$$= 0.03641 \angle 77.423^\circ = 0.007928 + j0.03553$$

$$\alpha = 0.007928 \; nepers/km$$

$$\beta = 0.03553 \; radians/km$$

$$\lambda = \frac{2\pi}{\beta} = \frac{2\pi}{0.03553} = 176.841 km$$

$$v = \frac{\omega}{\beta} = \frac{2\pi \times 10^3}{0.03553} = 1.95 \times 10^4 km/\sec$$

$$I_R = I_s e^{-\gamma l} = I_s e^{-(\alpha + j\beta)l} = I_s e^{-\alpha l} \angle -\beta l$$

Now $I_s = \frac{E_s}{Z_0}$, where $E_s = 1V$ and $l = 100km$

$$I_s = \frac{1 \angle 0^\circ}{694.32 \angle -11.703^\circ} = 1.4402 \times 10^{-3} \angle 11.703^\circ A$$

Therefore $I_R = 1.4402 \times 10^{-3} \angle 11.703^\circ \times e^{-0.007928 \times 100} \angle -0.03553 \times 100 rad$

$$= 6.518 \times 10^{-4} (\angle 11.703^\circ + \angle -3.553 \, rad)$$

$$= 6.518 \times 10^{-4} \left(\angle 11.703^\circ + \angle -3.553 \times \frac{180}{\pi} \, degree \right)$$

$$= 6.518 \times 10^{-4} \angle 11.703^\circ - 203.57^\circ$$

Tamilnadu College Of Engineering

$$= 6.518\times10^{-4}\angle-191.87^{\circ}\,A$$

$$E_R = I_R Z_0 = 6.518\times10^{-4}\angle-191.87^{\circ}\times694.32\angle-11.703^{\circ}$$

$$= 0.4525\angle-203.57^{\circ}\,V$$

$$P_R = E_R I_R \cos\theta$$

$$\theta = \text{Angle between } E_R \text{ and } I_R = 203^{\circ}.57^{\circ} - 191.87^{\circ} = 11.703^{\circ}$$

$$P_R = 6.518\times10^{-4}\times0.4525\times\cos(11.703^{\circ})$$

$$= 288\times10^{-6}\ \text{Watts}$$

Example 2

A generator of 1V, 1kHz supplies power to a 100km open wire line terminated in 200Ω resistance. The line parameters are R = 10Ω/km, L = 3.8mH/km, G = 1×10^{-6} ℧/km and C = 0.0085 μF/km. Calculate the $Z_0, \gamma, \alpha, \beta$ reflection coefficient K, input impedance Z_s input power P_s, output power P_R and transmission efficiency.

Solution :

$$Z_0 = \sqrt{\frac{R + j\omega L}{G + j\omega C}} = \sqrt{\frac{10 + j(2\pi\times10^3)3.8\times10^{-3}}{1\times10^{-6} + j(2\pi\times10^3)0.0085\times10^{-6}}}$$

$$= \sqrt{\frac{10 + j23.876}{1\times10^{-6} + j5.34\times10^{-5}}} = \sqrt{\frac{25.885\angle67.27^{\circ}}{5.34\times10^{-5}\angle88.92^{\circ}}}$$

$$= \sqrt{4.847\times10^{5}\angle-21.65^{\circ}} = 696.204\angle-10.825^{\circ}\,\Omega$$

$$\gamma = \alpha + j\beta = \sqrt{(R + j\omega L)(G + j\omega C)}$$

$$= \sqrt{25.885\angle67.27^{\circ}\times5.34\times10^{-5}\angle88.92^{\circ}}$$

$$= 0.03717\angle78.095^{\circ} = 0.0076 + j0.03637$$

$$\alpha = 0.0076\ nepers/km$$

$$\beta = 0.03637\ rad/km$$

Tamilnadu College Of Engineering

$$K = \frac{Z_R - Z_0}{Z_R + Z_0} \text{ where } Z_R = 200\angle 0^\circ \Omega$$

$$= \frac{200\angle 0^\circ - 696.204\angle -10.825^\circ}{200\angle 0^\circ + 696.204\angle -10.825^\circ} = \frac{200 - 683.8153 + j130.754}{200 + 683.8153 + j130.754}$$

$$= \frac{-483.8153 + j130.754}{883.8153 - j130.754} = \frac{501.1724\angle 164.876^\circ}{893.435\angle -8.415^\circ}$$

$$= 0.5609\angle 173.291^\circ$$

$$Z_s = Z_0\left[\frac{e^{\gamma l} + Ke^{-\gamma l}}{e^{\gamma l} - Ke^{-\gamma l}}\right]$$

Now $e^{\gamma l} = e^{\alpha l}\angle \beta l \; rad = e^{0.00766\times 100}\angle 0.03637\times 100 \; rad$

$$= 2.1511\angle 3.637 rad = 2.1511\angle 208.4^\circ$$

$$e^{-\gamma l} = e^{-\alpha l}\angle -\beta l \, rad = e^{-0.00766\times 100}\angle -0.03637\times 100 \; rad$$

$$= 0.4648\angle -208.4^\circ$$

Therefore

$$Z_s = 696.204\angle -10.825\left[\frac{2.1511\angle 208.4^\circ + 0.5609\angle 173.29^\circ \times 0.4648\angle -208.4^\circ}{2.1511\angle 208.4^\circ - 0.5609\angle 173.29^\circ \times 0.4648\angle -208.4^\circ}\right]$$

$$= 696.204\angle -10.825\left[\frac{2.1511\angle 208.4^\circ + 0.2607\angle -35.11^\circ}{2.1511\angle 208.4^\circ - 0.2607\angle -35.11^\circ}\right]$$

$$= 696.204\angle -10.825\left[\frac{-1.8922 - j1.023 + 0.2132 - j0.1499}{-1.8922 - j1.023 - 0.2132 + j0.1499}\right]$$

$$= 696.204\angle -10.825\left[\frac{-1.679 - j1.1729}{-2.1054 - j0.8731}\right]$$

$$= 696.204\angle -10.825\left[\frac{2.0481\angle -145.062^\circ}{2.2792\angle -157.476^\circ}\right]$$

$$= 625.6122\angle 1.564^\circ \Omega$$

Tamilnadu College Of Engineering

$$I_s = \frac{E_s}{Z_s} = \frac{1\angle 0^\circ}{625.6122\angle 1.564^\circ} = 1.5984\times10^{-3}\angle -1.564\text{A}$$

Also $$I_s = \frac{I_R(Z_R+Z_0)}{2Z_0}[e^{\gamma l} - Ke^{-\gamma l}]$$

$$\therefore 1.5984\times10^{-3}\angle -1.564 = \frac{I_R(893.435\angle -8.415^\circ)}{2\times696.204\angle -10.825^\circ}[2.2792\angle -157.476^\circ]$$

$$1.5984\times10^{-3}\angle -1.564 = I_R\ 0.6416\angle 2.41^\circ[2.2792\angle -157.476^\circ]$$

$$I_R = 1.0932\times10^{-3}\angle 153.909^\circ\text{ A}$$

$$E_R = I_R Z_R = 1.0932\times10^{-3}\angle 153.909^\circ \times 200\angle 0^\circ$$

$$= 0.2186\angle 153.909^\circ$$

$$P_s = E_s I_s \cos\theta$$

θ = Angle between E_s and I_s = $0^\circ - 1.1564^\circ = -1.1564^\circ$

$$P_s = 1\angle 0^\circ \times 1.5984\times10^{-3}\cos(-1.1564^\circ)$$

$$= 1.598\times10^{-3}\text{W}$$

$$P_R = I_R^2 \times R = (1.0932\times10^{-3})^2\times 200$$

$$= 2.3897\times10^{-4}\text{W}$$

$$\%\eta = \frac{P_R}{P_s}\times100 = \frac{2.3897\times10^{-4}}{1.598\times10^{-3}}\times100$$

$$= 14.954\%$$

Example 3

A telephone transmission line 100 km long has $Z_0 = 685\angle -12^\circ\ \Omega$, $\alpha = 0.00497\ N/km$, $\beta = 0.0352$ rad/km at 10Hz. The line is terminated in $Z_R = 2000 + j0\ \Omega$ and is supplied by a generator with an emf of 10V and $Z_g = 700\ \Omega$. Calculate the values of $Z_s, I_s, I_R, E_R, P_s, P_R$ and $\%\eta$.

Solution:

$$Z_s = Z_0\left[\frac{e^{\gamma l} + Ke^{-\gamma l}}{e^{\gamma l} - Ke^{-\gamma l}}\right]$$

Tamilnadu College Of Engineering

Now

$$e^{\gamma l} = e^{\alpha l} \angle \beta l \text{ rad} = e^{0.00497 \times 100} \angle 0.0352 \times 100 \text{ rad}$$

$$= 1.6437 \angle 3.52 \text{ rad} = 1.6437 \angle 201.696^\circ = -1.527 - j\,0.607$$

$$e^{-\gamma l} = e^{-\alpha l} \angle -\beta l \text{ rad} = e^{-0.00497 \times 100} \angle -0.0352 \times 100 \text{ rad}$$

$$= 0.6083 \angle -3.52 \text{ rad} = 0.6083 \angle -201.696^\circ = -0.5652 + j\,0.248$$

$$K = \frac{Z_R - Z_0}{Z_R + Z_0}$$

$$= \frac{2000 \angle 0^\circ - 685 \angle -12^\circ}{2000 \angle 0^\circ + 685 \angle -12^\circ} = \frac{2000 - 670.03 + j\,142.419}{2000 + 670.03 - j\,142.419}$$

$$= \frac{1329.97 + j\,142.419}{2670.03 - j\,142.419} = \frac{1337.573 \angle 6.112^\circ}{2673.825 \angle -3.05^\circ}$$

$$= 0.5 \angle 9.162^\circ$$

$$K e^{-\gamma l} = 0.5 \angle 9.162^\circ \times 0.6083 \angle -201.696 = 0.30415 \angle -192.534^\circ$$

$$= -0.2969 + j\,0.066$$

$$e^{\gamma l} + K e^{-\gamma l} = -1.5272 - j\,0.607 - 0.2969 + j\,0.066$$

$$= -1.8241 - j\,0.541 = 1.9026 \angle -163.48^\circ$$

$$e^{\gamma l} - K e^{-\gamma l} = -1.5272 - j\,0.607 + 0.2969 - j\,0.066$$

$$= -1.2303 - j\,0.673 = 1.4023 \angle -151.32^\circ$$

$$Z_s = Z_0 \left[\frac{e^{\gamma l} + K e^{-\gamma l}}{e^{\gamma l} - K e^{-\gamma l}} \right]$$

$$= \frac{685 \angle -12^\circ \times 1.9026 \angle -163.48^\circ}{1.4023 \angle -151.32^\circ}$$

$$= 929.388 \angle -24.16^\circ = 847.98 - j\,380.385\,\Omega$$

Tamilnadu College Of Engineering

$$I_s = \frac{E_s}{Z_s + Z_g}$$

$$= \frac{10\angle 0^\circ}{847.98 - j\,380.385 + 700} = \frac{10\angle 0^\circ}{1594.031\angle -13.8^\circ}$$

$$= 6.2734\times 10^{-3}\angle 13.8^\circ \text{ A}$$

$$\text{Now } I_s = \frac{I_R\,(Z_R + Z_0)}{2\,Z_0}[e^{\gamma l} - K e^{-\gamma l}]$$

$$\text{Then } I_R = \frac{2\,Z_0\,I_s}{(Z_R + Z_0)\,[e^{\gamma l} - K e^{-\gamma l}]} = \frac{2\times 685\angle -12^\circ \times 6.2734\times 10^{-3}\angle 13.8^\circ}{2673.825\angle -3.05^\circ \times 1.4023\angle -151.32^\circ}$$

$$= 2.2921\times 10^{-3}\angle 156.17^\circ \text{ A}$$

$$E_R = I_R\,Z_R = 2.2921\times 10^{-3}\angle 156.17^\circ \times 2000$$

$$= 4.5842\angle 156.17^\circ \text{ V}$$

$$P_s = E_s\,I_s\cos\theta = 10\times 6.273\times 10^{-3}\cos(13.8^\circ)$$
$$= 0.06092 \text{ W}$$

$$P_R = E_R\,I_R\cos\theta = 4.5842\times 2.2921\times 10^{-3}\cos(0^\circ)$$
$$= 0.0105 \text{ W}$$

$$\%\,\eta = \frac{P_R}{P_s}\times 100 = \frac{0.0105}{0.06092}\times 100$$
$$= 17.2479\ \%$$

Example 4

A generator of 10 V, 7.5 kHz supplies power to a 50 km long line terminated in Z_0 and having the following constants, R = 2.6 Ω /km, L = 2.4 mH/ km, C = 0.0078 μF / km and G = 0.11 μ℧ / km. Calculate the power consumed in the load.

Solution:

$$Z_0 = \sqrt{\frac{R + j\omega L}{G + j\omega C}} \text{ where } \omega = 2\pi f = 2\pi\times 7.5\times 10^3$$

Tamilnadu College Of Engineering

$$= \sqrt{\frac{2.6 + j\,(2\pi \times 7.5 \times 10^3 \times 2.4 \times 10^{-3})}{0.11 \times 10^{-6} + j\,(2\pi \times 7.5 \times 10^3 \times 0.0078 \times 10^{-6}}}$$

$$= \sqrt{\frac{2.6 + j\,113.04}{(0.11 + j\,367.38) \times 10^{-6}}} = \sqrt{\frac{113.069 \angle 88.7^\circ}{367.38 \times 10^{-6} \angle 90^\circ}}$$

$$= \sqrt{0.3078 \times 10^6} \angle \frac{88.7^\circ - 90^\circ}{2} = 0.5548 \times 10^3 \angle -0.65^\circ$$

$$= 554.8 \angle -0.65^\circ\ \Omega$$

$$\gamma = \alpha + j\beta = \sqrt{(R + j\omega L)\,(G + j\omega C)}$$

$$= \sqrt{113.09 \angle 88.7^\circ \times 367.38 \times 10^{-6} \angle 90^\circ}$$

$$= \sqrt{41547.004 \times 10^{-6}} \angle \frac{88.7^\circ + 90^\circ}{2} = 203.83 \times 10^{-3} \angle 89.35^\circ$$

$$= 0.2038 \angle 89.35^\circ = 0.00218 + j\,0.02037$$

Hence $\alpha = 0.00218$ nepers / km and $\beta = 0.02037$ radians / km

$I_s = \dfrac{E_s}{Z_s}$, where $E_s = 10$ V, $Z_s = Z_R = Z_0$ and $l = 50$ km

$$I_s = \frac{10}{554.8 \angle -0.65^\circ} = 0.01802 \angle 0.65^\circ \text{ A}$$

Now $I_R = I_s = e^{-\gamma l} = I_s\, e^{-(\alpha + j\beta)l} = I_s\, e^{-\alpha l} \angle -\beta l$

$$= 0.01802 \angle 0.65^\circ \times e^{-0.00218 \times 50} \angle -0.02037 \times 50$$

$$= 0.01569\,(\angle 0.65^\circ + \angle -1.0185 \text{ rad})$$

$$= 0.01569\,(\angle 0.65^\circ + \angle -1.0185 \times \frac{180}{\pi} \text{ degree})$$

$$= 0.01569 \angle 0.65^\circ - 57.3^\circ$$

$$= 0.01569 \angle -56.65^\circ$$

Tamilnadu College Of Engineering

$$E_R = I_R Z_0 = 0.01569 \angle -56.65^\circ \times 554.8 \angle -0.65^\circ$$

$$= 8.7048 \angle 57.3^\circ \text{ V}$$

$$P_R = E_R I_R \cos\theta$$

$$\theta = \text{Angle between } E_R \text{ and } I_R = 57.3^\circ - 56.65^\circ = 0.65^\circ$$

$$P_R = 8.7048 \times 0.01569 \times \cos(0.65^\circ)$$

$$= 136.54 \text{ mW}$$

Example 5

An open wire line which is 200 km long is properly terminated. The generator at the sending end has $E_g = 10V, f = 1$ k Hz and internal impedance $Z_g = 500\,\Omega$. At that frequency Z_0 of the line is $700 - j\,100$ and $\gamma = 0.007 + j\,0.04$ per km. Determine the sending and receiving end voltage, current and power.

Solution:

$$|I_s| = \left|\frac{E_g}{Z_g + Z_o}\right|$$

$$= \left|\frac{10}{500 + 700 - j100}\right| = \frac{10}{\sqrt{(1200)^2 + (100)^2}} = 8.3 \times 10^{-3}$$

$$= 8.3 \text{ mA}$$

$$|E_s| = |I_s Z_s|$$

$$= 8.3 \times 10^{-3} \times \sqrt{(700)^2 + (100)^2}$$

$$= 5.869 \text{ V}$$

$$P_s = |I_s|^2 Z_s$$

$$= (8.3 \times 10^{-3})^2 \times \sqrt{(700)^2 + (100)^2} = 48.7 \times 10^{-3}$$

$$= 48.7 \text{ mW}$$

$$E_R = E_s e^{-\gamma l} = E_s e^{-\alpha l} \angle -\beta l \text{ rad, since } Z_R = Z_0$$

$$= 5.869\, e^{-0.007 \times 200} \angle -0.04 \times 200 = 1.45 \angle -8 \text{ rad}$$

$$= 1.45 \angle -458.5^\circ = 1.45 \angle -98.5^\circ$$

Tamilnadu College Of Engineering

$$|E_R| = 1.45 \text{ V}$$

$$|I_R| = \left|\frac{E_R}{Z_R}\right| \text{ where } Z_R = Z_0 = Z_s$$

$$= \frac{1.45}{\sqrt{(700)^2 + (100)^2}} = 2.05\, m\text{A}$$

$$P_R = |I_R|^2 Z_R = (2.05 \times 10^{-3})^2 \times \sqrt{(700)^2 + (100)^2}$$

$$= 2.97 \text{ mW}$$

Example 6

The characteristic impedance of a line is $728 \angle -15.5^\circ\ \Omega$ and its propagation constant is $0.00875 + j\,0.0291$ per km. The line is 200 km long and is terminated in an impedance of $400 \angle 45^\circ\ \Omega$. Find current through the load if the sending end voltage is 1 volts.

Solution:

Given that $Z_0 = 728 \angle -15.5^\circ$, $\alpha = 0.00875, \beta = 0.0291, l = 200\, km$,

$$Z_R = 400 \angle 45^\circ \text{ and } E_s = 1\text{V}$$

$$E_R = E_s\, e^{-\gamma l} = E_s\, e^{-\alpha l} \angle -\beta l$$

$$= 1 \times e^{-0.00875 \times 200} \angle -0.0291 \times 200 \text{ rad}$$

$$= 0.1737 \angle -0.0291 \times 200 \times \frac{180}{\pi} \text{ degree}$$

$$= 0.1737 \angle -26.5^\circ$$

$$I_R = \frac{E_R}{Z_R}$$

$$= \frac{0.1737 \angle -26.5^\circ}{400 \angle 45^\circ}$$

$$= 0.0004342 \angle -26.5^\circ - 45^\circ$$

$$= 0.4342 \angle -71.5^\circ\ m\text{A}$$

Tamilnadu College Of Engineering

Example 7

A lossless transmission line has a characteristic impedance of 200 Ω and is quarter wavelength long. What is the voltage at the open circuited receiving end if the sending end is connected to a generator which has 40 Ω internal impedance and a voltage of 5 volts?

Solution:

Given that $Z_0 = 200\,\Omega, l = \frac{\lambda}{4}, E_g = 5\,V, Z_g = 40\,\Omega$ and $I_R = 0$ (Open circuit)

$$I_s = \frac{E_g}{Z_g + Z_s} \text{ where } Z_s = Z_0$$

$$= \frac{5}{40+200} = 0.0208\text{ A}$$

$$E_s = I_s Z_s$$
$$= 0.0208 \times 200 = 4.16 \text{ volts}$$

$$E_R = E_s e^{-\gamma l} = E_s e^{-\alpha l} \angle -\beta l, \text{ where } l = \frac{\lambda}{4}$$

As the line is lossless so $\alpha = 0$. Therefore

$$E_R = E_s \angle -\beta l$$

$$= 4.16 \angle -\frac{2\pi}{\lambda} \times \frac{\lambda}{4}$$

$$= 4.16 \angle -90^\circ \text{ V}$$

Example 8

A cable has α = 0.4029 nepers/km and β = 0.28 rad/km if 3V are applied to the sending end, what will be the voltage at point 10 km down the line, when the line is terminated in its characteristic impedance?

Solution:

$$E_R = E_s e^{-\gamma l} = E_s e^{-\alpha l} \angle -\beta l$$

$$= 3 \times e^{-0.4029 \times 10} \angle -0.28 \times 10 \text{ rad}$$

$$= 0.05337 \angle -2.8 \times \frac{180}{\pi} \text{ degree}$$

$$= 0.05337 \angle -160.44^\circ \text{ V}$$

Tamilnadu College Of Engineering

Example 9

A transmission line has the following primary constants measured per km, $R = 10.15\ \Omega$, $L = 3.93$ mH, $C = 0.00797\ \mu F$ and $G = 0.29\ \mu \mho$. Determine Z_0 and γ at 796 Hz. Also calculate the ratio of current at a point which is 100 km down the line to the current at the sending end if the line is terminated in its characteristic impedance.

Solution:

$$Z_0 = \sqrt{\frac{R + j\omega L}{G + j\omega C}} \quad \text{where } \omega = 2\pi f = 2\pi \times 796 = 5 \times 10^3 \text{ rad / sec}$$

$$= \sqrt{\frac{10.15 + j\,5 \times 10^3 \times 3.93 \times 10^{-3}}{0.28 \times 10^{-6} + j\,5 \times 10^3 \times 0.00797 \times 10^{-6}}}$$

$$= \sqrt{\frac{10.15 + j\,19.65}{0.29 \times 10^{-6} + j\,3.985 \times 10^{-5}}} = \sqrt{\frac{22.1166 \angle 62.68^\circ}{3.985 \times 10^{-5} \angle 89.58^\circ}}$$

$$= 744.97 \angle -13.45^\circ\ \Omega$$

$$\gamma = \sqrt{(R + j\omega L)(G + j\omega C)}$$

$$= \sqrt{22.1166 \angle 62.68^\circ \times 3.985 \times 10^{-5} \angle 89.58^\circ} = 0.02968 \angle 76.13^\circ$$

$$= 0.00711 + j\,0.0288$$

Therefore $\alpha = 0.00711$ nepers / km and $\beta = 0.0288$ rad / km

Now $\quad I_R = I_s\, e^{-\gamma l} = I_s\, e^{-\alpha l} \angle -\beta l$, since $Z_R = Z_0$

$$\frac{I_R}{I_s} = e^{-\alpha l} \angle -\beta l = e^{-0.00711 \times 100} \angle -0.0288 \times 100 \text{ rad}$$

$$= 0.49115 \angle -2.88 \times \frac{180}{\pi} \text{ degree}$$

$$= 0.49115 \angle -165.024^\circ$$

Tamilnadu College Of Engineering

Example 10

An open wire line is 200 km long is correctly terminated. The generator at the sending end has $E_g = 10V, f = 1$ kHz and internal impedance of $500\,\Omega$. At that frequency $Z_0 = 683 - j\,138$ and $\gamma = 0.0074 + j\,0.0356$ per km. Determine the sending and receiving end voltage, current and power.

Solution:

$$|I_s| = \left|\frac{E_g}{Z_g + Z_s}\right| \text{ where } Z_s = Z_0 = Z_R$$

$$= \left|\frac{10}{500 + 683 - j\,138}\right| = \frac{10}{\sqrt{(1183)^2 + (138)^2}}$$

$$= 8.4 \text{ mA}$$

$$|E_s| = |I_s\, Z_s|$$

$$= 8.4 \times 10^{-3} \times \sqrt{(683)^2 + (138)^2}$$

$$= 5.83 \text{ V}$$

$$P_s = |I_s|^2 R_s \text{ where } R_s = 683\,\Omega$$

$$= (8.4 \times 10^{-3})^2 \times 683 = 48.3 \times 10^{-3}$$

$$= 48.3 \text{ mW}$$

$$E_R = E_s\, e^{-\gamma l} = E_s\, e^{-\alpha l} \angle -\beta l, \text{ since } Z_R = Z_0$$

$$= 5.83\, e^{-0.0074 \times 200} \angle -0.0356 \times 200 \text{ rad}$$

$$= 1.33 \angle -7.12 \times \frac{180}{\pi} \text{ degree} = 1.33 \angle -407.94^\circ$$

$$= 1.33 \angle -48^\circ \text{ V}$$

Tamilnadu College Of Engineering

$$|I_R| = \left|\frac{E_R}{Z_R}\right|$$

$$= \frac{1.33}{\sqrt{(683)^2 + (138)^2}} = 1.91 \times 10^{-3}$$

$$= 1.91 \text{ mA}$$

$$P_R = |I_R|^2 R_R \text{ where } R_R = 683\,\Omega$$

$$= (1.91 \times 10^{-3})^2 \times 683 = 2.49 \times 10^{-3}$$

$$= 2.49 \text{ m W}$$

Example 11

A stimulated line is composed of T sections of pure resistance $Z_1 = 50\Omega$ and $Z_2 = 4000\Omega$ find Z_0 and γ. A line composed of 50 such sections in series is terminated in its characteristic impedance with a generator of 1V and 400Ω internal resistance at the sending end. Find I_s and I_R.

Solution:

A symmetrical T section is shown in figure

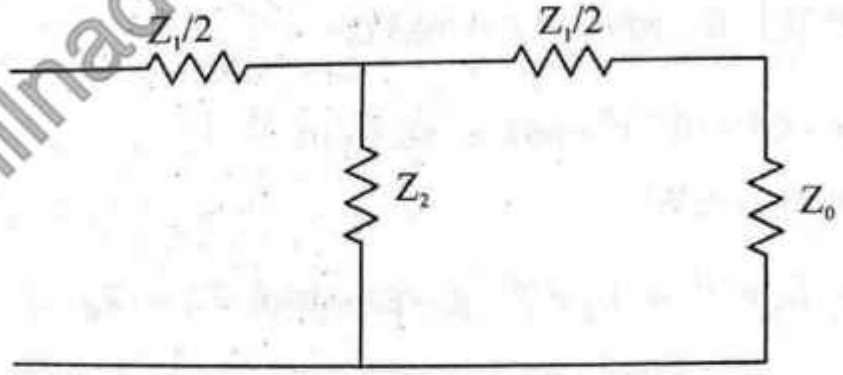

$$Z_0 = \sqrt{\frac{Z_1^2}{4} + Z_1 Z_2}$$

$$= \sqrt{\frac{(50)^2}{4} + 50 \times 4000}$$

$$= 447.9\,\Omega$$

Tamilnadu College Of Engineering

$$\gamma = ln\left[1+\frac{Z_1}{2\,Z_2}+\sqrt{\frac{Z_1}{Z_2}\left(1+\frac{Z_1}{4\,Z_2}\right)}\right]$$

$$= ln\left[1+\frac{50}{2\times 4000}+\sqrt{\frac{50}{4000}\left(1+\frac{50}{4\times 4000}\right)}\right]$$

$$= 0.117$$

$$I_s = \frac{E_s}{Z_0+R_s}$$

$$= \frac{1}{400+447.9} = 1.17\times 10^{-3}$$

$$= 1.17 \text{ mA}$$

$$I_R = I_s\, e^{-\gamma l}, \text{ since } Z_R = Z_0 \text{ and } l = 50$$

$$= 1.17\times 10^{-3}\, e^{-0.117\times 50} = 3.369\times 10^{-3}$$

$$= 3.369 \text{ mA}$$

Example 12

A cable has α = 0.01 nepers / km and β=0.0018 radian / km and having length of 100 km. Find receiving end voltage. When the line is terminated in its characteristic impedance and E_s = 5V.

Solution:

$$E_R = E_s\, e^{-\gamma l} = E_s\, e^{-\alpha l}\angle -\beta l, \text{ since } Z_R = Z_0$$

$$= 5\, e^{-0.01\times 100}\angle -0.0018\times 100 \text{ rad}$$

$$= 1.84\angle -0.18\times\frac{180}{\pi} \text{ degree}$$

$$= 1.84\angle 10.3^\circ \text{ V}$$

Tamilnadu College Of Engineering

1.12 INPUT AND TRANSFER IMPEDANCE

Input impedance or sending end impedance of a transmission line is defined as the ratio of sending end voltage to the sending end current. The equation of sending end voltage and current are

$$E_s = \frac{E_R(Z_R + Z_0)}{2Z_R}\left[e^{\gamma l} + \left(\frac{Z_R - Z_0}{Z_R + Z_o}\right)e^{-\gamma l}\right]$$

$$I_s = \frac{I_R(Z_R + Z_0)}{2Z_0}\left[e^{\gamma l} - \left(\frac{Z_R - Z_0}{Z_R + Z_0}\right)e^{-\gamma l}\right]$$

Since $K = \dfrac{Z_R - Z_0}{Z_R + Z_0}$

$$E_s = \frac{E_R(Z_R + Z_0)}{2Z_R}[e^{\gamma l} + Ke^{-\gamma l}]$$

$$I_s = \frac{I_R(Z_R + Z_0)}{2Z_0}[e^{\gamma l} - Ke^{-\gamma l}]$$

$$Z_s = \frac{E_s}{I_s} = \frac{E_R Z_0}{I_R Z_R}\left[\frac{e^{\gamma l} + Ke^{-\gamma l}}{e^{\gamma l} - Ke^{-\gamma l}}\right]$$

But $E_R = I_R Z_R$

Therefore $Z_s = Z_0\left[\dfrac{e^{\gamma l} + Ke^{-\gamma l}}{e^{\gamma l} - Ke^{-\gamma l}}\right]$

The sending end voltage becomes

$$E_s = \frac{I_R Z_R(Z_R + Z_0)}{2Z_R}[e^{\gamma l} + Ke^{-\gamma l}]$$

$$E_s = \frac{I_R(Z_R + Z_0)}{2}[e^{\gamma l} + Ke^{-\gamma l}]$$

The **transfer impedance** is defined as the ratio of sending end voltage to the receiving end current. Therefore

Tamilnadu College Of Engineering

$$Z_T = \frac{E_s}{I_R} = \frac{(Z_R + Z_0)}{2}\left[e^{\gamma l} + Ke^{-\gamma l}\right]$$

Alternatively the sending end voltage and current equations are

$$E_s = E_R \cosh \gamma l + I_R Z_0 \sinh \gamma l \quad \text{... (1)}$$

$$I_s = I_R \cosh \gamma l + \frac{E_R}{Z_0} \sinh \gamma l \quad \text{... (2)}$$

Since $E_R = I_R Z_R$. Therefore equation (1) becomes

$$E_s = I_R Z_R \cosh \gamma l + I_R Z_0 \sinh \gamma l$$

$$E_s = I_R [Z_R \cosh \gamma l + Z_0 \sinh \gamma l]$$

$$Z_T = \frac{E_s}{I_R} = Z_R \cosh \gamma l + Z_0 \sinh \gamma l$$

$$Z_s = \frac{E_s}{I_s} = \frac{I_R Z_R \cosh \gamma l + I_R Z_0 \sinh \gamma l}{I_R \cosh \gamma l + \frac{I_R Z_R}{Z_0} \sinh \gamma l}$$

$$Z_s = Z_0\left[\frac{I_R Z_R \cosh \gamma l + I_R Z_0 \sinh \gamma l}{I_R Z_0 \cosh \gamma l + I_R Z_R \sinh \gamma l}\right]$$

$$Z_s = Z_0\left[\frac{Z_R \cosh \gamma l + Z_0 \sinh \gamma l}{Z_0 \cosh \gamma l + Z_R \sinh \gamma l}\right]$$

1.13 OPEN AND SHORT CIRCUITED LINES

The input impedance of a line of length l is

$$Z_s = Z_0\left[\frac{Z_R \cosh \gamma l + Z_0 \sinh \gamma l}{Z_0 \cosh \gamma l + Z_R \sinh \gamma l}\right] = Z_0\left[\frac{\cosh \gamma l + \frac{Z_0}{Z_R} \sin \gamma l}{\frac{Z_0}{Z_R} \cosh \gamma l + \sinh \gamma l}\right]$$

At short circuit $Z_s = Z_{sc}$ and $Z_R = 0$

Tamilnadu College Of Engineering

Then $$Z_{sc} = Z_0\left[\frac{\frac{Z_0}{Z_R}\sinh\gamma l}{\frac{Z_0}{Z_R}\cosh\gamma l}\right]$$

$$Z_{sc} = Z_0 \tanh\gamma l \quad \text{... (1)}$$

At open circuit $Z_s = Z_{oc}$ and $Z_R = \infty$

$$Z_{oc} = Z_0\left[\frac{\cosh\gamma l}{\sinh\gamma l}\right] \text{ where } \frac{1}{\infty} = 0$$

$$Z_{oc} = Z_o \coth\gamma l \quad \text{... (2)}$$

Multiplying equation (1) and (2)

$$Z_0 = \sqrt{Z_{sc}Z_{oc}}$$

Dividing equation (1) by (2)

$$\tanh\gamma l = \sqrt{\frac{Z_{sc}}{Z_{oc}}} \text{ (or) } \gamma l = \tanh^{-1}\sqrt{\frac{Z_{sc}}{Z_{oc}}}$$

1.14 REFLECTION FACTOR

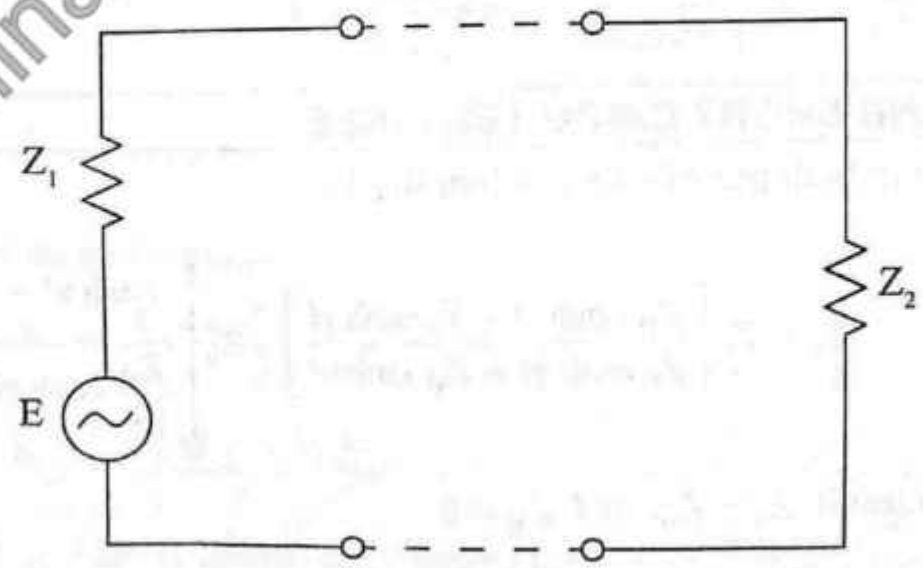

Figure 1.12 Mismatched impedance

Tamilnadu College Of Engineering

If Z_2 is not equal to Z_1, the impedance mismatch cause a change in the ratio of voltage to current, thus a portion of the energy is reflected by the load. It is shown in figure 1.8.

The magnitude of the reflection loss may be determined by computing the ratio of the current actually flowing in the load to that which would flow if the impedance were matched at the terminals. According to the theory of the ideal transformer

$$\frac{I_1}{I_2} = \sqrt{\frac{Z_2}{Z_1}}$$

For image matching the magnitude of Z_2 may be adjusted to that of Z_1 by choosing the proper transformer ratio. Under these conditions Z_2 is image matched to Z_1, and the current which would then flow through the generator would be

$$I_1 = \frac{E}{2Z_1}$$

Then the current I_2^1 that would flow in the load, or secondary of the transformer under image matching,

$$I_2^1 = \frac{E}{2Z_1}\sqrt{\frac{Z_1}{Z_2}} = \frac{E}{2\sqrt{Z_1Z_2}}$$

Whereas without image matching this current would have been

$$|I_2| = \frac{|E|}{|Z_1 + Z_2|}$$

Hence the ratio of the current actually flowing in the load to that which might flow under image matched conditions is

$$\frac{|I_2|}{|I_2^1|} = \frac{\dfrac{|E|}{|Z_1 + Z_2|}}{\dfrac{|E|}{|2\sqrt{Z_1Z_2}|}} = \frac{|2\sqrt{Z_1Z_2}|}{|Z_1 + Z_2|}$$

Tamilnadu College Of Engineering

This ratio indicates the change in current in the load due to reflection at the mismatched junction and is called the reflection factor. It is denoted by k, where

$$k = \left|\frac{2\sqrt{Z_1 Z_2}}{Z_1 + Z_2}\right|$$

1.15 REFLECTION LOSS

The reflection loss is defined as the number of nepers or decibels by which the current in the load under image matched conditions would exceed the current actually flowing in the load. It is a reciprocal of k.

$$\text{Reflection loss} = ln\left|\frac{Z_1 + Z_2}{2\sqrt{Z_1 Z_2}}\right| nepers$$

$$\text{Reflection loss} = 20 \log\left|\frac{Z_1 + Z_2}{2\sqrt{Z_1 Z_2}}\right| db$$

SOLVED PROBLEMS

Example 13

1. ***The constants of a transmission line are $R = 6\Omega/km$, $L = 2.2mH/km$ $G = 0.25\times10^{-6}\,\mho/km$ and $C = 0.005\times10^{-6}\,F/km$. Determine the characteristic impedance and propagation constant at 1000 Hz.***

Solution :

The characteristic impedance is given by

$$Z_0 = \sqrt{\frac{R + j\omega L}{G + j\omega C}} \quad \text{where } \omega = 2\pi f = 2\pi\times1000$$

$$= \sqrt{\frac{6 + j(2\pi\times1000)(2.2\times10^{-3})}{0.25\times10^{-6} + j(2\pi\times1000)(0.005\times10^{-6})}}$$

Tamilnadu College Of Engineering

$$= \sqrt{\frac{6 + j13.823}{0.25\times10^{-6} + j31.4159\times10^{-6}}} = \sqrt{\frac{15.069\angle 66.53^\circ}{3.1416\times10^{-5}\angle 89.54^\circ}}$$

$$= 692.575\angle\frac{66.53^\circ - 89.54^\circ}{2}$$

$$= 692.575\angle -11.51^\circ\,\Omega$$

The propagation constant is given by

$$\gamma = \sqrt{(R + j\omega L)(G + j\omega C)}$$

$$= \sqrt{(15.069\angle 66.53^\circ)(3.1416\times10^{-5}\angle 89.54^\circ)}$$

$$= 0.02175\angle\frac{66.53^\circ + 89.54^\circ}{2}$$

$$\gamma = 0.02175\angle 78.04^\circ = 0.0045 + j0.02127$$

Example 14

A cable has the following parameters R = 48.75 Ω/km, L=1.09mH/km, G=38.75 μ /km and C= 0.059 μF/km. Determine the characteristic impedance, propagation constant and wavelength for a source of f = 1600Hz and E_s = 1Volts.

Solution :

The characteristic impedance is given by

$$Z_0 = \sqrt{\frac{R + j\omega L}{G + j\omega C}} \text{ where } \omega = 2\pi f = 2\pi\times1600$$

$$= \sqrt{\frac{48.75 + j(2\pi\times1600)(1.09\times10^{-3})}{38.75\times10^{-6} + j(2\pi\times1600)(0.059\times10^{-6})}}$$

$$= \sqrt{\frac{48.75 + j10.9578}{38.75\times10^{-6} + j593.13\times10^{-6}}} = \sqrt{\frac{49.9663\angle 12.67^\circ}{5.9439\times10^{-4}\angle 86.26^\circ}}$$

Tamilnadu College Of Engineering

$$= 289.93, \angle \frac{12.67^\circ - 86.26^\circ}{2} \quad = 289.93 \angle -36.79^\circ \Omega$$

The propagation constant is given by

$$\gamma = \sqrt{(R + j\omega L)(G + j\omega C)} = \alpha + j\beta$$

$$= \sqrt{(49.9663 \angle 12.67^\circ)(5.9439 \times 10^{-4} \angle 86.26^\circ)}$$

$$= 0.1723 \angle \frac{12.67^\circ + 86.26^\circ}{2} = 0.1723 \angle 49.465^\circ$$

$$= 0.1119 + j0.13095$$

Equating real and imaginary parts,

$$\alpha = 0.1119 \; nepers/km \text{ and } \beta = 0.13095 \text{ rad/km}$$

The wavelength is given

$$\lambda = \frac{2\pi}{\beta} = \frac{2\pi}{0.13095} = 47.9815 km$$

Example 15

The charactreistics impedance of a transmission line at 8MHz is (40-j2) Ω and the propagation constant is (0.01+j0.18) per metre. Find the primary constants.

Solution :

Given that

$$Z_o = \sqrt{\frac{R + j\omega L}{G + j\omega C}} = 40 - j2 = 40.05 \angle -2.86 \quad \ldots (1)$$

$$\gamma = \sqrt{(R + j\omega L)(G + j\omega C)} = (0.01 + j0.18) = 0.1803 \angle 86.82^\circ \ldots (2)$$

Multiplying equation (1) and (2),

$$R + j\omega L = (40.05 \angle -2.86^\circ)(0.1803 < 86.82^\circ) = 7.221 \angle -2.86^\circ + 86.82^\circ$$

$$= 7.221 \angle 83.96^\circ = 0.7598 + j7.1809$$

Tamilnadu College Of Engineering

Equating real and imaginary parts,

$$R = 0.7598\ \Omega/m$$

$$\omega L = (2\pi f)\,L = 7.1809 \text{ where } f = 8\times10^6 \text{Hz}$$

$$L = \frac{7.1809}{2\pi\times8\times10^6} = 0.1428\mu H/m$$

Dividing equation (2) by (1),

$$G + j\omega C = \frac{0.1803\angle 86.82^\circ}{40.05\angle -2.86^\circ} = 4.5018\times10^{-3}\angle 86.82^\circ - (-2.86^\circ)$$

$$= 4.5018\times10^{-3}\angle 89.68^\circ = 25.1426\times10^{-6} + j4.501\times10^{-3}$$

Equating real and imaginary parts,

$$G = 25.1426\times10^{-6}\ \mho/m$$

$$\omega C = (2\pi f)C = 4.501\times10^{-3}$$

$$C = \frac{4.501\times10^{-3}}{2\pi\times8\times10^6} = 89.5445\,pF/m$$

Example 16

The characteristic impedance of a uniform transmission line is 2309.6Ω at a frequency of 800 MHz. At this frequency, the propagation constant is 0.054 (0.0366+j 0.99). Determine R and L.

Solution :

Given that

$$Z_o = \sqrt{\frac{R + j\omega L}{G + j\omega C}} = 2309.6 \qquad \text{... (1)}$$

$$\gamma = \sqrt{(R + j\omega L)(G + j\omega C)} = 0.054(0.0366 + j0.99) \qquad \text{... (2)}$$

Tamilnadu College Of Engineering

Multiplying equation (1) and (2)

$$R + j\omega L = (2309.6)\,[0.054\,(0.0366 + j0.99)]$$

$$R = 4.5647 + j\,123.4712$$

Equating real and imaginary parts,

$$R = 4.5647\,\Omega$$

$$\omega L = (2\pi f)L = 123.4712 \text{ where } f = 800\times10^6\,\text{Hz}$$

$$L = \frac{123.4712}{2\pi\times800\times10^6} = 0.02456\,\mu\text{H}$$

Example 17

The characteristic impedance of a 805m long transmission line is $94\angle-23.2^\circ\,\Omega$, the attenuation constant is 74.5×10^{-6} nepers/m and the phase shift constant is 174×10^{-6} rad/m at 5kHz. Calculate the line parameters R, L, G, C and the phase velocity on the line.

Solution :

Given that

$$Z_0 = \sqrt{\frac{R + j\omega L}{G + j\omega C}} = 94\angle-23.2^\circ \quad \text{... (1)}$$

$$\alpha = 74.5\times10^{-6} \text{ and } \beta = 174\times10^{-6}$$

Therefore $\gamma = \alpha + j\beta = \sqrt{(R + j\omega L)(G + j\omega C)} = 74.5\times10^{-6} + j174\times10^{-6}$ ... (2)

Multiplying equation (1) and (2),

$$R + j\omega L = (94\angle-23.2^\circ)\,(74.5\times10^{-6} + j174\times10^{-6})$$

$$= (94\angle-23.2^\circ)\,(1.8927\times10^{-4}\angle66.82^\circ)$$

$$= 0.01779\angle43.62^\circ = 0.01287 + j0.01227$$

Equating real and imaginary parts,

$$R = 0.01287\,\Omega/m$$

$$\omega L = (2\pi f)\,L = 0.01227 \text{ where } f = 5\times10^3\,\text{Hz}$$

Tamilnadu College Of Engineering

$$L = \frac{0.01227}{2\pi \times 5 \times 10^3} = 0.3905\mu H/m$$

Dividing equation (2) by (1)

$$G + j\omega C = \frac{1.8927 \times 10^{-4} \angle 66.82^\circ}{94 \angle -23.2^\circ}$$

$$= 2.0135 \times 10^{-6} \angle 90^\circ = 0 + j2.0135 \times 10^{-6}$$

Equation real and imaginary parts,

$$G = 0 \, ℧/m$$

$$\omega C = (2\pi f)C = 2.0135 \times 10^{-6}$$

$$C = \frac{2.0135 \times 10^{-6}}{2\pi \times 5 \times 10^3} = 64.092 pF/m$$

The velocity of propagation or phase velocity is given by

$$v = \frac{\omega}{\beta} = \frac{2\pi f}{\beta}$$

$$= \frac{2\pi \times 5 \times 10^3}{174 \times 10^{-6}}$$

$$v = 180 \times 10^6 m/s$$

Example 18

A transmission line has L=10mH/m, C=10⁻⁷F/m, R=20Ω/m and G=10⁻⁵℧/m. Find the input impedance at a frequency of $\left(\frac{5000}{2\pi}\right)$Hz, if the line is very long.

Solution :

If the line is very long, then input impedance is equal to its characteristic impedance. Therefore

$$Z_s = Z_o = \sqrt{\frac{R + j\omega L}{G + j\omega C}} \text{ where } \omega = 2\pi f = 2\pi\left(\frac{5000}{2\pi}\right) = 5000$$

Tamilnadu College Of Engineering

$$Z_s = \sqrt{\frac{20 + j(5000)(10\times10^{-3})}{10^{-5} + j(5000)\,(1\times10^{-7})}} = \sqrt{\frac{20 + j50}{10^{-5} + j5\times10^{-4}}}$$

$$= \sqrt{\frac{53.8516\angle 68.19^\circ}{5\times10^{-4}\angle 88.85^\circ}} = 328.1816\angle\frac{68.19^\circ - 88.85^\circ}{2}$$

$$= 328.1816\angle -10.33^\circ\,\Omega$$

Example 19

A 2 meter long transmission line with characteristic impedance of 60 + j 40Ω is operating at $\omega = 10^6$ rad/sec has attenuation constant of 0.921 nepers/m and phase shift constant of 0 rad/m. If the line is terminated by a load of 20 + j50Ω, determine the input impedance of this line.

Solution :

Given that $Z_o = 60 + j40 = 72.111\angle 33.69^\circ$

$$Z_L = Z_R = 20 + j50 = 53.8516\angle 68.19^\circ$$

$$l = 2m,\ \omega = 10^6,\ \alpha = 0.921 \text{ and } \beta = 0$$

The input impedance is given by

$$Z_s = Z_o\left[\frac{Z_R\cosh\gamma l + Z_o\sinh\gamma l}{Z_o\cosh\gamma l + Z_R\sinh\gamma l}\right]$$

$$\cosh\gamma l = \cosh(\alpha + j\beta)l = \cosh\alpha l = \cosh(0.921)\,(2) = 3.2338$$

$$\sinh\gamma l = \sinh(\alpha + j\beta)l = \sinh\alpha l = \sinh(0.921)\,(2) = 3.07532$$

Therefore

$$Z_s = 72.111\angle 33.69^\circ\left[\frac{(53.85\angle 68.19^\circ)\,(3.23) + (72.11\angle 33.69^\circ)\,(3.075)}{(72.11\angle 33.69^\circ)\,(3.23) + (53.85,\angle 68.19^\circ)\,(3.075)}\right]$$

Tamilnadu College Of Engineering

$$= 72.11 < 33.69^\circ \left[\frac{(174.14 \angle 68.19) + (221.76 \angle 33.69^\circ)}{(233.19 \angle 33.69^\circ) + (165.61 \angle 68.19^\circ)} \right]$$

$$= 72.11 \angle 33.69^\circ \left[\frac{(64.7 + j161.68) + (184.51 + j123.012)}{(194.028 + j129.35) + (61.52 + j153.75)} \right]$$

$$= 72.111 \angle 33.69^\circ \left[\frac{249.21 + j284.69}{255.55 + j283.10} \right]$$

$$= 72.111 \angle 33.69^\circ \left[\frac{378.36 \angle 48.8^\circ}{381.39 \angle 47.92^\circ} \right]$$

$$= 71.53 \angle 34.57^\circ \Omega$$

Example 20

A transmission line has $Z_0 = 745 \angle -12^\circ \Omega$ and is terminated in $Z_R = 100\Omega$. Calculate the reflection loss in db.

Solution :

The reflection factor is given by,

$$k = \left| \frac{2\sqrt{Z_1 Z_2}}{Z_1 + Z_2} \right| \quad \text{where } Z_1 = Z_R \text{ and } Z_2 = Z_o$$

$$= \frac{2\sqrt{100 \times 745}}{|100 + j0 + 745 \angle -12^\circ|} = \frac{545.8937}{|100 + j0 + 728.72 - j154.894|}$$

$$= \frac{545.8937}{|828.72 - j154.894|} = \frac{545.8937}{843.0711}$$

$$= 0.6475$$

$$\text{Therefore Reflection loss} = 20 \log \frac{1}{|k|} = 20 \log \frac{1}{0.6475}$$

$$= 3.7751 \; db$$

Tamilnadu College Of Engineering

Example 21

Calculate the reflection coefficient of an open and short circuited line.

Solution :

$$\text{Reflection coefficient } K = \frac{Z_R - Z_0}{Z_R + Z_0} = \frac{1 - \frac{Z_0}{Z_R}}{1 + \frac{Z_0}{Z_R}}$$

For short circuit line $Z_R = 0$

Then $K = -1 = 1\angle 180^\circ$

For open circuit line $Z_R = \infty$

Then $K = 1 = 1\angle 0^\circ$

Example 22

Find the reflection coefficient of a 50Ω transmission line when it is terminated by a load impedance of 60+j40Ω.

Solution :

Given that $Z_0 = 50\Omega$ *and* $Z_R = 60 + j40\Omega$

The reflection coefficient is given by,

$$K = \frac{Z_R - Z_0}{Z_R + Z_0} = \frac{(60 + j40) - 50}{(60 + j40) + 50} = \frac{10 + j40}{110 + j40}$$

$$= \frac{41.231\angle 75.96^\circ}{117.0469\angle 19.98^\circ} = 0.3522\angle 75.96^\circ - 19.98^\circ$$

$$= 0.3522\angle 55.9^\circ$$

Example 23

Find the attenuation and phase shift constant of a wave propagating along the line whose propagation constant is $1.048 \times 10^{-4}\angle 88.8^\circ$.

Solution :

Given that $\gamma = \alpha + j\beta = 1.048\times 10^{-4}\angle 88.8^\circ = 2.1947\times 10^{-6} + j1.04777\times 10^{-4}$

Tamilnadu College Of Engineering

Equating real and imaginary parts,

$$\alpha = 2.1947\times10^{-6} neper/m$$

$$\beta = 1.04777\times10^{-4} rad/m$$

Example 24

Find the characteristic impedance of a line where $Z_{sc} = 1520 \angle 16^\circ \Omega$ and $Z_{oc} = 2.86 \angle -40^\circ$ at 700Hz.

Solution :

The characteristic impedance of a line is given by

$$Z_o = \sqrt{Z_{sc} Z_{oc}}$$

$$= \sqrt{1520 \angle 16^\circ \times 2.86 \angle -40^\circ} = 659.33 \angle \frac{16^\circ - 40^\circ}{2}$$

$$= 659.33 \angle -12^\circ \Omega$$

Example 25

A distortionless line has R = 0.1151 Ω/m , L = 250 nH/m and C = 0.1 nF/m. Find G, velocity of propagation, α and β at 1kHz.

Solution :

The condition for distortion less line is,

$$\frac{R}{L} = \frac{G}{C} \text{ or } LG = CR$$

$$\text{Therefore } G = \frac{RC}{L} = \frac{0.1151\times0.1\times10^{-9}}{250\times10^{-9}}$$

$$= 46.04\ \mu\mho/m$$

The velocity of propagation is,

$$v = \frac{1}{\sqrt{LC}} = \frac{1}{\sqrt{250\times10^{-9}\times0.1\times10^{-6}}}$$

$$= 2\times10^{8}\ m/s$$

Tamilnadu College Of Engineering

The attenuation constant is,

$$\alpha = \sqrt{RG} = \sqrt{0.1151 \times 46.04 \times 10^{-6}}$$

$$= 0.0023 \; nepers/m$$

The phase constant is,

$$\beta = \omega\sqrt{LC} \text{ where } \omega = 2\pi f = 2\pi \times 1000$$

$$= 2\pi \times 1000\sqrt{250 \times 10^{-9} \times 0.1 \times 10^{-9}}$$

$$= 3.1416 \times 10^{-5} \; rad/m$$

Example 26

A distortionless line has $Z_0 = 60\Omega$, $\alpha = 20$ mNp/m and $v = 1.8 \times 10^8$ m/s. Find R,L,G,C and λ at 100 MHz.

Solution:

For a distortionless line,

$$RC = GL \text{ or } G = \frac{RC}{L}$$

and hence

$$Z_0 = \sqrt{\frac{L}{C}} \qquad \text{... (1)}$$

$$\alpha = \sqrt{RG} = R\sqrt{\frac{C}{L}} = \frac{R}{Z_0}$$

Therefore $$R = \alpha Z_0 \qquad \text{... (2)}$$

$$G = \frac{\alpha^2}{R} \qquad \text{... (3)}$$

But $$v = \frac{\omega}{\beta} = \frac{1}{\sqrt{LC}} \qquad \text{... (4)}$$

From equation (2) $R = \alpha Z_0 = (20 \times 10^{-3})(60) = 1.2 \; \Omega/m$

Dividing equation (1) by (4),

Tamilnadu College Of Engineering

$$L = \frac{Z_0}{v} = \frac{60}{1.8 \times 10^8} = 333\, n\,H/m$$

From equation (3), $G = \frac{\alpha^2}{R} = \frac{(2 \times 10^{-3})^2}{1.2} = 333 \mu \mho / m$

Multiplying equations (1) and (4)

$$vZ_0 = \frac{1}{C}$$

Therefore $$C = \frac{1}{vZ_0} = \frac{1}{(1.8 \times 10^8) \times 60} = 92.59\ pF/m$$

Example 27

A telephone cable of 60km long has a resistance of 10Ω / km and a capacitance of 0.008 μF/km. Calculate wavelength of the line at 1600Hz.

Solution :

Given that length of the telephone cable is 60km. Therefore total resistance and total capacitance of telephone cable are,

$$R = 10 \times 60 = 600\ \Omega$$

$$C = 0.008 \times 10^{-6} \times 60 = 0.48 \times 10^{-6}\ F$$

In case of telephone cable phase constant is given by,

$$\beta = \sqrt{\frac{\omega CR}{2}} \quad \text{where } \omega = 2\pi f = 2\pi \times 1600$$

$$= \sqrt{\frac{2\pi \times 1600 \times 0.48 \times 10^{-6} \times 600}{2}}$$

$$= 1.2028 \text{ rad/m}$$

The wavelength of the telephone cable is given by,

$$\lambda = \frac{2\pi}{\beta} = \frac{2\pi}{1.2028}$$

$$= 5.2211\ m$$

Tamilnadu College Of Engineering

Example 28

A transmission line has the following parameters per unit length $L = 0.1\ \mu H$, $R = 5\Omega$, $C = 300\ pF$ and $G = 0.01\mho$. Calculate the propagation constant and characteristic impedance of the line at 500 MHz. Obtain the same parameters for the lossless line.

Solution:

$$Z_0 = \sqrt{\frac{R + j\omega L}{G + j\omega C}} \text{ where } \omega = 2\pi f = 2\pi \times 500 \times 10^6 \text{ rad/sec}$$

$$= \sqrt{\frac{5 + j\,2\pi \times 500 \times 10^6 \times 0.1 \times 10^{-6}}{0.01 + j\,2\pi \times 500 \times 10^6 \times 300 \times 10^{-12}}}$$

$$= \sqrt{\frac{5 + j\,314.1592}{0.01 + j\,0.9424}} = \sqrt{\frac{314.199 \angle 89.088^\circ}{0.9425 \angle 89.39^\circ}}$$

$$= 18.2583 \angle -0.151^\circ\ \Omega$$

$$\gamma = \sqrt{(R + j\omega L)(G + j\omega C)} = \alpha + j\beta$$

$$= \sqrt{314.199 \angle 89.088^\circ \times 0.9425 \angle 89.39^\circ}$$

$$= 17.2085 \angle 89.239^\circ$$

$$= 0.2285 + j\,17.2069$$

$$\alpha = 0.2285 \text{ nepers/}km$$

$$\beta = 17.2069 \text{ rad/}km$$

For the lossless line $R = G = \alpha = 0$. Therefore

$$Z_0 = \sqrt{\frac{L}{C}}$$

$$= \sqrt{\frac{0.1 \times 10^{-6}}{300 \times 10^{-12}}}$$

$$= 18.2574\ \Omega$$

Tamilnadu College Of Engineering

$$\beta = \omega\sqrt{LC}$$

$$= 2\pi \times 500 \times 10^6 \times \sqrt{0.1 \times 10^{-6} \times 300 \times 10^{-12}}$$

$$= 17.2069 \text{ rad/km}$$

Example 29

A voltage of 45 V is applied to a 10 km long field quad cable. The receiving end voltage is 7.868 V and it lags behind by 110.2°. Calculate the attenuation and phase constant of the cable, if it is properly terminated.

Solution:

$$\beta l = 110.2^\circ$$

$$\beta = \frac{110.2^\circ}{l} = \frac{110.2^\circ}{10}$$

$$= 110.2^\circ \text{ per } km = 11.02 \times \frac{\pi}{180} \text{ rad} / km$$

$$= 0.1923 \text{ rad / km}$$

$$E_R = E_s\, e^{-\alpha l}, \text{ since } Z_S = Z_R = Z_O$$

$$7.868 = 45\, e^{-\alpha \times 10}$$

$$e^{-10\alpha} = 0.1748$$

$$-10\alpha = ln\,(0.1748) = -1.743$$

$$\alpha = 0.1743 \text{ nepers / km}$$

Example 30

A 10% voltage drop across in 2 km of a uniformly loaded transmission line terminated by its characteristic impedance and there is a phase change of 20° over the same distance at a frequency of 796 Hz. Find the value of α in db/km and β rad/km.

Solution:

$$E_R = \frac{90}{100} E_s = 0.9\, E_s, \text{ since voltage drop is 10\%}$$

Tamilnadu College Of Engineering

$$\alpha\,(db) = 20\log\left[\frac{E_s}{E_R}\right]$$

$$= 20\log\left[\frac{E_s}{0.9\,E_R}\right] = 20\log\left(\frac{1}{0.9}\right)$$

$$= 20\times 0.458$$

$$= 0.916\,db \text{ for 2 km}$$

$$\text{For 1 km, } \alpha = \frac{0.916}{2}$$

$$= 0.458 \text{ db / km}$$

$$\beta l = 20^\circ$$

$$\beta = \frac{20^\circ}{l} = \frac{20^\circ}{2} = 10^\circ$$

$$= 10\times\frac{\pi}{180}\text{ rad/km} = \frac{\pi}{18}\text{ rad / km}$$

$$v = \frac{\omega}{\beta}\text{ where } \omega = 2\pi f$$

$$= \frac{2\pi\times 796}{\pi/18} = 36\times 796$$

$$= 28656 \text{ km / sec}$$

Example 31

Given the line parameters $R = 10.15\ \Omega$ / km, $L = 3.93$ mH/ Km, $G = 0.29\ \mu\mho$ / km $C = 0.0079\ \mu F$ / km. It is loaded at $\omega = 5000$ rad / sec. It is loaded with loading coil of 0.246 H and 7.3 Ω at interval of 7.88 km. Assuming the loading to be distributed find Z_0.

Solution:

$$\text{Inductance per km of loading line} = \frac{0.246}{7.88} = 0.03121\text{ H/ } km$$

Tamilnadu College Of Engineering

$$L' = 3.93\times10^{-3} + 0.03121$$

$$= 0.035148 \text{ H/km}$$

For rest loading line $= \dfrac{7.3}{7.88} = 0.9263\,\Omega/km$

$$R' = 10.15 + 0.9263$$

$$= 11.076\,\Omega/km$$

$$Z_0 = \sqrt{\frac{R' + j\omega L'}{G + j\omega C}}$$

$$= 2102.887\angle -1.595\,\Omega$$

Example 32

Express 5 nepers in decibels and 5 decibels in nepers.

Solution:

$$\alpha\ (db) = 8.686\,N = 8.686\times5 = 43.43\,db$$

Neper $\quad N = \dfrac{\alpha\,(db)}{8.686} = 0.1151\times\alpha\,(db) = 0.1151\times5$

$$N = 0.5756 \text{ nepers}$$

Example 33

A transmission line operating at 106 rad / sec has $\alpha = 8\,db/m$, $\beta = 1\,rad/m$ and $Z_0 = 60 + j\,40\Omega$ and is 2m long. If the line is connected to a source of $10\angle 0^\circ\,V$ with $Z_g = 40\,\Omega$, determine the current at the middle of the line.

Solution:

Given that $\quad \alpha = 8\,db/m = \dfrac{8}{8.686}\,N/m = 0.921\,N/m$

The propagation constant is given by

Tamilnadu College Of Engineering

$$\gamma = \alpha + j\beta = 0.921 + j1 \text{ per meter. For 2m long line}$$

$$\gamma l = (0.921 + j1)\,2 = 1.84 + j\,2$$

By trigonometric identity,

$$\tanh(a + jb) = \frac{\sin h\,2a}{\cos h\,2a + \cos 2b} + j\,\frac{\sin 2b}{\cosh 2a + \cos 2b}, \text{ then}$$

$$\tanh(1.84 + j2) = \frac{\sin h\,(2\times 1.84)}{\cos h\,(2\times 1.84) + \cos(2\times 2)} + j\,\frac{\sin(2\times 2)}{\cosh(2\times 1.84) + \cos(2\times 2)}$$

$$= \frac{\sin h\,(3.68)}{\cos h\,(3.68) + \cos(4)} + j\,\frac{\sin(4)}{\cos h\,(3.68) + \cos(4)}$$

$$= \frac{19.8105}{19.8358 - 0.6536} + j\,\frac{-0.7568}{19.8358 - 0.6536}$$

$$= 1.0327 - j\,0.0393$$

Input impedance of line is given by

$$Z_s = Z_0\left[\frac{Z_R + Z_0 \tan h\,\gamma l}{Z_0 + Z_R \tan h\,\gamma l}\right]$$

$$= (60 + j\,40)\left[\frac{(20 + j\,50) + (60 + j40)\,(1.0327 - j\,0.0393)}{(60 + j\,40) + (20 + j\,50)\,(1.0327 - j\,0.0393)}\right]$$

$$= (60 + j\,40)\left[\frac{20 + j\,50 + 61.962 - j\,2.358 + j\,41.308 + 1.572}{60 + j\,40 + 20.654 - j\,0.786 + j\,51.635 + 1.965}\right]$$

$$= (60 + j\,40)\left[\frac{83.534 + j\,88.95}{82.619 + j\,90.849}\right]$$

$$= 72.111\angle 33.69^\circ\left[\frac{122.0247\angle 46.79^\circ}{122.7983\angle 47.71^\circ}\right]$$

$$= 71.6567\angle 32.77^\circ\,\Omega = 60.25 + j\,38.785\,\Omega$$

Tamilnadu College Of Engineering

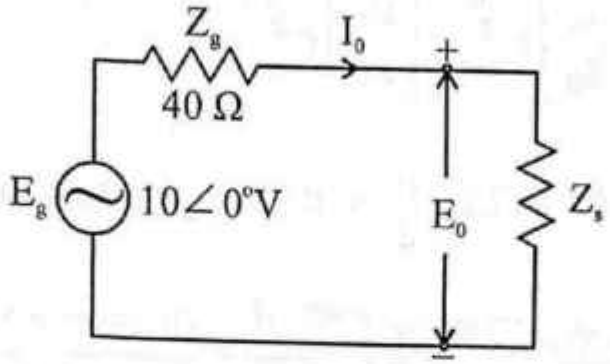

The equivalent circuit at input side is as shown in above figure,

$$I_0 = \frac{E_g}{Z_g + Z_s}$$

$$= \frac{10}{40 + 60.25 + j\,38.785} = \frac{10}{100.25 + j\,38.785}$$

$$= 93.03 \angle -21.15^\circ \; mA$$

$$E_0 = Z_s\, I_0 = (71.6567 \angle 32.77^\circ)\,(93.03 \times 10^{-3} \angle -21.15^\circ)$$

$$= 6.67 \angle 11.62^\circ \text{ V}$$

$$E_0^+ = \frac{1}{2}[E_0 + Z_0\, I_0] = \frac{1}{2}[(6.667 \angle 11.62^\circ) + \{(72.11 \angle 33.69^\circ)$$

$$(93.03 \times 10^{-3} \angle -21.15^\circ)\}]$$

$$= 6.54 + j\,1.3995 = 6.68 \angle 12.08^\circ \text{ V}$$

$$E_0^- = \frac{1}{2}[E_0 - Z_0\, I_0] = \frac{1}{2}[(6.667 \angle 11.62^\circ) + \{(72.11 \angle 33.69^\circ)$$

$$(93.03 \times 10^{-3} \angle -21.15^\circ)\}]$$

$$= -0.01 - j\,0.056 = 0.0568 \angle -100^\circ = 0.0568 \angle 260^\circ \text{ V}$$

Now of find current at the middle of lines, $Z = \frac{l}{2}$,

Tamilnadu College Of Engineering

$$I(z) = \left[\frac{E_0^+}{Z_0}\right] e^{\frac{-\gamma l}{2}} - \left[\frac{E_0^-}{Z_0}\right] e^{\frac{\gamma l}{2}}$$

But $\gamma l = 1.84 + j2$, so $\frac{\gamma l}{2} = 0.921 + j1$. Therefore

$$I(z) = \frac{(6.68\angle 12.08^\circ)e^{-0.921-j1}}{(60+j40)} - \frac{(0.0568\angle 260^\circ)e^{0.921+j1}}{(60+j40)}$$

$$= \frac{1}{60+j40}\left[6.68\,(e^{j12.08}.e^{-0.921-j1}) - 0.0568\,(e^{j260}.e^{0.921+j1})\right]$$

But $e^{j1}\,rad = e^{j57.3}$ degree. Therefore

$$= \frac{(6.68)\,e^{j12.08}.e^{-0.921}.e^{-j57.3}}{(72.111)\,e^{j33.69}} - \frac{(0.0568).e^{j260}.e^{0.921}.e^{j57.3}}{(72.111)\,e^{j33.69}}$$

$$= 0.0368\,e^{-j78.91} - 0.0019\,e^{j283.61}$$

$$= 0.0368\,[\cos 78.91 - j\sin 78.91] - \{0.0019\,[\cos 283.61 + j\sin 283.61]\}$$

$$= 35.27\angle 280^\circ\,mA$$

Example 34

Calculate the characteristic impedance, α and β of a transmission line if the following measurements have been made on the line. $Z_{oc} = 550\angle -60^\circ\ \Omega$ and $Z_{sc} = 550\angle -14^\circ\ \Omega$.

Solution:

$$Z_o = \sqrt{Z_{oc}\,Z_{sc}} = \sqrt{550\times 500\angle -60^\circ - 14^\circ}$$

$$= 524.404\angle -37^\circ\,\Omega = 418.807 - j\,315.594\,\Omega$$

$$\tan h\,\gamma = \sqrt{\frac{Z_{sc}}{Z_{oc}}} = \frac{e^{2\gamma}-1}{e^{2\gamma}+1}$$

Tamilnadu College Of Engineering

$$= \sqrt{\frac{500\angle -14}{550\angle -60^\circ}} = 0.9534\angle 23^\circ = 0.877 + j\,0.3725$$

$$\frac{e^{2\gamma}-1}{e^{2\gamma}+1} = 0.877 + j\,0.3725$$

$$e^{2\gamma}-1 = (0.877 + j\,0.3725)(e^{2\gamma}+1) = 0.877e^{2\gamma} + j\,0.3725\,e^{2\gamma} + 0.877 + j\,0.3725$$

$$e^{2\gamma}[1 - 0.877 - j\,0.3725] = 1.877 + j\,0.3725$$

$$e^{2\gamma} = \frac{1.877 + j\,0.3725}{0.123 - j\,0.3725} = \frac{1.9136\angle 11.22^\circ}{0.3922\angle -71.72^\circ}$$

$$e^{2\gamma} = 4.8791\angle 82.94^\circ$$

$$2\gamma = ln[4.8791\angle 82.94^\circ]$$

$$\gamma = \alpha + j\beta = \frac{1}{2}[ln\,4.8791 + j\,82.94^\circ], \text{ since } ln[a\angle b] = ln\,a + jb$$

$$= \frac{1}{2}ln\,4.8791 + j\left(\frac{82.94^\circ}{2}\right)$$

$$= 0.7924 + j\,0.7237$$

$$\alpha = 0.7924 \text{ nepers / km}$$

$$\beta = 0.7237 \text{ rad / km}$$

Tamilnadu College Of Engineering

UNIT 2

HIGH FREQUENCY TRANSMISSION LINES

2.1 INTRODUCTION

For the radio frequency line of either open wire type or coaxial line type working at a frequency of the range of megahertz and more, the following standard assumptions are made

i) The current flowing on only conductor surface and internal inductance becomes zero due to consideration of skin effect.

ii) $\omega L >> R$.

iii) Conductance $G = 0$.

The analysis of high frequency transmission line is made in either of two ways, depending on whether R is merely small with respect to ωL (small dissipation) and R may be considered negligible completely (zero dissipation).

2.2 TRANSMISSION LINES AT RADIO FREQUENCIES

There are two main forms of line at high frequency, namely

(i) Open wire line

(ii) Coaxial line

The parameters of the high frequency lines are different in open wire line and coaxial line.

2.2.1 Parameters of an Open Wire Line at High Frequencies

At high frequencies, the skin effect is dominant and hence the current flows only on surface of the conductor. Thus internal inductance reduce to zero. The inductance of an open wire line is given by,

Tamilnadu College Of Engineering

$$L = \frac{\mu_0}{2\pi} ln \frac{d}{a} \text{ H}/m = 4\times10^{-7} \ln\frac{d}{a} \text{H}/m = 9.21\times10^{-7} \log\frac{d}{a} \text{H}/m$$

The value of capacitance of a line not affected by skin effect. The capacitance of an open wire line is given by,

$$C = \frac{\pi\varepsilon}{ln\frac{d}{a}} \text{ F}/m = \frac{22.7\times10^{-12}}{\ln\frac{d}{a}}\times10^{-12} \text{ F}/m = \frac{12.07}{\log\frac{d}{a}}\times10^{-12} \text{ F}/m$$

The effective cross section of conductor is given by,

$$\delta = \frac{1}{\sqrt{\pi f \mu\sigma}} \; m$$

For direct current, the resistance of a round conductor with radius a is given by,

$$R_{dc} = \frac{K}{\pi a^2} \text{ where } K = 1/\sigma$$

Similarly, for alternating current flowing in skin thickness δ, the radius a of round conductor is given by,

$$R_{ac} = \frac{K}{2\pi a\delta} \; \Omega/m$$

Then $\frac{R_{ac}}{R_{dc}} = \frac{a\sqrt{\pi f \mu\sigma}}{2}$

At high frequency, the characteristic impedance of open wire line is given by

$$R_0 = \sqrt{\frac{L}{C}} = 120 \, ln \frac{d}{a} \Omega$$

$$R_0 = \sqrt{\frac{L}{C}} = 276 \log\frac{d}{a} \Omega$$

Tamilnadu College Of Engineering

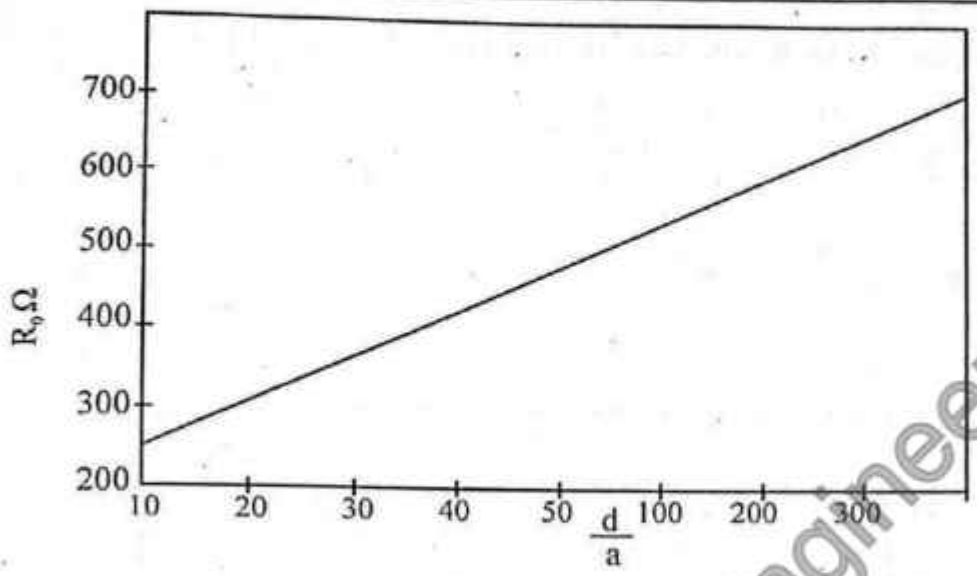

Figure 2.1 Variation of R_0 for an open wire line

The variation of R_0 with $\frac{d}{a}$ ratio for an open wire line in figure 2.1. The proximity effect has been neglected here, so that these expressions become less exact for $\frac{d}{a}$ less than 10.

2.2.2 Parameters of the Coaxial Line at High Frequencies

The value of inductance of coaxial line is given by,

$$L = \frac{\mu}{2\pi} ln \frac{b}{a} \text{ H}/m = 2\times10^{-7} \ln\frac{b}{a} \text{H}/m = 4.6\times10^{-7} \log\frac{b}{a} \text{H}/m$$

The value of capacitance of coaxial line is given by,

$$C = \frac{2\pi\varepsilon}{ln\frac{b}{a}} F/m = \frac{55.5\varepsilon_r}{\ln\frac{b}{a}} \mu\text{F}/m = \frac{24.14\varepsilon_r}{\log\frac{b}{a}} \mu\text{F}/m$$

The ac resistance of the coaxial line is given by,

$$R_{ac} = 4.16\times10^{-8}\sqrt{f}\left(\frac{1}{b}+\frac{1}{a}\right)\Omega/m$$

The dc resistance of the coaxial line is given by

$$R_{dc} = \frac{1}{\pi\sigma}\left[\frac{1}{a^2}+\frac{1}{(c^2-b^2)}\right]\Omega/m$$ where C is outer radias of outer conductor

Tamilnadu College Of Engineering

At high frequency, the characteristic impedance of coaxial line is given by

$$R_0 = \sqrt{\frac{L}{C}} = \frac{60}{\sqrt{\varepsilon_r}} ln \frac{b}{a} \Omega$$

$$R_0 = \sqrt{\frac{L}{C}} = \frac{138}{\sqrt{\varepsilon_r}} \log \frac{b}{a} \Omega$$

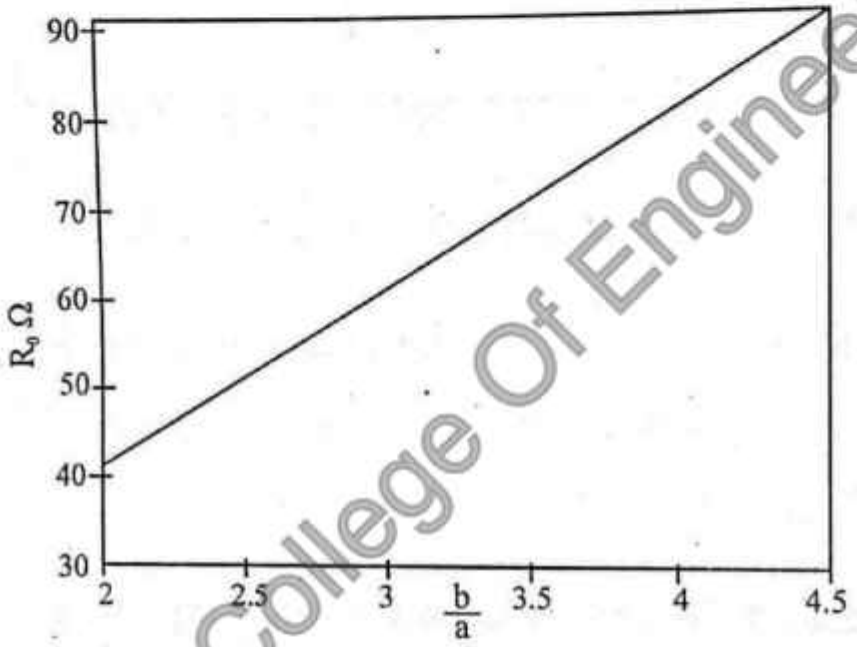

Figure 2.2 Variation of R_0 for a coaxial line

The value of ε_r being 1 for air spaced line. The variation of R_0 with $\frac{b}{a}$ ratio for a coaxial line is shown in figure 2.2.

At high frequency, the optimum design consideration for an open wire line and a coaxial cable are given in table 2.1.

Table 2.1 Optimum design consideration for open wire and coaxial line

Parameters	Open wire line		Coaxial	
	$\frac{d}{a}$	R_0	$\frac{b}{a}$	R_0
Minimum attenuation	3.6	154	3.6	77
Maximum resonant impedance	8	250	9.2	133
Maximum quality factor	3.6	154	3.6	77
Maximum voltage breakdown	5.4	202	2.7	60
Maximum power transfer	–	–	1.6	30

Tamilnadu College Of Engineering

2.3 LINE OF ZERO DISSIPATION

In case of zero dissipation line R = G = 0 then the line parameters for the line of zero dissipation are

$$Z = j\omega L$$

$$Y = j\omega C$$

The characteristic impedance becomes,

$$Z_o = \sqrt{\frac{Z}{Y}} = \sqrt{\frac{j\omega L}{j\omega C}} = \sqrt{\frac{L}{C}}$$

As the value of characteristic impedance is pure resistive, therefore

$$Z_o = R_o = \sqrt{\frac{L}{C}}\ \Omega$$

The propagation constant is given by,

$$\gamma = \alpha + j\beta = \sqrt{ZY} = \sqrt{(j\omega L)\,(j\omega C)}$$

$$= \sqrt{-\omega^2 LC} = j\omega\sqrt{LC}$$

Equating real and imaginary parts,

$$\alpha = 0 \text{ and } \beta = \omega\sqrt{LC}\ rad/m$$

The velocity of propagation is given by

$$v = \frac{\omega}{\beta} = \frac{1}{\sqrt{LC}}\ \text{m/s}$$

The secondary parameters for different types of transmission line are shown in table 2.2

Tamilnadu College Of Engineering

Table 2.2 Propagation parameters for different types of lines

Parameters	General transmission line	Dissipationless line or lossless line	Distortionless line
γ	$\sqrt{(R + j\omega L)(G + j\omega C)}$	$j\omega\sqrt{LC}$	$\sqrt{RG} + j\omega\sqrt{LC}$
Z_0	$\sqrt{\dfrac{R + j\omega L}{G + j\omega C}}$	$\sqrt{\dfrac{L}{C}}$	$\sqrt{\dfrac{L}{C}}$ or $\sqrt{\dfrac{R}{G}}$
α	$\left[\dfrac{1}{2}(RG - \omega^2 LC) + \sqrt{(R^2 + \omega^2 L^2)}\sqrt{(G^2 + \omega^2 C^2)}\right]^{\frac{1}{2}}$	0	$\sqrt{\dfrac{R}{G}}$
β	$\left[\dfrac{1}{2}(\omega^2 LC - RG) + \sqrt{(R^2 + \omega^2 L^2)}\sqrt{(G^2 + \omega^2 C^2)}\right]^{\frac{1}{2}}$	$\omega\sqrt{LC}$	$\omega\sqrt{LC}$
v	$\dfrac{\omega}{\beta}$	$\dfrac{1}{\sqrt{LC}}$	$\dfrac{1}{\sqrt{LC}}$

Tamilnadu College Of Engineering

2.4 VOLTAGE AND CURRENT ON THE DISSIPATIONLESS LINE

The voltage and current at any point on the transmission line are

$$E = \frac{E_R(Z_R + Z_o)}{2Z_R}\left[e^{\gamma s} + \frac{Z_R - Z_o}{Z_R + Z_o}e^{-\gamma s}\right]$$

$$I = \frac{I_R(Z_R + Z_o)}{2Z_o}\left[e^{\gamma s} - \frac{Z_R - Z_o}{Z_R + Z_o}e^{-\gamma s}\right]$$

For the line of zero dissipation $\alpha = 0, \gamma = j\beta$ and $Z_o = R_o$

$$E = \frac{E_R(Z_R + R_o)}{2Z_R}\left[e^{j\beta s} + \frac{Z_R - R_o}{Z_R + R_o}e^{-j\beta s}\right]$$

$$I = \frac{I_R(Z_R + R_o)}{2R_o}\left[e^{j\beta s} - \frac{Z_R - R_o}{Z_R + R_o}e^{-j\beta s}\right]$$

The term varying with $e^{j\beta s}$ produces incident wave from the source towards the load and the term varying with $e^{-j\beta s}$ produces reflected wave moving from load back towards the source. The actual voltage or current at any point on the line is the sum of the incident and reflected wave voltage or current at that point. The resultant total voltage or current wave appears to stand still on line, oscillating in magnitude with time but having fixed position of maxima and minima as shown in figure 2.3. Such a wave is known as **'standing wave'.**

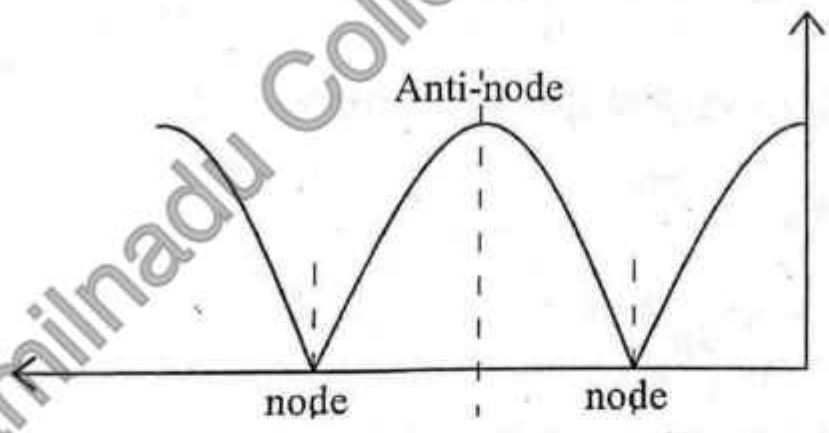

Figure 2.3 Standing wave

Alternatively, voltage and current in hyperbolic form are

$$E = E_R \cosh \gamma s + I_R Z_o \sinh \gamma s$$

$$I = I_R \cosh \gamma s + \frac{E_R}{Z_o}\sinh \gamma s$$

For a line zero dissipation $\alpha = 0$, $\gamma = j\beta$ and $Z_o = R_o$

Tamilnadu College Of Engineering

$$E = E_R \cosh(j\beta s) + I_R R_o \sinh(j\beta s)$$

$$I = I_R \cosh(j\beta s) + \frac{E_R}{R_o}\sin(j\beta s)$$

But $\cosh j\omega = \dfrac{e^{j\omega}+e^{-j\omega}}{2} = \cos\omega$ and $\sin j\omega = \dfrac{e^{j\omega}+e^{-j\omega}}{2} = j\sin\omega$

Then $E = E_R \cos\beta s + j\, I_R R_o \sin\beta s$

$$I = I_R \cos\beta s + j\frac{E_R}{R_o}\sin\beta s$$

But $\beta = \dfrac{2\pi}{\lambda}$

The voltage and current at any point on a dissipationless line are

$$E = E_R \cos\frac{2\pi s}{\lambda} + j\, I_R R_o \sin\frac{2\pi s}{\lambda}$$

$$I = I_R \cos\frac{2\pi s}{\lambda} + j\frac{E_R}{R_o}\sin\frac{2\pi s}{\lambda}$$

If the line is open circuited $I_R = 0$. Therefore

$$E_{oc} = E_R \cos\frac{2\pi s}{\lambda}$$

$$I_{oc} = j\frac{E_R}{R_o}\sin\frac{2\pi s}{\lambda}$$

The voltage and current waves are in quadrature everywhere as shown in figure 2.4.

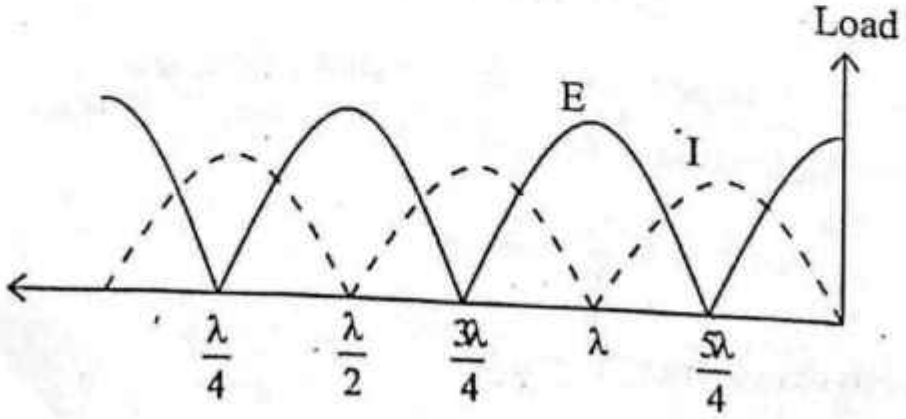

Figure 2.4 Open circuited line

Tamilnadu College Of Engineering

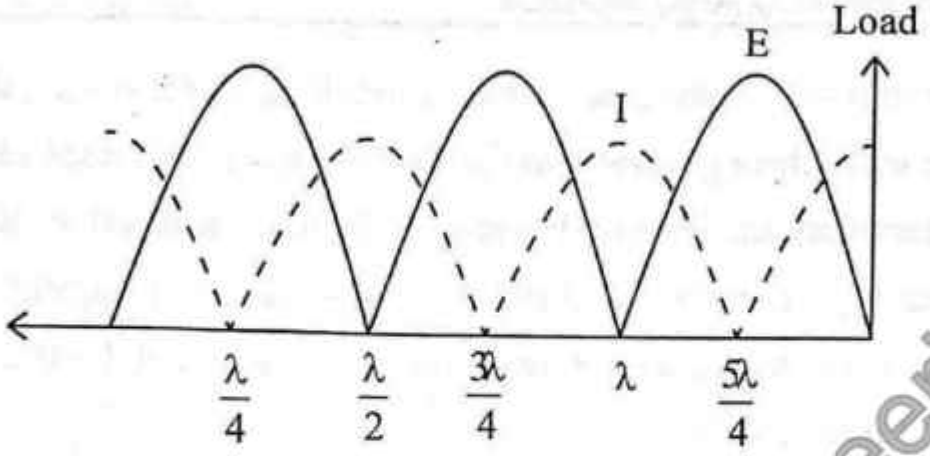

Figure 2.5 Short circuited line

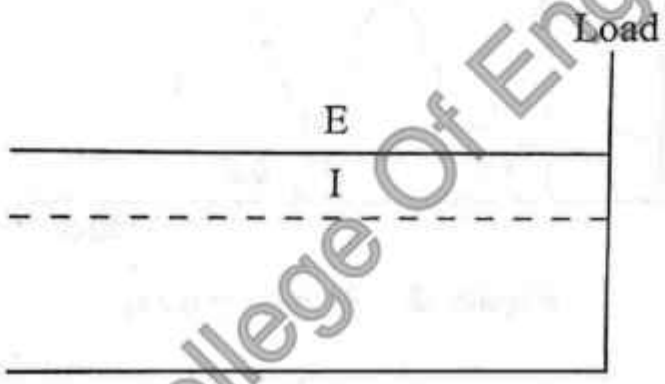

Figure 2.6 $Z_R = R_0$

If the line is short circuited . Therefor $E_R = 0$. Therefore

$$E_{sc} = j\, I_R\, R_o \sin \frac{2\pi s}{\lambda}$$

$$I_{sc} = I_R \cos \frac{2\pi s}{\lambda}$$

The magnitudes of voltage and current distribution is shown in figure 2.5.

If $Z_R = R_o$, the reflection coefficient $K = \dfrac{Z_R - R_o}{Z_R + R_o} = 0$. Then the reflected wave becomes zero. The voltage and current of the line can be expressed by,

$$E = E_R\, e^{j\beta s} \text{ and } I = I_R\, e^{j\beta s}$$

Such voltage or current can be represented by straight line as shown in figure 2.6.

Tamilnadu College Of Engineering

2.5 STANDING WAVES AND NODES

When the transmission line is not correctly terminated $(Z_R \neq R_0)$, the travelling electromagnetic wave from generator at the sending end is reflected completely or partially at the termination. The combination of incident and reflected wavse give rise to interference phenomenon and thus standing waves of current and voltage along the line, with definite maxima and minima of current and voltage along the line as shown in figure 2.7.

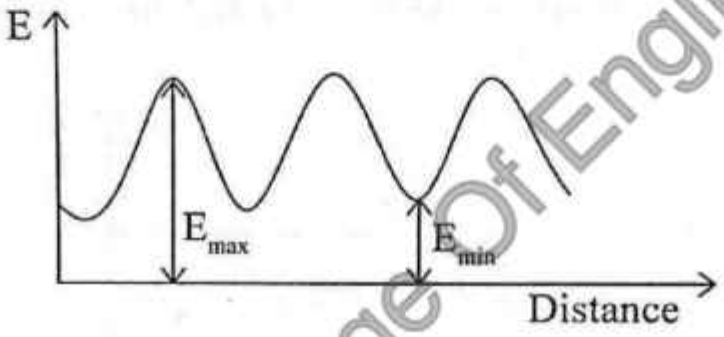

Figure 2.7 Standing wave

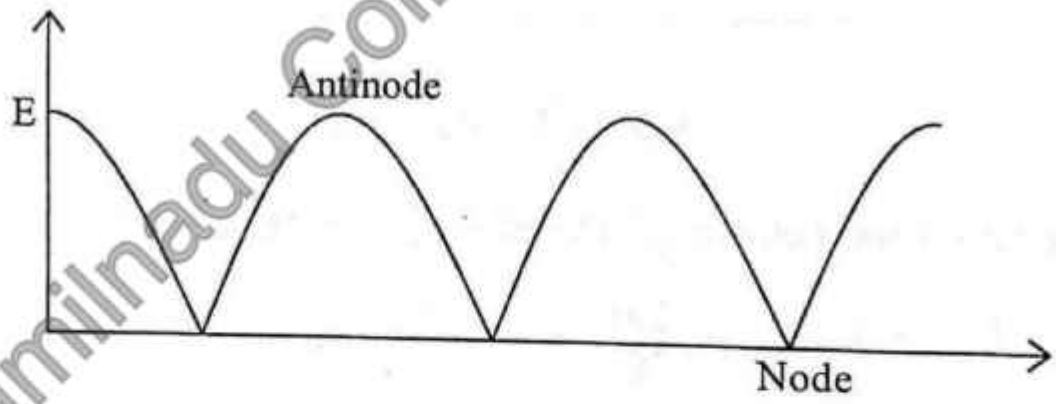

Figure 2.8 Standing waves on open or shorted line

The point along the line where magnitude of voltage or current is zero are called '**Nodes**' while the point along the line where magnitude of voltage or current is maximum are called '**Antinodes or loops**'. This is shown in figure 2.8. When a line is terminated in R_0 $(Z_R = R_0)$ the standing wave are absent, such a line is called **'smooth line'.**

Tamilnadu College Of Engineering

2.6 STANDING WAVE RATIO

The ratio of the maximum to minimum magnitudes of voltage or current on a line have standing wave is called standing wave ratio. It is denoted by S.

$$S = \left|\frac{E_{max}}{E_{min}}\right| = \left|\frac{I_{max}}{I_{min}}\right|$$

The ratio of E_{max} to E_{min} is referred as voltage standing wave ratio (VSWR). Similarly the ratio of I_{max} to I_{min} is referred as current standing wave ratio (ISWR). Theoretically the value of S lies between 1 and ∞.

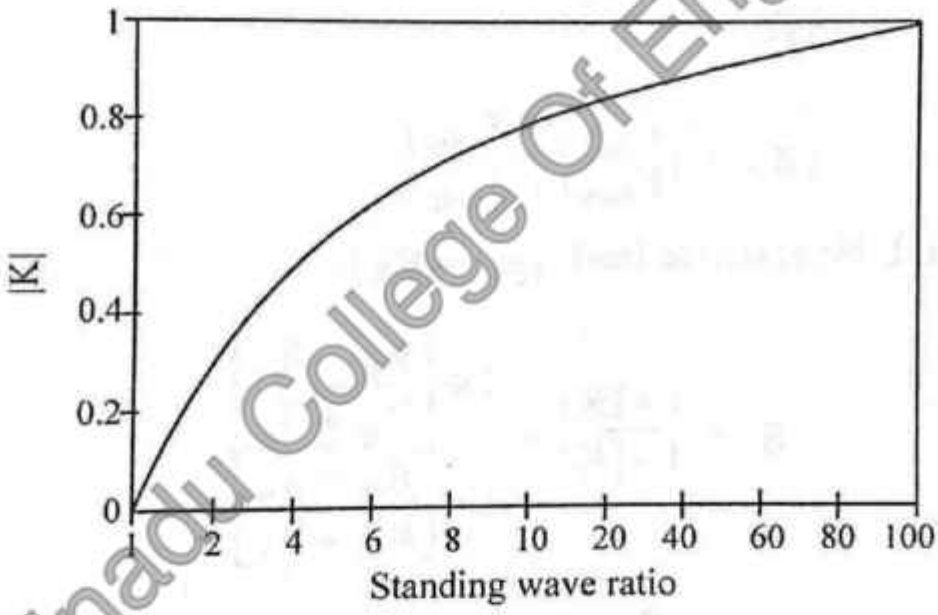

Figure 2.9 Relation between S and |K|

The relation between the standing wave ratio and the magnitude of the reflection coefficient is shown in figure 2.9.

The voltage at any point on the dissipation line is given by,

$$E = \frac{E_R(Z_R + R_o)}{2Z_R}\left[e^{j\beta s} + Ke^{-j\beta s}\right] \text{ where } K = \frac{Z_R - R_o}{Z_R + R_o}$$

At maximum magnitude of voltage, the incident and reflected wave are in phase. Therefore

$$E_{max} = \frac{E_R(Z_R + R_o)}{2Z_R}\left[1 + |K|\right]$$

Tamilnadu College Of Engineering

At minimum magnitude of voltage, the incident and reflected waves are out of phase. Therefore

$$E_{min} = \frac{E_R(Z_R + R_o)}{2Z_R}\,[1 - |K|]$$

Then
$$S = \left|\frac{E_{max}}{E_{min}}\right| = \frac{1+|K|}{1-|K|}$$

$$S(1-|K|) = 1+|K|$$
$$S\,|K| + |K| = S-1$$
$$|K|\,(S+1) = S-1$$
$$|K| = \frac{S-1}{S+1}$$
$$|K| = \frac{|E_{max}| - |E_{min}|}{|E_{max}| + |E_{min}|}$$

In general, for resistive load $(Z_R = R_R)$,

$$S = \frac{1+|K|}{1-|K|} = \frac{1+\left[\dfrac{R_R - R_o}{R_R + R_o}\right]}{1-\left[\dfrac{R_R - R_o}{R_R + R_o}\right]}$$

$$S = \frac{R_R}{R_o}\ (for\ R_R > R_o)$$

$$S = \frac{R_o}{R_R}\ (for\ R_o > R_R)$$

2.7 INPUT IMPEDANCE OF THE DISSIPATIONLESS LINE

The equation for voltage and current on the dissipationless line are

$$E_s = \frac{E_R(Z_R + R_o)}{2Z_R}\,[e^{j\beta s} + Ke^{-j\beta s}]$$

$$I_s = \frac{I_R(Z_R + R_o)}{2R_o}\,[e^{j\beta s} - Ke^{-j\beta s}]$$

or

Tamilnadu College Of Engineering

$$E_s = E_R \cos\beta s + j I_R R_o \sin\beta s$$

$$I_s = I_R \cos\beta s + j \frac{E_R}{R_o} \sin\beta s$$

The input impedance of a line is defined as the ratio of sending end voltage to the sending end current. Therefore

$$Z_s = \frac{E_s}{I_s} = \frac{\dfrac{E_R(Z_R + R_o)}{2Z_R}[e^{j\beta s} + Ke^{-j\beta s}]}{\dfrac{I_R\,(Z_R + R_o)}{2R_o}[e^{j\beta s} - Ke^{-j\beta s}]}$$

But $\quad E_R = I_R Z_R$

Then
$$Z_s = \frac{\dfrac{I_R\,(Z_R + R_o)}{2}[e^{j\beta s} + Ke^{-j\beta s}]}{\dfrac{I_R\,(Z_R + R_o)}{2R_o}[e^{j\beta s} - Ke^{-j\beta s}]}$$

$$Z_s = R_o \frac{[e^{j\beta s} + Ke^{-j\beta s}]}{[e^{j\beta s} - Ke^{-j\beta s}]}$$

$$Z_s = R_o \left[\frac{1\angle\beta s + |K|\angle\phi - \beta s}{1\angle\beta s - |K|\angle\phi - \beta s}\right]$$

Where ϕ is the angle of reflection coefficient K . Dividing both numerator and denominator by $1 \angle \beta s$,

$$Z_s = R_o \left[\frac{1 + |K|\angle\phi - 2\beta s}{1 - |K|\angle\phi - 2\beta s}\right] \quad \text{... (1)}$$

The input impedance is maximum at a distance $s = \dfrac{\phi}{2\beta}$ and also resistive. Therefore equation (1) becomes

$$R_{max} = R_0 \left[\frac{1 + |K|}{1 - |K|}\right] = SR_0$$

Tamilnadu College Of Engineering

The input impedance (resistive) is minimum at a distance $S = \frac{\phi + \pi}{2\beta}$.

Therefore equation (1) becomes

$$R_{min} = R_0 \left[\frac{1+|K|\angle -\pi}{1-|K|\angle -\pi}\right] = R_0 \left[\frac{1-|K|}{1+|K|}\right]$$

$$= \frac{R_0}{S}$$

Similarly $$Z_s = \frac{E_s}{I_s} = \frac{E_R \cos\beta s + j I_R R_o \sin\beta s}{I_R \cos\beta s + j \frac{E_R}{R_o} \sin\beta s}$$

But $$E_R = I_R Z_R$$

$$Z_s = R_o \left[\frac{Z_R + j R_o \tan\beta s}{R_o + j Z_R \tan\beta s}\right]$$

Input impedance of a transmission line for different cases are given in table 2.3

Table 2.3 Input impedance for different loads.

Type of line	Input impedance Z_s
General transmission line (Lossy line)	$Z_0 \left[\frac{Z_R + Z_0 \tan h\, \gamma l}{Z_0 + Z_R \tan h\, \gamma l}\right]$
Dissipationless line (Lossless line)	$R_0 \left[\frac{Z_R + j R_0 \tan \beta s}{R_0 + j Z_R \tan \beta s}\right]$
Lossy line with shorted load ($Z_R = 0$)	$Z_0 \tan h\, \gamma l$
Lossy line with open circuited load ($Z_R = \infty$)	$Z_0 \cot h\, \gamma l$
Lossy line with matched load ($Z_R = Z_0$)	Z_0
Lossless line with shorted load	$j R_0 \tan \beta s$
Lossless line with open circuited load	$-j R_0 \cot \beta s$
Lossless line with matched load	Z_0

Tamilnadu College Of Engineering

2.8 OPEN AND SHORT CIRCUITED LINE

The input impedance of a dissipationless line is given by,

$$Z_s = R_o\left[\frac{Z_R + jR_o \tan\beta s}{R_o + j\,Z_R \tan\beta s}\right] = R_o\left[\frac{1 + j\,\dfrac{R_o}{Z_R}\tan\beta s}{\dfrac{R_o}{Z_R} + j\tan\beta s}\right]$$

For a short circuited line, $Z_s = Z_{sc}$ and $Z_R = 0$,

$$Z_{sc} = R_o\left[\frac{j\dfrac{R_o}{Z_R}\tan\beta s}{\dfrac{R_o}{Z_R}}\right]$$

$$Z_{sc} = jR_o \tan\beta s \qquad \text{... (1)}$$

For an open circuited line, $Z_s = Z_{oc}$ and $Z_R = \infty$,

$$Z_{oc} = R_o\left[\frac{1}{j\tan\beta s}\right] \text{ where } \frac{1}{\infty} = 0$$

$$Z_{oc} = -jR_o \cot\beta s \qquad \text{... (2)}$$

Multiplying equation (1) and (2)

$$R_o = \sqrt{Z_{sc}\,Z_{oc}}$$

For a short circuited line $\dfrac{Z_{sc}}{R_0} = \tan\beta s = \tan\left[\dfrac{2\pi s}{\lambda}\right]$ (purely reactive)

When $s = 0,\ \tan\left[\dfrac{2\pi}{\lambda}\times 0\right] = 0,\ \dfrac{Z_{sc}}{R_0} = 0$

$$s = \frac{\lambda}{4}, \tan\left[\frac{2\pi}{\lambda}\times\frac{\lambda}{4}\right] = \tan\left[\frac{\pi}{2}\right] = \infty,\ \frac{Z_{sc}}{R_0} = \infty$$

$$s = \frac{\lambda}{2}, \tan\left[\frac{2\pi}{\lambda}\times\frac{\lambda}{2}\right] = \tan[\pi] = 0,\ \frac{Z_{sc}}{R_0} = 0$$

Tamilnadu College Of Engineering

$$s = \frac{3\lambda}{4}, \tan\left[\frac{2\pi}{\lambda} \times \frac{3\lambda}{4}\right] = \tan\left[\frac{3\pi}{2}\right] = \infty, \ \frac{Z_{sc}}{R_0} = \infty$$

$$s = \lambda, \tan\left[\frac{2\pi}{\lambda} \times \lambda\right] = \tan[2\pi] = 0, \ \frac{Z_{sc}}{R_0} = 0$$

For an open circuited line $\frac{Z_{oc}}{R_0} = -\cot \beta s = -\cot\left[\frac{2\pi s}{\lambda}\right]$ (purely reactive)

When $s = 0, \cot\left[\frac{2\pi}{\lambda} \times 0\right] = \cot[0] = \infty, \frac{Z_{oc}}{R_0} = \infty$

$$s = \frac{\lambda}{4}, \cot\left[\frac{2\pi}{\lambda} \times \frac{\lambda}{4}\right] = \cot\left[\frac{\pi}{2}\right] = 0, \frac{Z_{oc}}{R_0} = 0$$

$$s = \frac{\lambda}{2}, \cot\left[\frac{2\pi}{\lambda} \times \frac{\lambda}{2}\right] = \cot[\pi] = \infty, \frac{Z_{oc}}{R_0} = \infty$$

$$s = \frac{3\lambda}{4}, \cot\left[\frac{2\pi}{\lambda} \times \frac{3\lambda}{4}\right] = \cot\left[\frac{3\pi}{2}\right] = 0, \ \frac{Z_{oc}}{R_0} = 0$$

$$s = \lambda, \cot\left[\frac{2\pi}{\lambda} \times \lambda\right] = \cot[2\pi] = \infty, \ \frac{Z_{oc}}{R_0} = \infty$$

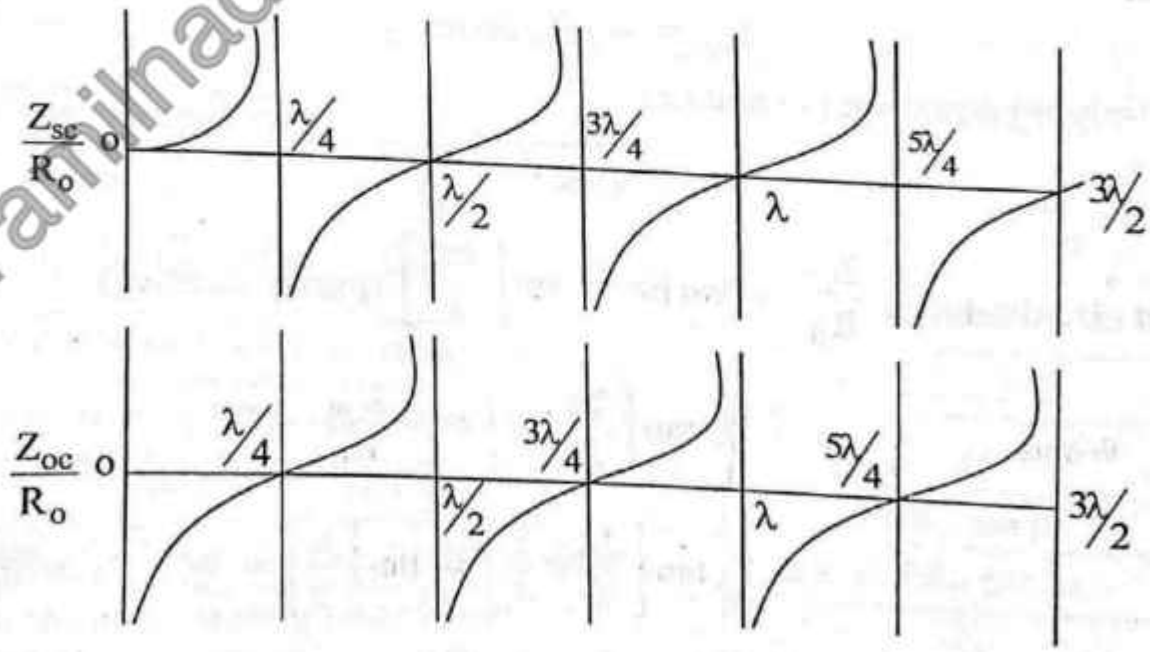

Figure 2.10 Variation of input impedance of short and open circuited line

Tamilnadu College Of Engineering

The variation of input impedance of dissipationless line due to open and short circuited line is shown is figure 2.10.

The input impedance of either an open or short circuited line is a pure reactance, For the first quarter wavelength, a short circuited line acts as an inductance, whereas an open circuited line acts as a capacitance.

2.9 POWER AND IMPEDANCE MEASUREMENT ON LINES

The equation for voltage and current on the dissipationless line are, 2.17 3.5

$$E = \frac{I_R(Z_R + R_o)}{2}[1 + |K| \angle \phi - 2\beta s]$$

$$I = \frac{I_R(Z_R + R_o)}{2R_o}[1 - |K| \angle \phi - 2\beta s]$$

The voltage and current phasors are shown in figure 2.11. The phasors A and B being proportional to E and I respectively.

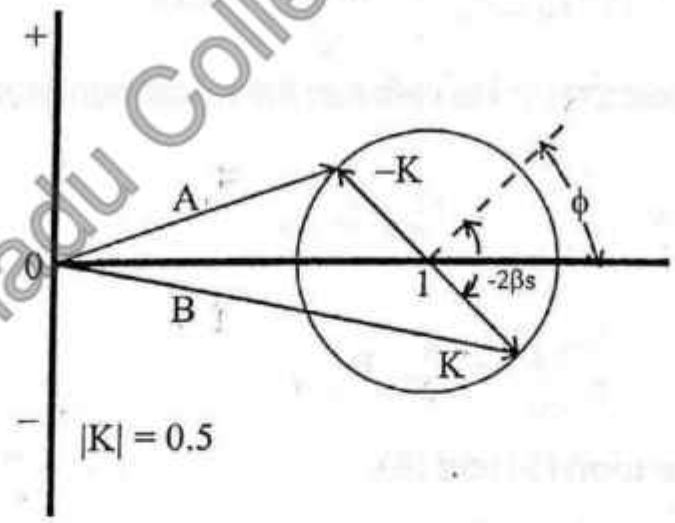

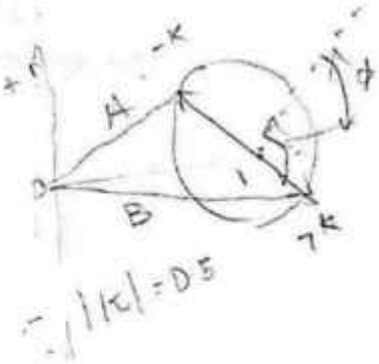

Figure 2.11 Phasor diagram

At maximum voltage and current, the incident and reflected waves are in phase. Therefore

$$E_{max} = \frac{I_R(Z_R + R_o)}{2}[1 + |K|] \quad \text{... (1)}$$

$$I_{max} = \frac{I_R(Z_R + R_o)}{2R_o}[1 + |K|] \quad \text{... (2)}$$

Tamilnadu College Of Engineering

At minimum voltage and current, the incident and reflected waves are out of phase. Therefore

$$E_{min} = \frac{I_R\,(Z_R + R_o)}{2}\,[1 - |K|] \qquad \text{... (3)}$$

$$I_{min} = \frac{I_R\,(Z_R + R_o)}{2R_o}\,[1 - |K|] \qquad \text{... (4)}$$

Dividing the equation (1) by (2) and (3) by (4),

$$\frac{E_{max}}{I_{max}} = \frac{E_{min}}{I_{min}} = R_o$$

Dividing the equation (1) by (4),

$$\frac{E_{max}}{I_{min}} = R_o\left[\frac{1+|K|}{1-|K|}\right] = SR_o = R_{max}$$

Dividing the equation (2) by (3),

$$\frac{E_{min}}{I_{max}} = R_o\left[\frac{1-|K|}{1+|K|}\right] = \frac{R_o}{S} = R_{min}$$

The power can be expressed as both maximum and minimum voltage and current as

$$P = \frac{E_{max}^2}{R_{max}} = I_{max}^2\,R_{max} \qquad \text{... (5)}$$

$$P = \frac{E_{min}^2}{R_{min}} = I_{min}^2\,R_{min} \qquad \text{... (6)}$$

Multiplying equation (5) and (6),

$$P^2 = \frac{E_{max}^2\,E_{min}^2}{R_{max}R_{min}} = \frac{E_{max}^2 E_{min}^2}{(SR_o)\left(\frac{R_o}{S}\right)}$$

$$P = \frac{|E_{max}|\,|E_{min}|}{R_o} \text{ Watts}$$

Power interms of current can be expressed as,

$$P = \left(|I_{max}|\,|I_{min}|\right)R_o \text{ Watts}$$

Tamilnadu College Of Engineering

Measurement of Unknown Impedance

The unknown value of a load impedance Z_R connected to a transmission line may be determined by standing wave measurements on the open wire line. Here the characteristic impedance (R_0) is known and SWR measured at distance s' from the load to nearest voltage minimum.

At voltage minimum $\quad Z_s = R_{min} = \dfrac{R_o}{S}$

The input impedance of a line at any point is given by,

$$Z_s = R_o \left[\frac{Z_R + j\,R_o \tan\left(\frac{2\pi s}{\lambda}\right)}{R_o + j\,Z_R \tan\left(\frac{2\pi s}{\lambda}\right)} \right] \text{ where } \beta = \frac{2\pi}{\lambda}$$

The point of voltage minimum at a distance s' from the load is,

$$\frac{R_o}{S} = R_o \left[\frac{Z_R + j R_o \tan\left(\frac{2\pi s'}{\lambda}\right)}{R_o + j\,Z_R \tan\left(\frac{2\pi s'}{\lambda}\right)} \right]$$

$$R_o + j Z_R \tan\left(\frac{2\pi s'}{\lambda}\right) = S\left[Z_R + j\,R_o \tan\left(\frac{2\pi s'}{\lambda}\right) \right]$$

$$R_o - Sj R_o \tan\left(\frac{2\pi s'}{\lambda}\right) = S\,Z_R - j\,Z_R \tan\left(\frac{2\pi s'}{\lambda}\right)$$

$$R_o \left[1 - j\,S \tan\left(\frac{2\pi s'}{\lambda}\right) \right] = Z_R \left[S - j \tan\left(\frac{2\pi s'}{\lambda}\right) \right]$$

$$Z_R = R_o \left[\frac{1 - jS \tan\left(\frac{2\pi s'}{\lambda}\right)}{S - j \tan\left(\frac{2\pi s'}{\lambda}\right)} \right]$$

Tamilnadu College Of Engineering

2.10 REFLECTION LOSSES

When the line is not matched to the load ($Z_R \neq R_o$) , then the reflection losses present in the line.

The voltage at a maximum point is due to the inphase sum of the incident and reflected waves. Therefore

$$|E_{max}| = |E_i| + |E_r| = \frac{I_R\,(Z_R + R_o)}{2}\,[1 + |K|]$$

The minimum voltage is due to the out of phase difference of the incident and reflected waves. Therefore

$$|E_{min}| = |E_i| - |E_r| = \frac{I_R\,(Z_R + R_o)}{2}\,[1 - |K|]$$

Hence the standing wave ratio is,

$$S = \frac{|E_{max}|}{|E_{min}|} = \frac{|E_i| + |E_r|}{|E_i| - |E_r|}$$

The total power transmitted along the line and delivered to the load is,

$$P = \frac{|E_{max}|\,|E_{min}|}{R_o} = \frac{(|E_i| + |E_r|)(|E_i| - |E_r|)}{R_o}$$

$$= \frac{|E_i|^2 - |E_r|^2}{R_o}$$

Therefore $P = P_i - P_r$

Where P_i is the incident wave power and P_r is the reflected wave power. The ratio of the power (P) delivered to the load to incident wave power is,

$$\frac{P}{P_i} = \frac{P_i - P_r}{P_i} = \frac{|E_i|^2 - |E_r|^2}{|E_i|^2}$$

Tamilnadu College Of Engineering

$$= 1 - \frac{|E_r|^2}{|E_i|^2} = 1 - |K|^2$$

But $$K = \frac{S-1}{S+1}$$

Therefore $$\frac{P}{P_i} = 1 - \left(\frac{S-1}{S+1}\right)^2 = \frac{(S+1)^2 - (S-1)^2}{(S+1)^2} = \frac{4S}{(S+1)^2}$$

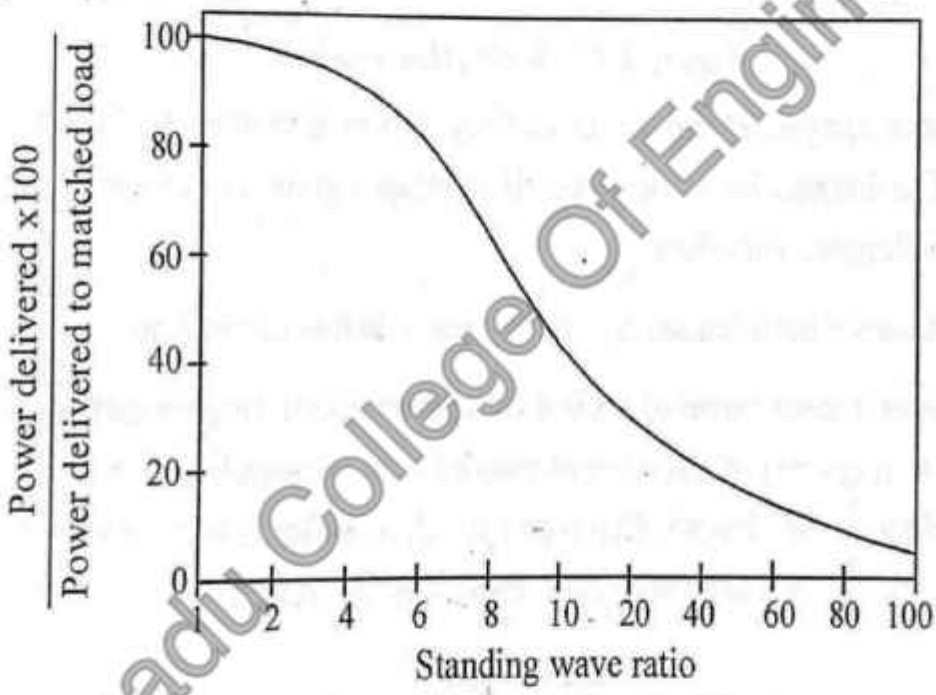

Figure 2.12 Reflection losses as a function of S

The ratio of power absorbed by the load to the power transmitted is plotted as a function of standing wave ratio is shown in figure 2.12

2.11 MEASUREMENT OF VSWR AND WAVELENGTH

The measurement of VSWR and wavelength of singnal in coaxial line using slotted line method, it is necessary to use a length of line is one half wavelength or more long has been cut as shown in figure 2.13.

A wire probe is inserted into air dielectric of the line and it connected to a vacuum tube voltmeter. This voltmeter acts as an indicator. The indicator determine the value of VSWR directly.

Tamilnadu College Of Engineering

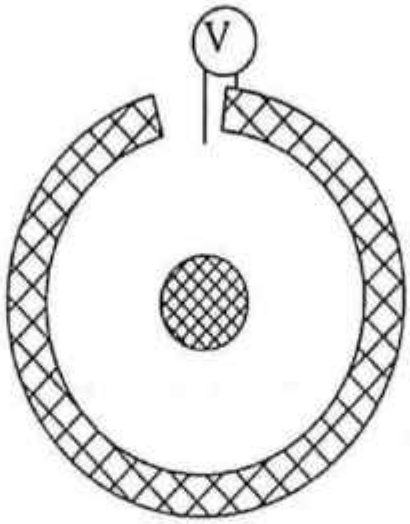

Figure 2.13 Slotted line method

The same equipment and technique may also used to measure the wavelength of the line. The distance between successive voltage maxima or minima being equal to a half wavelength. Therefore,

$\frac{\lambda}{2}$ = Distance between successive voltage maxima or minima.

The direct measurement of VSWR using directional coupler method is shown in figure 2.14. It consist of a section of coaxial transmission line, having two small holes spaced by $\frac{1}{4}$ wavelength. Clamped over these holes is a small section of line terminated in its R_0 value at both ends to prevent reflections.

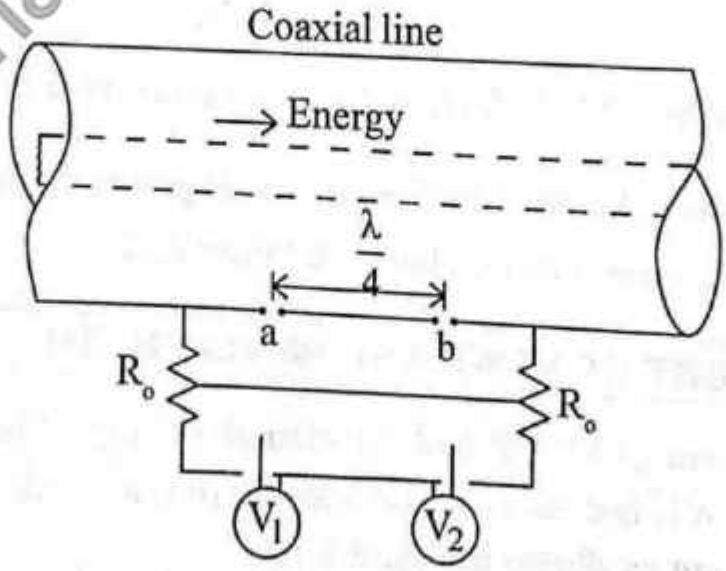

Figure 2.14 Directional coupler method

Tamilnadu College Of Engineering

If the main line is transmitting energy to the right, then a wave entering the secondary line through hole 'a' and traveling to the right will be inphase with wave entering at hole b, setting up a wave traveling to the right in the secondary line. It give an indication on V_2 but not will it give an indication on V_1. Energy entering hole 'a' and traveling to the left will be out of phase and will cancel the wave which entered at b.

In a similar manner, a wave in the main line traveling to the left will give an indication on V_1 but not on V_2.

In the mainline, the wave to the right (indication on V_2) might be an incident wave, and that to the left (indication on V_1) a reflected wave. The ratio of the indications of V_1 and V_2 will therefore be the ratio of incident to reflected wave in the main line.

The reflection coefficient is given by

$$K = \frac{\text{Reflected voltage at load}}{\text{Incident voltage at load}} = \frac{V_1}{V_2}$$

The VSWR of the line is given by

$$\text{VSWR} = S = \frac{1+|K|}{1-|K|}$$

SOLVED PROBLEMS

Example 1

A lossless transmission line has a shunt capacitance of 100 p F/m and series inductance of 4 μH/m. Determine the characteristic impedance.

Solution :

The characteristic impedance of a lossless line is,

$$Z_o = R_o = \sqrt{\frac{L}{C}} = \sqrt{\frac{4\times10^{-6}}{100\times10^{-12}}}$$

$$= 200\ \Omega$$

Tamilnadu College Of Engineering

Example 2

At a frequency of 80MHz, a lossless transmisson line has a characteristic impedance of 300 ohm and wavelength of 2.5m. Find L and C.

Solution

Given that $Z_0 = \sqrt{\frac{L}{C}} = 300$

Therefore $\frac{L}{C} = 90000$ ... (1)

and $\lambda = \frac{2\pi}{\beta} = \frac{2\pi}{\omega\sqrt{LC}} = 2.5$ where $w = 2\pi f = 2\pi\times80\times10^6$

$\frac{2\pi}{2\pi\times80\times10^6\sqrt{LC}} = 2.5$ and $\sqrt{LC} = 5\times10^{-9}$

Therefore $LC = 2.5\times10^{-17}$ ... (2)

Multiplying equation (1) and (2) gives,

$L = 1.5\,\mu H$

Dividing equation (2) by (1) gives,

$C = 16.6667pF$

Example 3

A line with zero dissipation has L = 2.5 μH/m and C = 4.45pF/m. If the line is operated at 10MHz, find i) R_o ii) α iii) β iv) ν v) λ.

The characteristic impedance is given by

$$Z_0 = R_0 = \sqrt{\frac{L}{C}} = \sqrt{\frac{2.5\times10^{-6}}{4.45\times10^{-12}}} = 749.53\Omega$$

The propagation constant is given by

$$\gamma = \alpha + j\beta = j\omega\sqrt{LC} \text{ where } \omega = 2\pi f = 2\pi\times10\times10^6$$

Therefore $\alpha = 0$

Tamilnadu College Of Engineering

$$\beta = \omega\sqrt{LC} = (2\pi\times10\times10^{6})\sqrt{2.5\times10^{-6}\times4.45\times10^{-12}}$$
$$= 0.2095 \text{ rad/m}$$

Velocity of propogation is given by

$$v = \frac{1}{\sqrt{LC}} = \frac{1}{\sqrt{2.5\times10^{-6}\times4.45\times10^{-12}}} = 2.998\times10^{8} \text{ m/s}$$

The wavelength is given by

$$\lambda = \frac{2\pi}{\beta} = \frac{2\pi}{0.2095} = 29.9913\ m$$

Example 4

A lossless line has a characteristic impedance of 400 ohm. Determine the standing wave ratio if the receiving end impedance is 800 + j0.0 ohm.

Solution :

Given that $R_o = 400\,\Omega$ and $Z_R = 800 + j\,0.0 = 800\,\Omega$

The reflection coefficient is given by

$$K = \frac{Z_R - R_o}{Z_R + R_o} = \frac{800-400}{800+400} = \frac{400}{1200} = 0.3333\angle 0^{\circ}$$

The standing wave ratio is given by

$$S = \frac{1+|K|}{1-|K|} = \frac{1+0.3333}{1-0.3333} = 1.99985$$

Example 5

A radio frequency line with Z_o = 70 ohm terminated by Z_L = 115 − j80Ω. Find the VSWR and the maximum and minimum line impedances.

Solution :

Given that $R_o = Z_o = 70\,\Omega$ and $Z_L = Z_R = 115 - j\,80\ \Omega$

The reflection coefficient is given by,

$$K = \frac{Z_R - R_o}{Z_R + R_o} = \frac{(115-j80)-70}{(115-j80)+70} = \frac{45-j80}{185-j80}$$

Tamilnadu College Of Engineering

$$= \frac{91.7877\angle -60.64^\circ}{201.5564\angle -23.38^\circ} = 0.4553 \angle -37.26^\circ$$

VSWR is given by

$$S = \frac{1+|K|}{1-|K|} = \frac{1+0.4553}{1-0.4553} = 2.6717$$

Maximum line impedance is given by

$$R_{max} = SZ_o = SR_o = (2.6717)(70) = 187.02\ \Omega$$

Minimum line impedance is given by,

$$R_{min} = \frac{Z_o}{S} = \frac{R_o}{S} = \frac{70}{2.6717} = 26.2\Omega$$

Example 6

A lossless line has a standing wave ratio of 4. The R_o is 150 ohm and the maximum voltage measured on the line is 135V. Find the power being delivered to the load.

Solution :

At voltage maxima the impedance is maximum and is given by,

$$R_{max} = SR_o = 4\,(150) = 600\Omega$$

The power delivered to the load is given by

$$P = \frac{E_{max}^2}{R_{max}} = \frac{(135)^2}{600} = 30.375\ W$$

Example 7

What are the values of SWR for open circuit, short circuits and matched load?

Solution :

The value of SWR is given by

$$SWR = \frac{1+|K|}{1-|K|}$$

Tamilnadu College Of Engineering

When load is either open circuit or short circuit the value of $|K| = 1$.

Therefore $$SWR = \frac{1+1}{1-1} = \infty$$

When the load is matched with characteristic impedance the valoue of $|K| = 0$.

Therefore $$SWR = \frac{1+0}{1-0} = 1$$

Example 8

If VSWR of line is 1.5 then calculate |K|.

Solution :

$$VSWR = \frac{1+|K|}{1-|K|} = 1.5$$

$$1 + |K| = 1.5 - 1.5\,|K|$$

$$2.5\,|K| = 0.5$$

$$|K| = 0.2$$

Example 9

A 50 ohm coaxial cable feeds a 75 + j 20 ohm dipole antenna. Find reflection coefficient and standing wave ratio.

Solution :

$$K = \frac{Z_R - R_o}{Z_R + R_o} = \frac{(75 - j20) - 50}{(75 - j20) + 50} = \frac{25 + j20}{125 + j20}$$

$$= 0.2199 + j0.1248 = 0.2529 \angle 29.56^\circ$$

$$|K| = 0.2529$$

$$S = \frac{1+|K|}{1-|K|} = \frac{1+0.2529}{1-0.2529} = 1.677$$

Tamilnadu College Of Engineering

Example 10

Calculate the characteristic impedance, propagation constant and velocity of propagation at 400×10^3 Hz for a transmission line having $L = 0.5\,mH/km$, $C = 0.08$ μF/km and negligible R and G

Solution :

Given that $R = G = 0$ *(Dissipationless line)*

The characteristic impedance of a dissipationless line is,

$$R_o = \sqrt{\frac{L}{C}} = \sqrt{\frac{0.5 \times 10^{-3}}{0.08 \times 10^{-6}}} = 79.08\ \Omega$$

The propagation constant of a dissipationless line is,

$$\gamma = \beta = \omega\sqrt{LC} \text{ where } \omega = 2\pi f = 2\pi \times 400 \times 10^3$$

$$= 2\pi \times 400 \times 10^3 \times \sqrt{0.5 \times 10^{-3} \times 0.08 \times 10^{-6}}$$

$$= 15.9\ rad/km$$

The velocity of propagation is given by,

$$v = \frac{\omega}{\beta} = \frac{1}{\sqrt{LC}} = \frac{1}{\sqrt{0.5 \times 10^{-3} \times 0.08 \times 10^{-6}}}$$

$$= 1.583 \times 10^5\ km/sec$$

Example 11

A high frequency transmission line consist of a pair of open wires having a distributed capacitance of 0.01 μF / km and a distributed inductance of 3 mH/km. What is the characteristic impedance and propagation constant at f = 10MHz?

Solution :

At high frequency line the characteristic impedance is,

$$R_o = \sqrt{\frac{L}{C}} = \sqrt{\frac{3 \times 10^{-3}}{0.01 \times 10^{-6}}} = 547.7\ \Omega$$

Tamilnadu College Of Engineering

The propagaion constant is given by,

$$\gamma = \beta = \omega\sqrt{LC} \text{ where } \omega = 2\pi f = 2\pi \times 10 \times 10^6$$

$$= 2\pi \times 10 \times 10^6 \times \sqrt{3 \times 10^{-3} \times 0.01 \times 10^{-6}}$$

$$= 344.156 \ rad/km$$

Example 12

A transmission line of characteristic impedance 600 Ω is terminated by a reactance of j 150 Ω, find the input impedance of a section 25cm long at a frequency of 300MHz

Solution :

Given that $R_o = 600\,\Omega,\ Z_R = j150\Omega$ and $f = 300 \times 10^6$ Hz

$$s = 25cm = \frac{25}{100}\,m = \frac{1}{4}\,m$$

Since

$$\lambda = \frac{c}{f} = \frac{3 \times 10^8}{300 \times 10^6} = 1\,m$$

$$\beta s = \frac{2\pi}{\lambda}\,s = 2\pi\left(\frac{1}{4}\right) = \frac{\pi}{2}$$

The input impedance of a highfrequency (dissipation less line) line is given by,

$$Z_s = R_o\left[\frac{Z_R + j\,R_o \tan\beta s}{R_o + j\,Z_R \tan\beta s}\right] = R_o\left[\frac{Z_R + j\,R_o \tan\frac{\pi}{2}}{R_o + j\,Z_R \tan\frac{\pi}{2}}\right]$$

where $\tan\frac{\pi}{2} = \infty$

$$= R_o\left[\frac{j\,R_o}{j\,Z_R}\right] = \frac{R_o^2}{Z_R}$$

$$= \frac{(600)^2}{j\,150} = -\,j\,2400\,\Omega$$

Tamilnadu College Of Engineering

Example 13

An ideal loss less transmission line of characteristic impedance 60 Ω is connected to a resistive load. If the standing wave ratio on the line is 4, calculate reflection coefficient K and load impedance Z_R.

Solution :

Given that $R_o = 60\Omega$ *and* $S = 4$

The reflection coefficient is given by,

$$K = \frac{S-1}{S+1} = \frac{4-1}{4+1} = \frac{3}{5} = 0.6$$

Since $$K = \frac{Z_R - R_o}{Z_R + R_o}$$

Then $$\frac{K+1}{K-1} = \frac{Z_R - R_o + Z_R + R_o}{Z_R - R_o - Z_R - R_o} = -\frac{Z_R}{R_o}$$

Therefore $$Z_R = -R_o\left[\frac{K+1}{K-1}\right] = -60\left[\frac{0.6+1}{0.6-1}\right]$$

$$= 240\ \Omega$$

Example 14

A transmission line of characteristic impedance 50 Ω is terminated by a resistor 100 Ω. What will be the standing wave ratio in the line ? Calculate the impedance at the voltage maximum and minimum position.

Solution :

Given that $R_o = 50\Omega$ and $Z_R = 100\,\Omega$

The reflection coeffiecient of the line is given by,

$$K = \frac{Z_R - R_o}{Z_R + R_o} = \frac{100-50}{100+50} = \frac{50}{150} = \frac{1}{3}$$

The standing wave ratio of the line given by

$$S = \frac{1+|K|}{1-|K|} = \frac{1+\frac{1}{3}}{1+\frac{1}{3}} = 2$$

Tamilnadu College Of Engineering

The impedance at voltage maximum portion given by,

$$R_{max} = SR_o = 2 \times 50 = 100\ \Omega$$

The impedance at voltage minimum position is given by,

$$R_{min} = \frac{R_o}{S} = \frac{50}{2} = 25\Omega$$

Example 15

A transmission line with a characteristic impedance of 300 Ω is terminated in a purely resistive load. It is found by measurement that the minimum value of voltage upon it is 5μV and the maximum value is 7.5 μV. Calculate the value of load resistance.

Solution :

Given that $Z_o = 300\,\Omega$, $E_{max} = 7.5\,\mu V$ and $E_{min} = 5\mu V$

The standing wave ratio is given by,

$$S = \left|\frac{E_{max}}{E_{min}}\right| = \frac{7.5 \times 10^{-6}}{5 \times 10^{-6}} = 1.5$$

The standing wave ratio and reflection coefficient of line is related by,

$$K = \frac{S-1}{S+1} = \frac{1.5-1}{1.5+1} = 0.33$$

The reflection coeficient of a line is given by,

$$K = \frac{Z_R - R_o}{Z_R - R_o}$$

$$0.33 = \frac{Z_R - 300}{Z_R - 300}$$

$$(Z_R + 300) \times 0.33 = Z_R - 300$$

$$Z_R \times 0.33 + 99 = Z_R - 300$$

$$Z_R\,(1 - 0.33) = 300 + 99 = 399$$

$$Z_R\,(0.67) = 399$$

$$Z_R = \frac{399}{0.67} = 595.22\ \Omega$$

Tamilnadu College Of Engineering

Example 16

Measurements on a terminated transmission line have the following results. $S = 3.2$, location of the first voltage minimum $= 0.23\lambda$ from the load and the characteristic impedance is $50\,\Omega$. Calculate the terminating impedance.

Solution :

Given that $S = 3.2$ and $s = 0.23\lambda$ where $\beta = \dfrac{2\pi}{\lambda}$

Then $\beta s' = \dfrac{2\pi}{\lambda}(0.23\lambda) = 1.444$ radian

$$= 1.444 \times \frac{180}{\pi} = 82.76^\circ$$

The terminating impedance (unknown impedance) is given by

$$Z_R = R_o\left[\frac{1 - j\,S\tan\left(\frac{2\pi s^1}{\lambda}\right)}{S - j\tan\left(\frac{2\pi s^1}{\lambda}\right)}\right]$$

$$= 50\left[\frac{1 - j\,3.2\tan(82.76^\circ)}{3.2 - j\tan(82.76^\circ)}\right] = 50\left[\frac{1 - j\,24.9798}{3.2 - j\,7.8062}\right]$$

$$= 50\left[\frac{25\angle -87.8^\circ}{8.43\angle 67.7^\circ}\right] = 140.275\angle -87.8^\circ - (-67.7^\circ)$$

$$= 148.275\angle -20.1^\circ$$

Example 17

Lossless transmission line of characteristic impedance 50Ω and half wavelength long is left open circuited at the far end. The rms value of the open circuited voltage is 10 volts. Calculate the rms value of voltage and current at distance of eight wavelength away from the open circuit.

Solution :

Given that $R_o = 50$, $E_R = 10\text{V}$, $I_R = 0$ (open circuited line) and $s = \frac{\lambda}{8}$

Then $\beta s = \dfrac{2\pi}{\lambda} \times \dfrac{\lambda}{8} = \dfrac{\pi}{4}$

Tamilnadu College Of Engineering

The voltage and current at a distance $\frac{\lambda}{8}$ from the open circuit end is given by,

$$E = E_R \cos\beta s + j\, I_R\, R_o \sin\beta s = 10 \cos\frac{\pi}{4} = 7.071 \text{ V}$$

$$I = I_R \cos\beta s + j\frac{E_R}{R_o}\sin\beta s = j\frac{10}{50}\sin\frac{\pi}{4} = j\,0.14142 \text{ A}$$

Example 18

When the far end of a transmission line is short circuited the impedance measuresd at the sending end is 4.61 ohm resistive and when that is open circuited, the input becomes 1390 ohm resistive. Calculate the characteristic impedance.

Solution :

Given that $Z_{sc} = 4.61\Omega$ *and* $Z_{oc} = 1390\,\Omega$

The characteristic impedance is given by

$$Z_o = R_o = \sqrt{Z_{sc}\, Z_{oc}} = \sqrt{4.61 \times 1390}$$

$$= 80.05\,\Omega$$

Example 19

A lossless transmission line of characteristic impedance is equal to 50 Ω, is terminated by an unknown impedance. On measurement, a VSWR of 3 and a shift in the position of minima of (i) 2.5 cm at $\lambda = 0.6m$ (ii) 20 cm at $\lambda = 2m$ and (iii) 18 cm at $\lambda = 0.4m$ are observed. Find angle of reflection coefficient (ϕ) for each case in degree.

Solution:

The voltage is minimum (minimum input impedance) at a distance,

$$s = \frac{\phi + \pi}{2\beta}$$

Therefore $\phi = 2\beta s - \pi$

Tamilnadu College Of Engineering

(i) $s = 2.5$ cm $\quad \phi = 2\times\frac{2\pi}{\lambda}\times 2.5\times 10^{-2} - \pi$, where $\lambda = 0.6m$

$$= -2.61 \text{ rad} = -2.61\times\frac{180}{\pi} \text{ degree}$$

$$= -149.5^\circ$$

(ii) $s = 20$ cm $\quad \phi = 2\times\frac{2\pi}{\lambda}\times 20\times 10^{-2} - \pi$, where $\lambda = 2m$

$$= -1.884 \text{ rad} = -1.884\times\frac{180}{\pi} \text{ degree}$$

$$= -107.95^\circ$$

(iii) $s = 18$ cm $\quad \phi = 2\times\frac{2\pi}{\lambda}\times 18\times 10^{-2} - \pi$, where $\lambda = 0.4m$

$$= 2.512 \text{ rad} = 2.512\times\frac{180}{\pi} \text{ degree}$$

$$= 143.93^\circ$$

Example 20

A lossless transmission line having characteristic impedance of 600 Ω is terminated by a resistance of 300 Ω. Calculate the voltage standing wave ratio in the line.

Solution:

Given that $R_0 = 600\,\Omega$ and $Z_R = 300\,\Omega$

$$K = \frac{Z_R - R_0}{Z_R + R_0} = \frac{300-600}{300+600} = \frac{-300}{900}$$

$$= -\frac{1}{3}$$

$$|K| = \frac{1}{3}$$

Tamilnadu College Of Engineering

$$S = \frac{1+|K|}{1-|K|} = \frac{1+\frac{1}{3}}{1-\frac{1}{3}} = \frac{4}{2}$$

$$= 2$$

Example 21

Calculate the voltage standing ratio for lossless line of characteristic impedance 50 Ω when it is terminated in 100 Ω and 30 – j 50 Ω.

Solution:

When $Z_R = 100\,\Omega$

$$K = \frac{Z_R - R_0}{Z_R + R_0} = \frac{100-50}{100+50} = \frac{1}{3}$$

$$S = \frac{1+|K|}{1-|K|} = \frac{1+\frac{1}{3}}{1-\frac{1}{3}} = 2$$

When $Z_R = 30 - j\,50\,\Omega$

$$K = \frac{30 - j50 - 50}{30 - j\,50 + 50} = \frac{-20 - j\,50}{80 - j\,50} = \frac{-2 - j\,5}{8 - j\,5}$$

$$= \frac{5.385\angle -111.80^\circ}{9.433\angle -32^\circ} = 0.5713\angle -79.5^\circ$$

$$|K| = 0.5713$$

$$S = \frac{1+0.5713}{1-0.5713} = \frac{1.5713}{0.4287}$$

$$= 3.6652$$

Tamilnadu College Of Engineering

Example 22

A lossless line in air having a characteristic impedance of 300 Ω is terminated by an unknown impedance. The standing wave ratio is 3.3 and $\phi = 0°$ calculate the terminated impedance.

Solution:

$$K = \frac{S-1}{S+1} = \frac{3.3-1}{3.3+1} = \frac{2.3}{4.3}$$

$$= 0.5348$$

$$|K|\, e^{j\phi} = \frac{Z_R - R_0}{Z_R + R_0}, \text{ where } \phi = 0° \text{ and } e^{0} = 1. \text{ Therefore}$$

$$|K| = \frac{Z_R - 300}{Z_R + 300} = 0.5348$$

$$0.5348\,[Z_R + 300] = Z_R - 300$$

$$0.5348\, Z_R + 160.44 = Z_R - 300$$

$$Z_R\,[0.5348 - 1] = -300 - 160.44$$

$$Z_R\,[-0.4652] = -460.44$$

$$Z_R = \frac{460.44}{0.4652}$$

$$= 990\ \Omega$$

Example 23

Consider a line of 300 Ω terminated by an unknown impedance. The standing wave ratio is 4.48 and $\phi = -151.13°$. Find the terminating impedance.

Solution:

$$K = \frac{S-1}{S+1} = \frac{4.48-1}{4.48+1} = \frac{3.48}{5.48}$$

$$= 0.635$$

$$|K|\, e^{j\phi} = \frac{Z_R - R_0}{Z_R + R_0}$$

Tamilnadu College Of Engineering

$$0.635\,[e^{-j151.13^\circ}] = \frac{Z_R - 300}{Z_R + 300}$$

$$0.635\,[\cos(151.13^\circ) - j\sin(151.13^\circ)] = \frac{Z_R - 300}{Z_R + 300}$$

$$0.635\,[-0.8759 - j\,0.4825] = \frac{Z_R - 300}{Z_R + 300}$$

$$-0.5561 - j\,0.3063 = \frac{Z_R - 300}{Z_R + 300}$$

$$[Z_R + 300]\,[0.5561 + j\,0.3063] = 300 - Z_R$$

$$Z_R\,[1.5561 + j\,0.3063] + 166.83 + j\,91.89 = 300$$

$$Z_R\,[1.5561 + j\,0.3063] = 300 - 166.83 - j\,91.89$$

$$Z_R = \frac{133.17 - j\,91.89}{1.556 + j\,0.3063}$$

$$= \frac{161.796\angle -34.60^\circ}{1.5858\angle 11.14^\circ}$$

$$= 102.02\angle -45.74^\circ\ \Omega$$

$$|Z_R| = 102.02\,\Omega$$

Example 24

A lossless transmission line having a characterislre impedance of 50 Ω are of length 50 m is left open circuited at the far end. If the open circuit voltage is $100\angle 0^\circ$ V. Calculate the voltage and current at a distance of 10 m away from the open circuit, assuming the generator frequency to 20 MHz.

Solution:

Given that $R_0 = 50\,\Omega, l = 50m$ and $s = 10\,m$

$I_R = 0$ for open circuited line

$$\lambda = \frac{c}{f} = \frac{3\times10^8}{20\times10^6} = 15m$$

Tamilnadu College Of Engineering

$$\beta = \frac{2\pi}{\lambda} = \frac{2\pi}{15} = 0.4186 \text{ radians}$$

$$\beta = 0.4186 \times \frac{180}{\pi} = 23.98^\circ$$

The voltage of lossless transmission line is given by

$$E = E_R \cos\beta s + j I_R R_0 \sin\beta s = E_R \cos\beta s$$

$$= 100 \cos(23.98^\circ \times 10) = -50.17 \text{ V}$$

$$= 50.17 \angle 180^\circ \text{ V}$$

The current of lossless transmission line is given by

$$I = I_R \cos\beta s + j\frac{E_R}{R_0}\sin\beta s = j\frac{E_R}{R_0}\sin\beta s$$

$$= j\frac{100}{50}\sin(23.98^\circ \times 10) = j1.73 \text{ A}$$

$$= 1.73 \angle 90^\circ \text{ A}$$

Example 25

A certain RF transmission line is terminated in pure resistive load. The characteristic impedance of the line is 1200 Ω and the reflection coefficient was observed to be 0.2. Calculate the terminating load, which is less than characteristic impedance.

Solution:

At radio frequencies $S = \frac{R_0}{R_R}$ for $R_0 > R_R$

$$S = \frac{1200}{R_R}$$

$$K = \frac{S-1}{S+1} = 0.2$$

Tamilnadu College Of Engineering

$$0.2 = \frac{\frac{1200}{R_R} - 1}{\frac{1200}{R_R} + 1}$$

$$0.2\,[R_R + 1200] = 1200 - R_R$$

$$0.2\,R_R + R_R = 1200 - 240$$

$$1.2\,R_R = 960$$

$$R_R = \frac{960}{1.2} = 800\,\Omega$$

Example 26

A lossless transmission line with $R_0 = 75\,\Omega$ and of electrical length $s = 0.3\,\Omega$ is terminated with load impedance of $Z_R = 40 + j\,20\,\Omega$. Determine the reflection coefficient at load, SWR of the line and input impedance of the line.

Solution:

The reflection coefficient is given by,

$$K = \frac{Z_R - R_0}{Z_R + R_0} = \frac{(40 + j\,20) - 75}{(40 + j\,20) + 75}$$

$$= \frac{-35 + j\,20}{115 + j\,20} = \frac{40.311\angle 24.74^\circ}{116.726\angle 9.86^\circ}$$

$$= 0.3453\angle 19.88^\circ$$

$$|K| = 0.3453$$

The standing wave ratio is given by,

$$S = \frac{1 + |K|}{1 - |K|} = \frac{1 + 0.3453}{1 - 0.3453}$$

$$= 2.0548$$

Tamilnadu College Of Engineering

The input impedance of the line is given by,

$$Z_s = R_0 \left[\frac{Z_R + j R_0 \tan\left(\frac{2\pi s}{\lambda}\right)}{R_0 + j Z_R \tan\left(\frac{2\pi s}{\lambda}\right)} \right]$$

$$= 75 \left[\frac{(40 + j\,20) + j\,75 \tan\left(\frac{2\pi \times 0.3\,\lambda}{\lambda}\right)}{75 + j\,(40 + j\,20) \tan\left(\frac{2\pi \times 0.3\,\lambda}{\lambda}\right)} \right]$$

$$= 75 \left[\frac{40 + j\,20 + j\,(-230.82)}{75 + (-j\,123.1) + (61.55)} \right]$$

$$= 75 \left[\frac{40 - j\,210.82}{136.55 - j\,123.1} \right] = 75 \left[\frac{214.581 \angle -79.25^\circ}{183.84 \angle -42.03^\circ} \right]$$

$$= 75\ [1.167 \angle -37.22^\circ]\,\Omega$$

$$= 69.7 - j\,52.95\,\Omega$$

Example 27

A slotted line experiment performed with following results, distance between successive minimum is 21 cm, distance of first voltage minimum from load is 0.9 cm, SWR of line is 2.5, if $R_0 = 50\,\Omega$ determine the load impedance.

Solution:

Given that $S = 2.5$ and $s' = 0.9\,cm$

$$\frac{\lambda}{2} = 21\,cm \text{ ie } \lambda = 42\,cm$$

Then $$\beta s' = \frac{2\pi s'}{\lambda} = \frac{2\pi \times 0.9}{42} = 0.1346 \text{ radians}$$

$$= 0.1346 \times \frac{180}{\pi} = 7.714^\circ$$

Tamilnadu College Of Engineering

The load impedance is given by,

$$Z_R = R_0 \left[\frac{1 - j\,S \tan\left(\frac{2\pi s'}{\lambda}\right)}{S - j \tan\left(\frac{2\pi s'}{\lambda}\right)} \right]$$

$$= 50 \left[\frac{1 - j\,2.5 \tan(7.714^\circ)}{2.5 - j \tan(7.714^\circ)} \right]$$

$$= 50 \left[\frac{1 - j\,2.5\,(0.1354)}{2.5 - j\,0.1354} \right]$$

$$= 50 \left[\frac{1 - j\,0.0338}{2.5 - j\,0.1355} \right] = 50 \left[\frac{1 \angle -1.9401^\circ}{2.5 \angle -3.102^\circ} \right]$$

$$= 50\,[0.4 \angle 1.1622^\circ]$$

$$= 20 \angle 1.1622^\circ\ \Omega$$

Example 28

A certain low loss line has characteristic impedance of 400 Ω. Determine the standing wave ratio with the following receiving end impedance (i) $Z_R = 70\ \Omega$ (ii) $Z_R = 800\ \Omega$ (iii) $Z_R = 650 - j\,475\ \Omega$.

Solution:

(i) $Z_R = 70\ \Omega$ (Resistive load) and $R_0 > R_R$. Therefore

$$S = \frac{R_0}{R_R} = \frac{400}{70}$$

$$= 5.71$$

(ii) $Z_R = 800\ \Omega$ (Resistive load) and $R_R > R_0$. Therefore

$$S = \frac{R_R}{R_0} = \frac{800}{400}$$

$$= 2$$

Tamilnadu College Of Engineering

(iii) $Z_R = 650 - j\,475\,\Omega$

$$K = \frac{Z_R - R_0}{Z_R + R_0} = \frac{650 - j475 - 400}{650 - j\,475 + 400}$$

$$= \frac{250 - j\,475}{1050 - j\,475} = \frac{536.77\angle -62.24^\circ}{1152.44\angle -24.34^\circ}$$

$$= 0.466\angle -37.9^\circ$$

$$|K| = 0.466$$

$$S = \frac{1+|K|}{1-|K|} = \frac{1+0.466}{1-0.466}$$

$$= 2.746$$

Example 29

A two wire open air line, whose diameter is 2.588 mm is used in several applications. The wires are spaced at 290 mm between the centres. Find out the characteristic impedance of the line.

Solution:

Radius of the wire is given by

$$a = \frac{\text{diameter}}{2} = \frac{2.588}{2} = 1.294\ mm$$

Spacing between the wire is

$$d = 290\ \text{mm}$$

The charateristic impedance of the two - wire open air line is given by

$$Z_0 = 276 \log \frac{d}{a}$$

$$= 276 \log \frac{290}{1.294}$$

$$= 648.7\ \Omega$$

Tamilnadu College Of Engineering

Example 30

A copper coaxial line has an outside tubing of thickness 1.8mm and its outside diameter is 30 mm. The thickness of the inner tubing is 1.0 mm and its outside diameter is 8 mm, air spaced between the tubes. Find the characteristic impedance of the line.

Solution:

Diameter of the outside conductor is

$$b = 30 - 2 \times 1.8 = 26.4 \text{ mm}$$

Diameter of the inside conductor is

$$a = 8 - 2 \times 1.0 = 6.0 \text{ mm}$$

The characteristic impedance of coaxial cable is given by

$$Z_0 = \frac{138}{\sqrt{\varepsilon_r}} \log \frac{b}{a} \text{ where } \varepsilon_r = 1 \text{ for air}$$

$$= 138 \log \left(\frac{26.4}{6} \right)$$

$$= 88.79\ \Omega$$

Example 31

A cable of coaxial type has Z_0 of 75 Ω and a capacitance of 70 pF/m. Find its inductance per metre. If the radius of the inner conductor is 0.292 mm and the relative permittivity of the dielectric is 2.3, determine the radius of the outer conductor.

Solution :

$$Z_0 = \sqrt{\frac{L}{C}}$$

$$Z_0^2 = \frac{L}{C}$$

$$L = Z_0^2 C$$

Tamilnadu College Of Engineering

$$= (75)^2 \times 70 \times 10^{-12}$$

$$= 0.3937\ \mu H/m$$

The characteristic impedance of coaxial cable is given by

$$Z_0 = \frac{138}{\sqrt{\varepsilon_r}} \log \frac{b}{a}$$

$$\log \frac{b}{a} = \frac{Z_0 \sqrt{\varepsilon_r}}{138}$$

$$= \frac{75\sqrt{2.3}}{138} = 0.8242$$

$$\frac{b}{a} = \text{Antilog } 0.8242 = 6.671 \ \{\text{Antilog } 0.8242 = 10^{(0.8242)}\}$$

$$b = 0.292 \times 6.671$$

$$= 1.9479 \text{ mm}$$

Example 32

If a signal of 30 MHz transmitted through a coaxial cable which has a capacitance of 30 pF/m and an inductance of 500 nH/m. (i) Find the time delay for a cable 1m long (ii) Propagation velocity (iii) Propagation delay over a cable length of 10m.

Solution :

The time delay for 1 m long cable is

$$t_d = \sqrt{LC}$$

$$= \sqrt{(500 \times 10^{-9})(30 \times 10^{-12})}$$

$$= 3.87 \text{ ns}$$

Velocity of propagation is given by

$$v = \frac{1\ metre}{3.87 \times 10^{-9}}$$

$$= 2.5839 \times 10^8\ m/s$$

Tamilnadu College Of Engineering

The time delay for 10m long cable is

$$t_d = 10 \times t_d \text{ for 1m long cable}$$
$$= 10 \times 3.89 \text{ ns}$$
$$= 38.7 \text{ ns}$$

Example 33

The dielectric material between two conductors of a lossless coaxial cable has $\varepsilon_r = 4$ and $\mu_r = 1$. Diameter of the inner conductor is 2mm. Characteristic impedance in 50 Ω. Determine the diameter of the outer conductor of the coaxial cable.

Solution:

The expression for inductance and capacitance of a coaxial cable is

$$L = \frac{\mu}{4\pi} ln \frac{b}{a} \text{ and } C = \frac{2\pi\varepsilon}{ln \frac{b}{a}}$$

where $\mu = \mu_0 \mu_r = 4\pi \times 10^{-7} \times 1 = 4\pi \times 10^{-7}$

$$\varepsilon = \varepsilon_0 \varepsilon_r = 8.854 \times 10^{-12} \times 4 = 3.5416 \times 10^{-11}$$

The expression for the characteristic impedance is

$$Z_0 = \sqrt{\frac{L}{C}}$$

$$= \sqrt{\frac{\frac{\mu}{4\pi} ln\left(\frac{b}{a}\right)}{\frac{2\pi\varepsilon}{ln\left(\frac{b}{a}\right)}}}$$

$$= \frac{1}{2\pi}\sqrt{\frac{\mu}{\varepsilon}} ln \frac{b}{a}$$

$$ln \frac{b}{a} = \frac{Z_0 \times 2\pi}{\sqrt{\frac{\mu}{\varepsilon}}}$$

Tamilnadu College Of Engineering

$$\sqrt{\frac{\mu}{\varepsilon}} = \sqrt{\frac{4\pi\times10^{-7}}{3.5416\times10^{-11}}} = 1.8836\times10^{2}.$$ Therefore

$$ln\frac{b}{a} = \frac{50\times2\pi}{1.8836\times10^{2}} = 1.6678$$

$$\frac{b}{a} = e^{1.6678}$$

$$b = a\times e^{1.6678}$$

$$= 2\times5.3$$

$$= 10.6 \text{ mm}$$

Example 34

An open wire line consists of two copper conductors each of radius 2mm and are separated by a distance of 250 mm in air. Calculate the following per unit length of the line at 40 kHz. (i) Inductance (ii) Capacitance (iii) DC resistance given that $\sigma = 5.75\times10^{7}$ ℧ / m (iv) AC resistance.

Solution:

Given that a = 2mm, d = 250 mm, f = 40 kHz, $\sigma = 5.75\times10^{7}$ ℧ / m and $l = 1\,m$

The inductance of an open wire line is given by

$$L = 9.21\times10^{-7}\log\frac{d}{a}$$

$$= 9.21\times10^{-7}\log\left(\frac{250}{2}\right) = 1.931\times10^{-6}$$

$$= 1.931\,\mu\text{H}/m$$

The capacitance of an open wire line is given by

$$C = \frac{12.07\,\varepsilon_r}{\log\frac{d}{a}}\times10^{-12}$$

Tamilnadu College Of Engineering

$$= \frac{12.07 \times 1}{\log\left(\frac{250}{2}\right)} \times 10^{-12} \quad \text{where } \varepsilon_r = 1 \text{ for air}$$

$$= 5.756 \times 10^{-12} = 5.756\ p\,\text{F}/m$$

The DC resistance of an open wire line is given by

$$R_{dc} = \frac{K}{\pi a^2} \quad \text{where } K = \rho l = \frac{l}{\sigma}$$

$$= \frac{l}{\pi a^2 \sigma}$$

$$= \frac{1}{\pi (2 \times 10^{-3})^2 (5.75 \times 10^7)} = 1.385 \times 10^{-3}$$

$$= 1.385\, m\Omega / m$$

The ratio of AC to DC resistance is given by

$$\frac{R_{ac}}{R_{dc}} = 7.53\, a \sqrt{f}$$

$$R_{ac} = R_{dc}(7.53\, a \sqrt{f})$$

$$= (1.385 \times 10^{-3})(7.53 \times 2 \times 10^{-3} \times \sqrt{40 \times 10^3}) = 4.1716 \times 10^{-3}$$

$$= 4.1716\, m\,\Omega / m$$

Example 35

A coaxial cable is made of copper having conductivity of 5.75×10^7 ℧ / m. The inner conductor has a radius of 2 mm, the outer conductor has inner radius of 8mm and has a thickness of 1 mm. The space between conductor is filled with a dielectric material of relative permittivity 4. Calculate per km the following (i) Inductance (ii) capacitance (ii) DC resistance (iv) AC resistance at 150 kHz.

Solution:

Given that a = 2mm, b = 8mm, C = 8 + 1 = 9mm, $\varepsilon_r = 4$, $\sigma = 5.75 \times 10^7$ ℧ / m and f = 150 kHz.

Tamilnadu College Of Engineering

The inductance of a coaxial cable is given by

$$L = 4.60 \times 10^{-7} \log \frac{b}{a}$$

$$= 4.60 \times 10^{-7} \log \frac{8}{2} = 2.78 \times 10^{-7}$$

$$= 0.278 \; mH/km$$

The capacitance of a coaxial cable is given by

$$C = \frac{24.14 \times 10^{-12} \, \varepsilon_r}{\log \frac{b}{a}}$$

$$= \frac{24.14 \times 10^{-12} \, (4)}{\log \frac{8}{2}} = 1.603 \times 10^{-10}$$

$$= 0.1603 \, \mu F/km$$

The DC resistance of a coaxial cable is given by

$$R_{dc} = \frac{1}{\pi\sigma}\left[\frac{1}{a^2} + \frac{1}{c^2 - b^2}\right]$$

$$= \frac{1}{\pi (5.75 \times 10^7)}\left[\frac{1}{(2 \times 10^{-3})^2} + \frac{1}{(9 \times 10^{-3})^2 - (8 \times 10^{-3})^2}\right]$$

$$= 1.71 \, \Omega / km$$

The AC resistance of a coaxial cable is given by

$$R_{ac} = 4.16 \times 10^{-8} \sqrt{f}\left[\frac{1}{a} + \frac{1}{b}\right]$$

$$= 4.16 \times 10^{-8} \sqrt{150 \times 10^3}\left[\frac{1}{2 \times 10^{-3}} + \frac{1}{8 \times 10^{-3}}\right]$$

$$= 0.01 = 10 \, \Omega / km$$

Tamilnadu College Of Engineering

Example 36

The ratio of the spacing 'd' to the radius 'a' of an open wire dissipationless line is 25 and the space between the conductors has a dielectric of relative permittivity of 8. Determine (i) Inductance (ii) Capacitance (iii) Characteristic impedance (iv) Velocity of propagation.

Solution:

Given that $\frac{d}{a} = 25$ and $\varepsilon_r = 8$.

The inductance of an open wire line is given by

$$L = 9.21 \times 10^{-7} \log \frac{d}{a}$$

$$= 9.21 \times 10^{-7} \log 25 = 1.288 \times 10^{-6}$$

$$= 1.288\ \mu\text{H}/m$$

The capacitance of an open wire line is given by

$$C = \frac{12.07\,\varepsilon_r}{\log \frac{d}{a}} \times 10^{-12}$$

$$= \frac{(12.07)(8)}{\log 25} \times 10^{-12} = 69.07 \times 10^{-12}$$

$$= 69.07 \text{ pF/m}$$

The characteristic impedance of dissipationless line is given by

$$R_0 = \sqrt{\frac{L}{C}}$$

$$= \sqrt{\frac{1.288 \times 10^{-6}}{69.07 \times 10^{-12}}}$$

$$= 136.55\ \Omega$$

Tamilnadu College Of Engineering

The velocity of propagation is given by

$$v = \frac{1}{\sqrt{LC}}$$

$$= \frac{1}{\sqrt{(1.288\times10^{-6})(69.07\times10^{-12})}}$$

$$= 1.06\times10^{8}\ m/\sec$$

Example 37

A 50 MHz open wire line is to be built of copper wire of diameter 3.264 mm and to have $R_0 = 425\Omega$. Find (i) Desired spacing d (ii) Inductance and capacitance of 5 m of line.

Solution:

Given that $R_0 = 425\,\Omega$ and diameter = 3.264 mm = 2a. Therefore a = 1.632 mm. The characteristic impedance of an open wire line is given by

$$R_0 = 276.23 \log \frac{d}{a}$$

$$d = a\,10^{R_0/276.23}$$

$$= (1.632\times10^{-3})\,10^{(425/276.23)} = 0.0564$$

$$= 56.4 \text{ mm}$$

The inductance for an open wire line of 5m length is given by

$$L = 9.21\times10^{-7} \log \frac{d}{a}\times 5$$

$$= 9.21\times10^{-7} \log\left[\frac{56.4\times10^{-3}}{1.632\times10^{-3}}\right]\times 5$$

$$= 1.417\times10^{-6}\times 5 = 7.085\times10^{-6}$$

$$= 7.085\ \mu H/m$$

Tamilnadu College Of Engineering

The capacitance for an open wire line of 5m length is given by

$$C = \frac{12.07\,\varepsilon_r}{\log \frac{d}{a}} \times 10^{-12} \times 5 \qquad \text{where } \varepsilon_r = 1 \text{ for air}$$

$$= \frac{12.07 \times 10^{-12} \times 5}{\log \left[\frac{56.4 \times 10^{-3}}{1.632 \times 10^{-3}}\right]} = 39.225 \times 10^{-12}$$

$$= 39.225 \text{ pF/m}$$

Example 38

An air filled coaxial line of copper is to have a capacitance of 22 pF per metre. The inner conductor has a diameter of 0.1 cm. Find (i) Inductance (ii) Inner radius of outer conductor (iii) Characteristic impedance (iv) Phase constant and wave length at 25 MHz (v) Velocity of Propagation.

Solution:

Given that C = 22 pF, $\varepsilon_r = 1$ for air and Diameter 2a = 0.1 cm then a= 0.05cm

The capacitance of a coaxial line is given by

$$C = \frac{24.13 \times 10^{-12}\,\varepsilon_r}{\log \frac{b}{a}}$$

$$\log \frac{b}{a} = \frac{24.13 \times 10^{-12}\,\varepsilon_r}{C} = \frac{24.13 \times 10^{-12} \times 1}{22 \times 10^{-12}}$$

$$= 1.0968$$

The inductance of a coaxial line is given by

$$L = 4.61 \times 10^{-7} \log \frac{b}{a}$$

$$= 4.61 \times 10^{-7} \times 1.0968 = 0.506 \times 10^{-6}$$

$$= 0.506\ \mu H / m$$

Tamilnadu College Of Engineering

Inner radius of outer conductor is given by

$$\log \frac{b}{a} = 1.0968$$

$$b = a\,10^{(1.0968)}$$

$$= 0.05 \times 10^{-2} \times 10^{(1.0968)} = 6.25 \times 10^{-3}$$

$$= 6.25 \text{ mm}$$

The characterstic impedance of a coaxial line is given by

$$R_0 = \frac{138.22}{\sqrt{\varepsilon_r}} \log \frac{b}{a}$$

$$= \frac{138.22}{1}(1.0968)$$

$$= 151.6\,\Omega$$

The phase constant is given by

$$\beta = \omega\sqrt{LC} \text{ where } \omega = 2\pi f$$

$$= 2\pi \times 25 \times 10^6 \sqrt{(0.506 \times 10^{-6})(22 \times 10^{-12})}$$

$$= 0.524 \text{ rad / m}$$

The wavelength is given by

$$\lambda = \frac{2\pi}{\beta}$$

$$= \frac{2\pi}{0.524}$$

$$= 12\ m$$

The velocity of propagation for a coaxia line is given by

$$V = \frac{3 \times 10^8}{\sqrt{\varepsilon_r}}$$

$$= 3 \times 10^8 \text{ m/s}$$

Tamilnadu College Of Engineering

Example 39

An open wire line is to be manufactured with a spacing 'd' of 30.25 mm and is to have an inductance of 0.96 μH / m. If the dielectric is air determine (i) Diameter (ii) Capacitance (iii) Characteristic impedance.

Solution:

Given that d = 30.25 mm, L = 0.96 μH/ m and $\varepsilon_r = 1$

The inductance of an open wire line is given by

$$L = 9.21\times10^{-7}\log\frac{d}{a}$$

$$\log\frac{d}{a} = \frac{L}{9.21\times10^{-7}} = \frac{0.96\times10^{-6}}{9.21\times10^{-7}} = 1.0423$$

$$\frac{d}{a} = 10^{(1.0423)}$$

$$a = \frac{d}{10^{(1.0423)}}$$

$$= \frac{30.25\times10^{-3}}{10^{(1.0423)}} = 2.75\times10^{-3}$$

$$= 2.75 \text{ mm}$$

Diameter $= 2a = 2\times2.75\times10^{-3}$

$= 5.5$ mm

The capacitance of an open wire line is given by

$$C = \frac{12.07\,\varepsilon_r}{\log\frac{d}{a}}\times10^{-12}$$

Tamilnadu College Of Engineering

$$= \frac{12.07 \times 1 \times 10^{-12}}{\log \frac{30.25}{2.85}}$$

$$= 1.159 \times 10^{-11} \text{ F/}m$$

The characteristic impedance of an open wire line is given by

$$R_0 = 276.23 \log \frac{d}{a}$$

$$= 276.23 \log \frac{30.25}{2.75}$$

$$= 287.66\,\Omega$$

Example 40

Find R_0, L, C, V and λ for a coaxial line having $\frac{b}{a} = 10$ at 40 MHz if (i) $\varepsilon_r = 1$ (ii) $\varepsilon_r = 2.26$.

Solution:

Given that $\frac{b}{a} = 10$ and $f = 40 \times 10^6$ Hz

The characteristic impedance is given by (coaxial line)

$$R_0 = \frac{138.22}{\sqrt{\varepsilon_r}} \log \frac{b}{a}$$

if $\varepsilon_r = 1$

$$R_0 = 138.22 \log 10$$

$$= 138.22\,\Omega$$

Tamilnadu College Of Engineering

if $\varepsilon_r = 2.26$

$$R_0 = \frac{138.22}{\sqrt{2.26}} \log 10$$

$$= 91.94\,\Omega$$

The inductance of a coaxial line is given by

$$L = 4.61 \times 10^{-7} \log \frac{b}{a}$$

$$= 4.61 \times 10^{-7} \log 10 = 0.461 \times 10^{-6}$$

$$= 0.461\,\mu H/m \text{ for both } \varepsilon_r = 1 \text{ and } \varepsilon_r = 2.26$$

The capacitance of a coaxial line is given by

$$C = \frac{24.13 \times 10^{-12}\,\varepsilon_r}{\log \frac{b}{a}}$$

if $\varepsilon_r = 1$ $\quad C = \dfrac{24.13 \times 10^{-12} \times 1}{10} = 2.413 \times 10^{-12}$

$$= 2.413\,pF$$

if $\varepsilon_r = 2.26$

$$C = \frac{24.13 \times 10^{-12} \times 2.26}{10} = 54.53 \times 10^{-12}$$

$$= 54.53 \text{ pF}$$

The velocity of propagation is given by

$$v = \frac{c}{\sqrt{\varepsilon_r}} = \frac{3 \times 10^8}{\sqrt{\varepsilon_r}}$$

Tamilnadu College Of Engineering

if $\varepsilon_r = 1$

$$v = 3 \times 10^8 \ m/s$$

if $\varepsilon_r = 2.26$

$$v = \frac{3 \times 10^8}{\sqrt{2.26}}$$

$$= 2 \times 10^8 \ m/s$$

The wavelength is given by

$$\lambda = \frac{2\pi}{\beta} = \frac{2\pi}{\omega\sqrt{LC}} = \frac{v}{f}$$

if $\varepsilon_r = 1$

$$\lambda = \frac{3 \times 10^8}{40 \times 10^6}$$

$$= 7.5 \text{ m}$$

if $\varepsilon_r = 2.26$

$$\lambda = \frac{2 \times 10^8}{40 \times 10^6}$$

$$= 5 \text{ m}$$

Tamilnadu College Of Engineering

UNIT 3

IMPEDANCE MATCHING IN HIGH FREQUENCY LINES

3.1. INTRODUCTION

A transmission line is its role as a connecting links between a transmitter and an antenna or between an antenna and receiver, affect the efficiency of power transfer. In some cases they may be arranged to apportion a total power among a number of loads. Methods of adjusting the line impedance relations to achieve optimum results in these functions are discussed under the head of matching devices.

In communication networks, the elements of the network should be designed such that maximum power transfer takesplace between the source to the load. This means for maximum transfer of power between source and load, the resistance of the load should be equal to that of the source and the reactance of the load should equal to that of source but of opposite sign. That is when source is inductive, the load should be capacitive and vice versa. When this condition is achieved, it is usually referred to as impedance matching and the methods employed to achieve this are termed as impedance matching devices.

3.2 IMPEDANCE MATCHING

Transmission lines are considered to be impedance matching circuit designed to deliver maximum power from the transmitter to the antenna. If a line is not terminated in characteristic impedance (R_0) then part of the wave is reflected back to source and low power is delivered to the load.

Hence the impedance generally presented in the line will be

$$Z_s = Z_R = R_0$$

Ramanadu College of Engineering

Therefore, an impedance transformer is introduced in between the line input and the transmitter output to transform the characteristic impedance R_o into value needed for maximum transmitter power output.

Sometimes these transformers of impedance may consist of coupled coil of wire or of coil and condenser circuits specially at low frequencies. However in the higher frequencies region these impedance transformers usually consists of sections of transmission lines in the various arrangements. Some of the possible arrangements are,

i) Quarter wave transformer

ii) Stub matching

3.3 QUARTER WAVE TRANSFORMER

The length of transmission lines have certain properties which are of special interest for particular values of the length (s). In case of quarter wave transformer $s = \frac{\lambda}{4}$, where λ is the wavelength of the transmitted signal.

The expression for input impedance of a dissipationless line is,

$$Z_s = R_o \left[\frac{Z_R + j R_o \tan\beta s}{R_o + j Z_R \tan\beta s} \right]$$

Dividing both numerator and denominator by $\tan\beta s$

$$Z_s = R_o \left[\frac{\frac{Z_R}{\tan\beta s} + jR_o}{\frac{R_o}{\tan\beta s} + jZ_R} \right]$$

But $$\beta = \frac{2\pi}{\lambda}$$

Then $$Z_s = R_o \left[\frac{\frac{Z_R}{\tan\left(\frac{2\pi s}{\lambda}\right)} + j R_o}{\frac{R_o}{\tan\left(\frac{2\pi s}{\lambda}\right)} + jZ_R} \right]$$

Tamilnadu College Of Engineering

For quarter wave transformer $s = \frac{\lambda}{4}$

Therefore $$Z_s = R_o \left[\frac{\frac{Z_R}{\tan\frac{\pi}{2}} + jR_o}{\frac{R_o}{\tan\frac{\pi}{2}} + j\,Z_R} \right]$$

For quarter wave transformer $s = \frac{\lambda}{4}$

Therefore $$Z_s = R_o \left[\frac{\frac{Z_R}{\tan\frac{\pi}{2}} + j\,R_o}{\frac{R_o}{\tan\frac{\pi}{2}} + j\,Z_R} \right]$$

where $\tan\frac{\pi}{2} = \infty$ and $\frac{1}{\infty} = 0$

$$Z_s = R_o \left[\frac{jR_o}{jZ_R} \right]$$

$$Z_s = \frac{R_0^2}{Z_R}$$

Thus the input impedance of the line is equal to the square of R_o of the line divided by the load impedance. The impedance matching can be obtained by

$$R_o = \sqrt{Z_s\,Z_R}$$

Applications of quarter wavelength transformer

i) A quarter wave line may be considered as an **'impedance inverter'** in that it can transform a low impedance into a high impedance and vise versa.

ii) It also used to couple a transmission line to a resistive load, such as an antenna.

iii) The short circuited quarter wave line acts as an insulator to support an open wire line or centre conductor of a coaxial line as shown in figure 3.1. Such lines are sometimes referred to as **'copper insulator'**.

Tamilnadu College Of Engineering

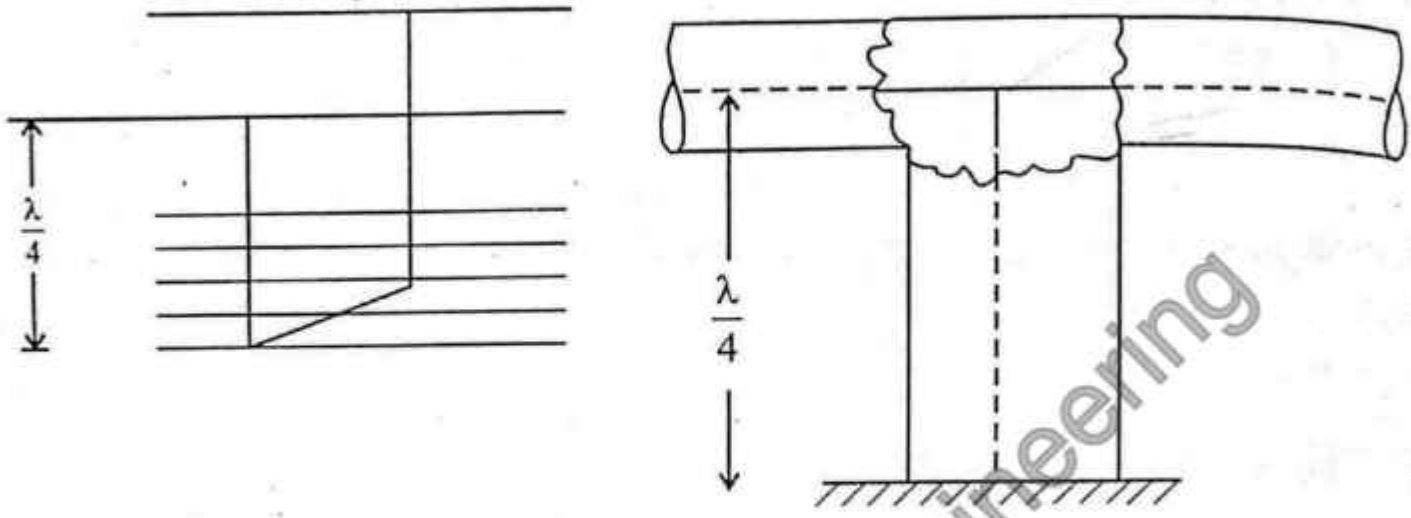

Figure 3.1 Quarter wave lines as insulator

iv) A quarter wave transformer may also be used if the load is not pure resistive. For this application the characteristic impedance should be $R_o^1 = R_o\sqrt{\frac{1}{s}}$.

Disadvantage

It is sensitive to change in frequency.

3.4 IMPEDANCE MATCHING BY STUBS

A section of transmission line can be used as matched section by inserting them between load and the source, as seen in quarter wave line. Besides it is also possible to connect sections of open or short circuited line known as stub or tuning stub in shunt with the main line at a certain point to effect the matching. The matching with the help of tuning stub or stub is called stub matching and is having the following advantage

i) Length (s) and characteristic impedance (R_o) remains unchanged.

ii) Mechanically, it is possible to add adjustable susceptance in shunt with the line.

Types of stub matching are,

a) Single stub matching

b) Double stub matching

Tamilnadu College Of Engineering

3.5 SINGLE STUB MATCHING

A type of transmission line frequently employed for single stub matching is shown in figure 3.2. The principle element of this transformer is a short circuited section of line whose open end connected to the main line at a particular distance from the load end. The input conductance at that point is equal to the characteristic conductance of the line. The stub length is adjusted to provide a susceptance which is equal in value but opposite in sign, to the input susceptance of the main line at that point, so that the total susceptance at the point of attachment is zero. The combination of stub and line will thus present a conductance which is equal to the characteristic conductance of the line.

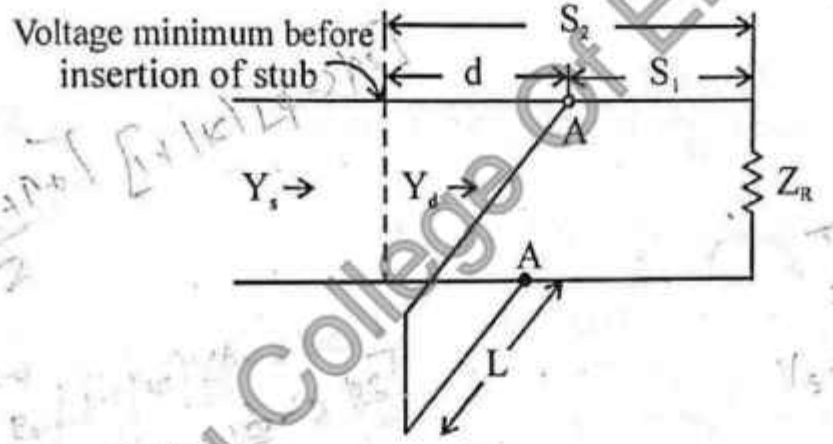

Figure 3.2 Single stub matching

The expression for input impedance of any point on the line is

$$Z_s = R_o\left[\frac{1+|K|\angle\phi-2\beta s}{1-|K|\angle\phi-2\beta s}\right]$$

Therefore input admittance is given by

$$Y_s = \frac{1}{Z_s} = G_o\left[\frac{1-|K|\angle\phi-2\beta s}{1+|K|\angle\phi-2\beta s}\right] \text{ where } \frac{1}{R_o} = G_o$$

For changing the above equation to rectangular coordinates

$$Y_s = G_o\left[\frac{1-|K|\cos(\phi-2\beta s)-j|K|\sin(\phi-2\beta s)}{1+|K|\cos(\phi-2\beta s)+j|K|\sin(\phi-2\beta s)}\right]$$

Tamilnadu College Of Engineering

By taking complex conjugate multiplication

$$Y_s = G_o\left[\frac{1-|K|^2-2j|K|\sin(\phi-2\beta s)}{1+|K|^2+2|K|\cos(\phi-2\beta s)}\right]$$

Real part of above equation gives shunt conductance (G_s).

$$G_s = G_o\left[\frac{1-|K|^2}{1+|K|^2+2|K|\cos(\phi-2\beta s)}\right]$$

Imaginary part is represents shunt susceptance (B_s).

$$B_s = G_o\left[\frac{-2|K|\sin(\phi-2\beta s)}{1+|K|^2+2|K|\cos(\phi-2\beta s)}\right]$$

At 'S_2' the ratio $\frac{G_s}{G_o}$ is maximum (voltage minimum) and the cosine angle value is – 1. Therefore $\cos(\phi-2\beta S_2) = -1$

$$\phi - 2\beta S_2 = -\pi \quad \text{where } \cos^{-1}(-\theta) = \cos^{-1}\theta - \pi$$

$$S_2 = \frac{\phi+\pi}{2\beta}$$

At distance 'S_1' from load the ratio $\frac{G_s}{G_o} = 1$. Therefore

$$1 = \frac{1-|K|^2}{1+|K|^2+2|K|\cos(\phi-2\beta S_1)}$$

$$1+|K|^2+2|K|\cos(\phi-2\beta S_1) = 1-|K|^2$$

$$\cos(\phi-2\beta S_1) = -|K|$$

$$\phi - 2\beta S_1 = \cos^{-1}(-|K|) = \cos^{-1}|K| - \pi \quad \text{where}$$

$\cos^{-1}(-\theta) = \cos^{-1}\theta - \pi$

$$S_1 = \frac{\phi+\pi-\cos^{-1}|K|}{2\beta}$$

Tamilnadu College Of Engineering

The distance 'd' from voltage minimum to the point of stub connection is

$$d = S_2 - S_1 = \frac{\cos^{-1}|K|}{2\beta}$$

When $\phi - 2\beta s = \pi + \cos^{-1}|K|$, the input susceptance of the line is at stub location nearest to the load. Therefore

$$B_s = G_o\left[\frac{-2|K|\sin(\pi + \cos^{-1}|K|)}{1 + |K|^2 + 2|K|\cos(\pi + \cos^{-1}|K|)}\right]$$

But $\sin(\pi + \theta) = \sin\theta$ and $\cos(\pi + \theta) = -\cos\theta$, $\sin\theta = \sqrt{1 - \cos^2\theta}$

Let $\cos^{-1} - |K| = \theta$ and $-|K| = \cos\theta$. Therefore

$$B_s = G_o\left[\frac{-2|K|\sqrt{1 - |K|^2}}{1 - |K|^2}\right]$$

A short circuited stub is ordinarly preferred to an open circuited stub because easy of construction and low loss.

The susceptance of a short circuited stub is

$$B_s = \frac{-G_o}{\tan\beta L}$$

The length of the short circuited stub is

$$-\frac{G_o}{\tan\beta L} = G_o\left[\frac{-2|K|\sqrt{1 - |K|^2}}{1 - |K|^2}\right]$$

$$\tan\beta L = \frac{1 - |K|^2}{2|K|\sqrt{1 - |K|^2}}$$

$$L = \frac{\lambda}{2\pi}\tan^{-1}\frac{\sqrt{1 - |K|^2}}{2|K|} \quad \text{where } \beta = \frac{2\pi}{\lambda}$$

Tamilnadu College Of Engineering

Disadvantages of single stub matching

(i) It is applicable for single frequency.

(ii) It is possible only in open wire line.

3.6 DOUBLE STUB MATCHING

The two disadvantages of the single stub matching are overcome by using double stub matching as shown in figure 3.3. In which position of the two stubs AB and CD are arbitrary but the two stub lengths are adjustable. The spacing between two stub is 0.375λ or $\frac{\lambda}{4}$. Half wavelength $\frac{\lambda}{2}$ spacing is avoided as it places the two stubs in parallel, as result only one effective adjustment is available. The same difficulties are encountered if the two stubs are close together. The separation of 0.375 or $\frac{3}{8}\lambda$ is an optimum.

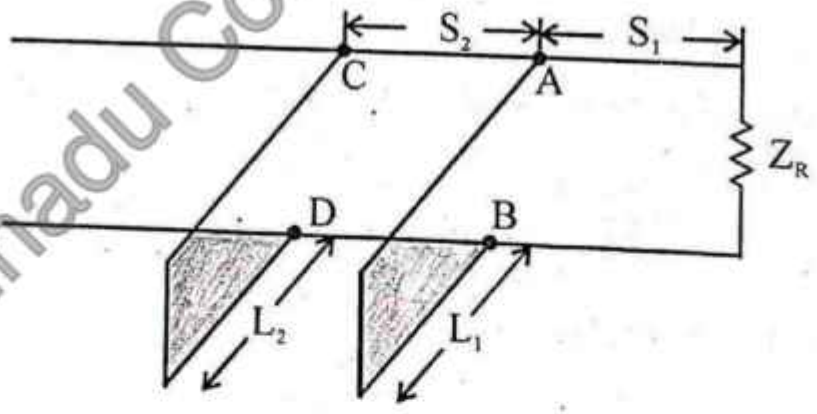

Figure 3.3 Double stub matching

If the first stub whose length is L_1 is located at AB at distance of S_1 from the load, the normalized input admittance is given by,

$$Y_{s(AB)} = \frac{Y_r + j\tan\beta S_1}{1 + j\,Y_r\tan\beta S_1}$$

Tamilnadu College Of Engineering

By taking complex conjugate multiplication

$$Y_{s(AB)} = G_{s(AB)} + jB_{s(AB)} = \frac{Y_r \sec^2 \beta S_1}{1 + Y_r^2 \tan^2 \beta S_1} + j\frac{(1 - Y_r^2)\tan\beta S_1}{1 + Y_r^2 \tan \beta S_1}$$

For second located at CD, normalized input admittance is,

$$Y_{s(CD)} = G_{s(CD)} + j\,B_{s(CD)}$$

Here only the susceptance value is changed by the addition of the stub, while the conductance part remains unchanged. That is

$$G_{s(AB)} = G_{s(CD)}$$

It may be noted that two stubs are usually at fixed points normally separated by a distance of 0.375λ. The stub AB nearest to the load is adjusted to make the real part of the admittance at the point CD equal to the characteristic conductance of the line, in absence of the second stub(AB). This stub(AB) is then adjusted to produce zero susceptance at the point CD.

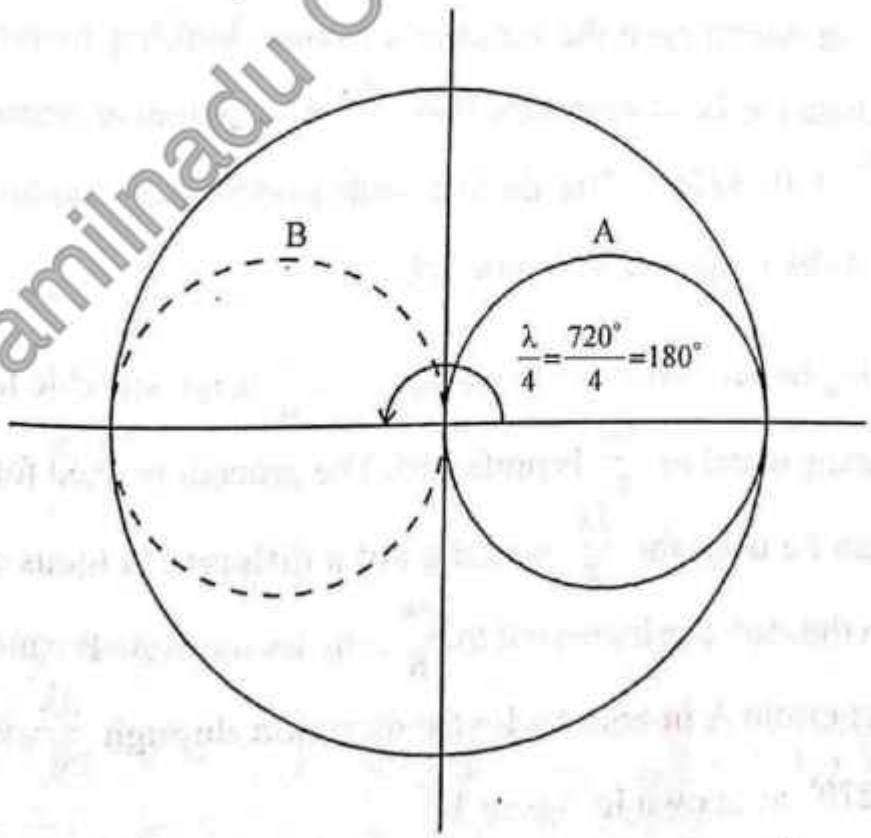

Figure 3.4 Double stub impedance matching with $\frac{\lambda}{4}$ separation stubs

Tamilnadu College Of Engineering

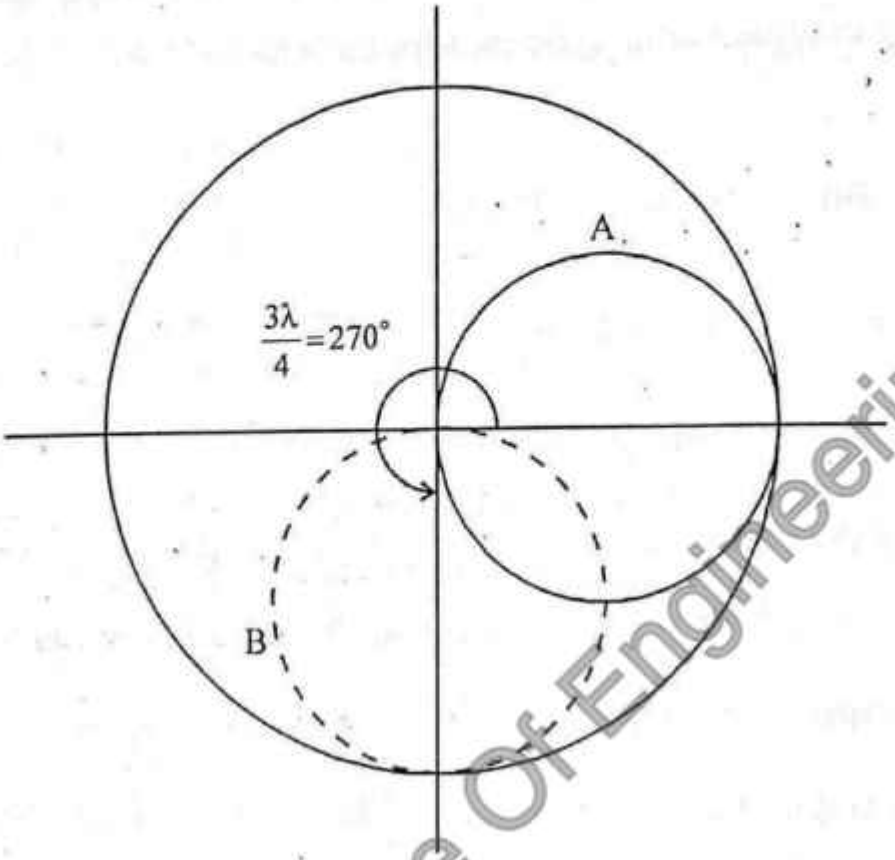

Figure 3.5 Double stub impedance matching with $\frac{3\lambda}{8}$ separation stubs

Here two stubs are used for the location and adjustment. The distance is more than or equal to $\frac{\lambda}{2}$, in which case the input admittance looking towards the load repeats itself. The distance is always less than $\frac{\lambda}{2}$. The distance chosen is either $\frac{\lambda}{4} = (0.25\lambda)$ or $\frac{3\lambda}{8} = (0.375\lambda)$. The double stub impedance matching with $\frac{\lambda}{4}$ separation between stubs is shown in figure 3.4.

When the spacing between the two stubs equal to $\frac{\lambda}{4}$ is not suitable for particular application, stub spacing equal to $\frac{3\lambda}{8}$ is preferred. The procedure used for $\frac{\lambda}{4}$ spacing between the stubs can be used for $\frac{3\lambda}{8}$ spacing but a different is locus circle B. As the distance between the stub has increased to $\frac{3\lambda}{8}$, the locus circle B can be obtained by rotating the locus circle A in anticlockwise direction through $\frac{3\lambda}{8}$ wavelength. That is $\frac{3(720^\circ)}{8} = 270^\circ$ as shown in figure 3.5

Tamilnadu College Of Engineering

Advantages of double stub matching

(i) It is applicable for more than one frequency .

(ii) It is possible in both open wire line and coaxial line.

3.7 SMITH CHART

The Smith chart is the most commonly used graphical technique for analysing a dissipationless line. A Smith chart is obtained by the superposition of constant resistance circles (r_a circles) and constant reactance circles (x_a circles). The Smith chart is basically a polar plot of reflection coefficient K. In Smith chart resistive and reactive components are in circular form, so it is also known as circular chart.

The reflection coefficient of the line is given by

$$K = \frac{Z_R - R_o}{Z_R + R_o} = \frac{\frac{Z_R}{R_o} - 1}{\frac{Z_R}{R_o} + 1}$$

Where the normalized impedance $Z_r = \frac{Z_R}{R_o}$. Therefore

$$K = \frac{Z_r - 1}{Z_r + 1}$$

$$K\,(Z_r + 1) = Z_r - 1$$

$$K\,Z_r + K = Z_r - 1$$

$$K\,Z_r - Z_r = -(1 + K)$$

$$Z_r\,(K - 1) = -(1 + K)$$

$$Z_r = \frac{1 + K}{1 - K}$$

Basically the normalized impedance is a complex quantity. Therefore

$$Z_r = r_a + j\,x_a = \frac{1 + |K| \angle \phi - 2\,\beta s}{1 - |K| \angle \phi - 2\beta s} = \frac{1 + (U + jV)}{1 - (U + j\,V)}$$

$$= \frac{1 + U + jV}{1 - U - j\,V}$$

Tamilnadu College Of Engineering

By taking complex conjugate multiplication

$$= \frac{1+U+jV}{1-U-jV} \times \frac{1-U+jV}{1-U+jV}$$

$$= \frac{1-U^2-V^2+j2V}{(1-U)^2+V^2}$$

Equating real and imaginary parts,

$$r_a = \frac{1-U^2-V^2}{(1-U)^2+V^2} \quad \text{... (1)}$$

$$x_a = \frac{2V}{(1-U)^2+V^2} \quad \text{... (2)}$$

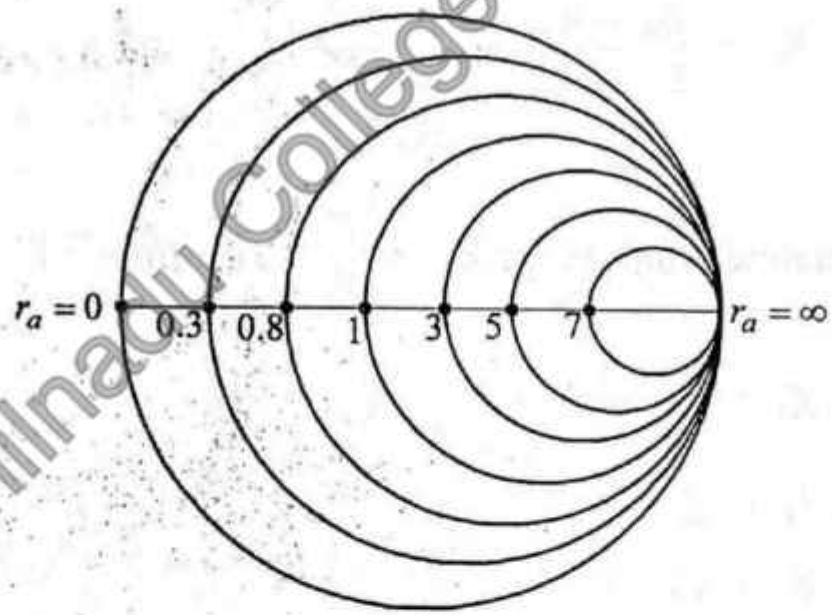

Figure 3.6 Constant r_a circles

From equation (1)

$$r_a[(1-U)^2+V^2] = 1-U^2-V^2$$

$$r_a[1-2U+U^2+V^2] = 1-U^2-V^2$$

$$U^2(r_a+1) - 2Ur_a + V^2(r_a+1) = 1-r_a$$

Tamilnadu College Of Engineering

Dividing both sides of the equation by $(1 + r_a)$

$$U^2 - 2U\left(\frac{r_a}{1+r_a}\right) + V^2 = \frac{1-r_a}{1+r_a}$$

Adding both sides of equation by $\left(\frac{r_a}{1+r_a}\right)^2$

$$U^2 - 2U\left(\frac{r_a}{1+r_a}\right) + \left(\frac{r_a}{1+r_a}\right)^2 V^2 = \frac{1-r_a}{1+r_a} + \left(\frac{r_a}{1+r_a}\right)^2 = \frac{(1-r_a)(1+r_a)+r_a^2}{1+r_a^2}$$

$$\left[U - \left(\frac{r_a}{1+r_a}\right)\right]^2 + V^2 = \frac{1}{(1+r_a)^2} \text{ which likes } x^2 + y^2 = r^2$$

This equation represents a family of constant r_a circles having centre at $\left(\frac{r_a}{1+r_a}, 0\right)$ and radii of $\frac{1}{1+r_a}$.

Similarly by solving equation (2)

$$x_a[(1-U)^2 + V^2] = 2V$$

$$x_a[1 - 2U + U^2 + V^2] - 2V = 0$$

$$(U^2 - 2U + 1)x_a + V^2 x_a - 2V = 0$$

Dividing all terms by x_a

$$(U^2 - 2U + 1) + V^2 - \frac{2V}{x_a} = 0$$

$$(U-1)^2 + V^2 - \frac{2V}{x_a} = 0$$

Tamilnadu College Of Engineering

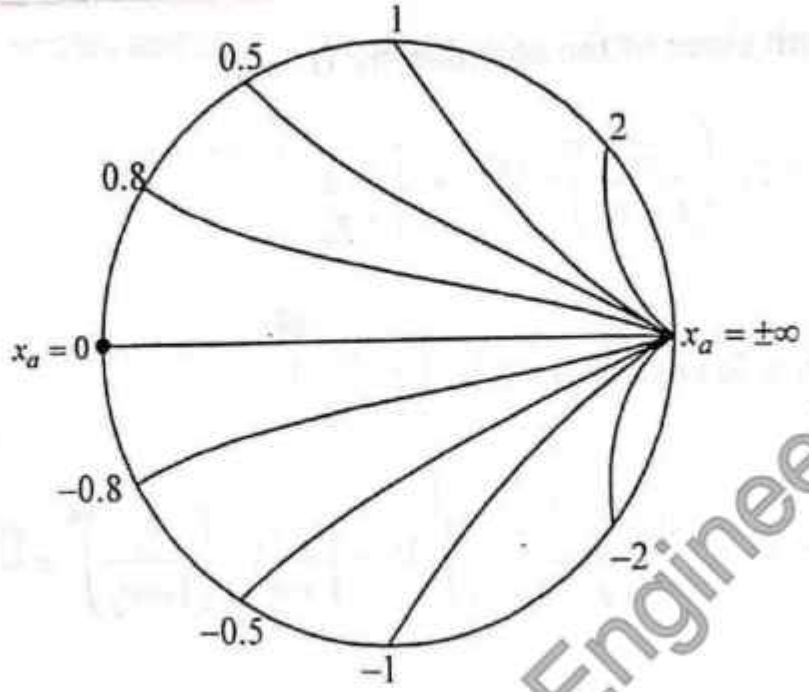

Figure 3.7 Constant x_a circles

Adding both side of equation by $\frac{1}{x_a^2}$,

$$(U-1)^2 + V^2 - \frac{2V}{x_a} + \frac{1}{x_a^2} = \frac{1}{x_a^2}$$

$$(U-1)^2 + \left(V - \frac{1}{x_a}\right)^2 = \frac{1}{x_a^2}$$

This equation represents a family of constant x_a circles having centre at $\left(1, \frac{1}{x_a}\right)$ and radii of $\frac{1}{x_a}$.

The figures 3.6 and 37 represents the constant r_a circles and constant x_a circles respectively. Apart from the r_a and x_a circles, we can draw the S circles or constant standing wave ratio circles, which are centered at the origin with S varying from 1 to ∞.

3.7.1 Properties of Smith Chart

i) It consist of constant r_a circles and constant x_a circles superpositioned on one chart. The value of r_a and x_a are normalized $\left[Z_r = \frac{Z_R}{R_o}\right]$.

Tamilnadu College Of Engineering

ii) The horizontal line passing through centre of smith chart represents real axis.

iii) If $x_a > 0$ (inductive reactance) lie above real axis and $x_a < 0$ (capacitive reactance) lie below real axis and $x_a = 0$ become real axis.

iv) The $(r_a = 1, x_a = 0)$ point is a origin point of a graph and the corresponding $r_a = 1$ circle is called unit circle.

v) The extreme left of Smith chart along real axis ($r_a = 0$ and $x_a = 0$) indicates zero impedance or short circuited connection and the extreme right of Smith chart along real axis ($r_a = \infty$ and $x_a = \infty$) indicates infinite impedance or open circuited connection.

vi) On periphery of Smith chart three scales are provided. The outermost scale (clockwise movement) is used to calculate the distance of the stub from load towards generator.

vii) The next scale (anticlockwise movement) is used to calculate the distance of the stub from generator towards load.

viii) The innermost scale is used to determine the angle of reflection coefficient.

3.7.2 Applications of Smith chart

i) It is used to find input impedance of a transmission line.

ii) It is used to find reflection coefficient.

iii) It is useful for finding impedance from admittance and viceversa.

iv) It is used to find standing wave ratio.

v) It is used to design stub for impedance matching.

Tamilnadu College Of Engineering

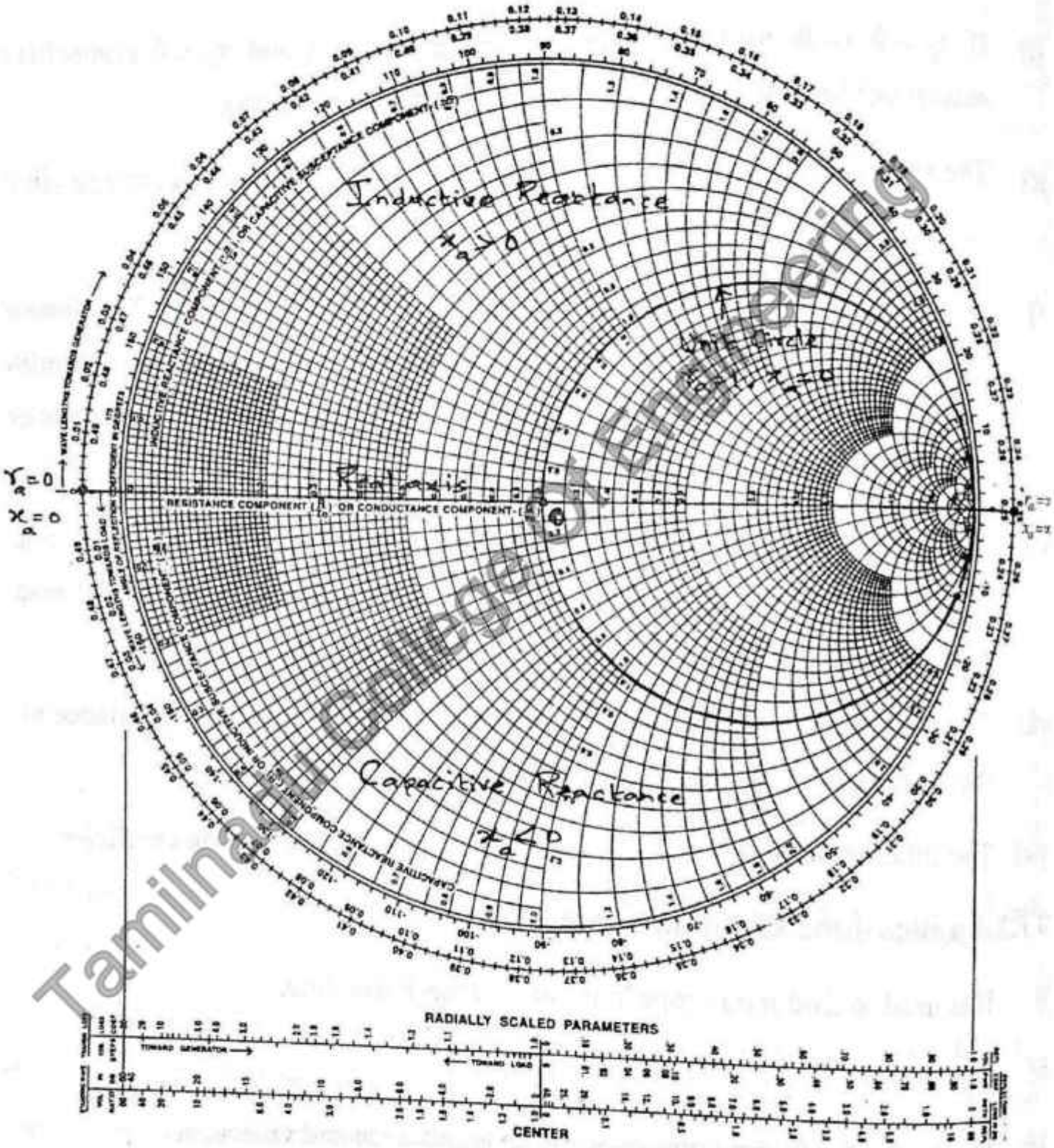

SMITH CHART

Figure 3.8 Properties of Smith chart

Tamilnadu Engineering

3.8 SOLUTION OF PROBLEMS USING SMITH CHART

Example 1

A 70 Ω lossless line is used at a frequency of 300 MHz terminated by a load of (140 + j 91) Ω. Find the reflection coefficient, VSWR using Smith chart.

Solution :

Given that $Z_R = 140 + j91\Omega$ and $R_o = 70\Omega$

i) The normalized load impedance is given by,

$$Z_r = \frac{Z_R}{R_o} = \frac{140 + j91}{70} = 2 + j1.3$$

ii) The load point is loacted at point A which is intersection of $r_a = 2$ circle and $x_a = 1.3$ circle.

iii) Draw a circles with O at origin and radius equal to OA. This is called constant S circle.

iv) The constant S circle cuts the right hand side of the horizontal axis at B where reading is 3.

Thus $S = VSWR = 3$

v) Extend line OA to point C at periphery. The angle corresponding is the phase angle ϕ of the reflection coefficient.

$$\phi = 29^\circ$$

vi) Draw an arc with radius equal to OA on a line for reflection coefficient at the lower side of chart. This arc cuts horizontal line at D where |K| value is obtained.

$$|K| = 0.5$$

vii) The reflection coefficient is given by

$$K = |K| \angle \phi = 0.5 \angle 29^\circ$$

Tamilnadu College Of Engineering

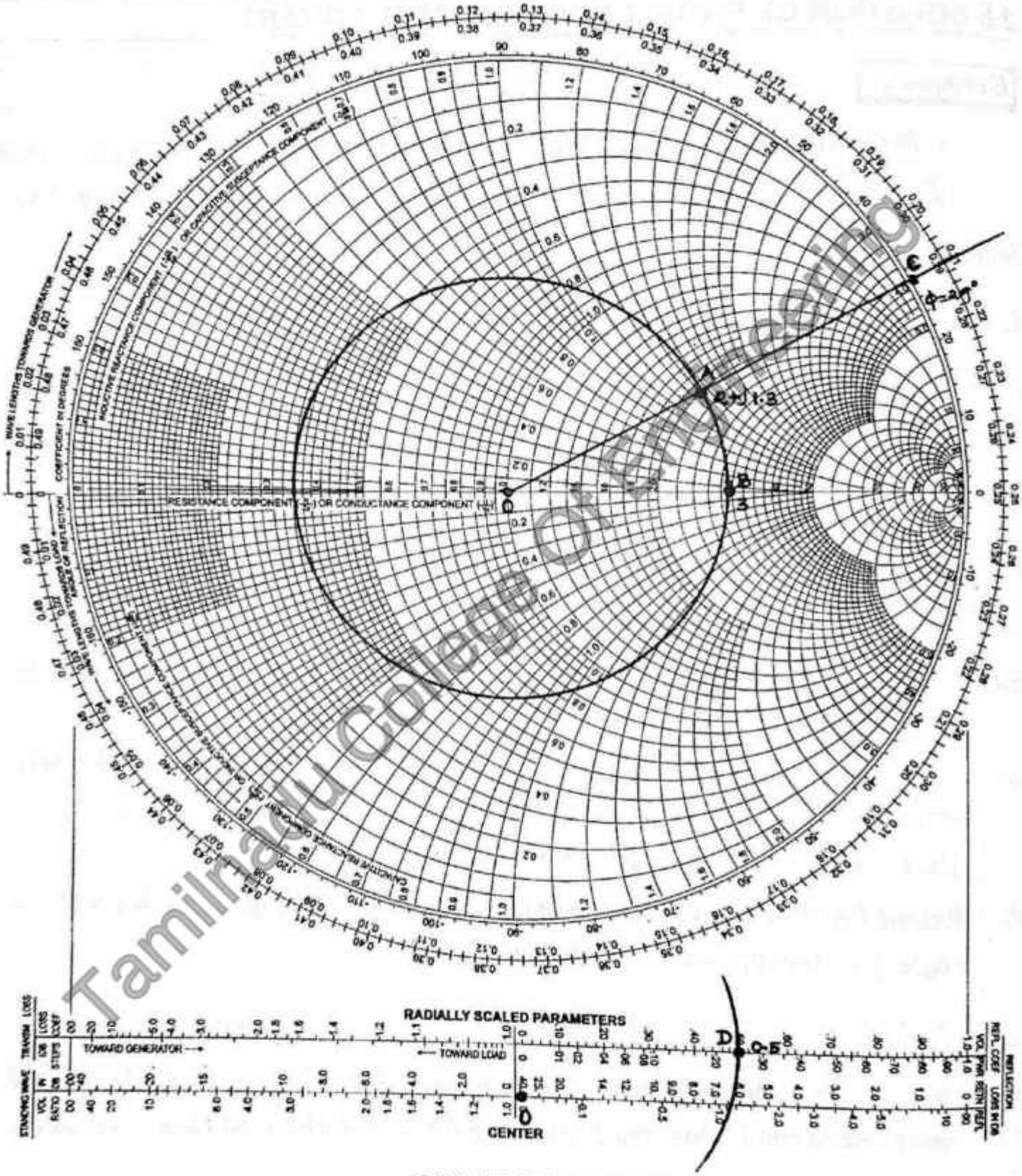

SMITH CHART

Example 1

Tamilnadu College of Engineering

Example 2

A transmission line with a characteristic impedance 100 Ω is terminated in impedance (50 – j 200) Ω. Determine the VSWR and reflection coefficient at the terminal load end of the line using Smith chart.

Solution :

Given that $Z_R = 50 - j\,200\,\Omega$ and $R_o = 100\Omega$

i) The normalized load impedance is given by,

$$Z_r = \frac{Z_R}{R_o} = \frac{50 - j200}{100} = 0.5 - j2$$

ii) The load point is located at point A which is intersection of $r_a = 0.5$ circle and $x_a = -2$ circle.

iii) Draw a circle with O at origin and radius equal to OA. This is called constant S circle.

iv) The constant S circle cuts the right hand side of the horizontal axis at B where reading is 10.

Thus $S = VSWR = 10$

v) Extend line OA to point C at periphery. The angle corresponding is the phase angle ϕ of the reflection coefficient.

$$\phi = -51^\circ$$

vi) Draw an arc with radius equal to OA on a line for reflection coefficient at the lower side of chart. This arc cuts horizontal line at D where $|K|$ value is obtained.

$$|K| = 0.82$$

vii) The reflection coefficient is given by

$$K = |K| \angle\phi = 0.82 \angle -51^\circ$$

Tamilnadu College Of Engineering

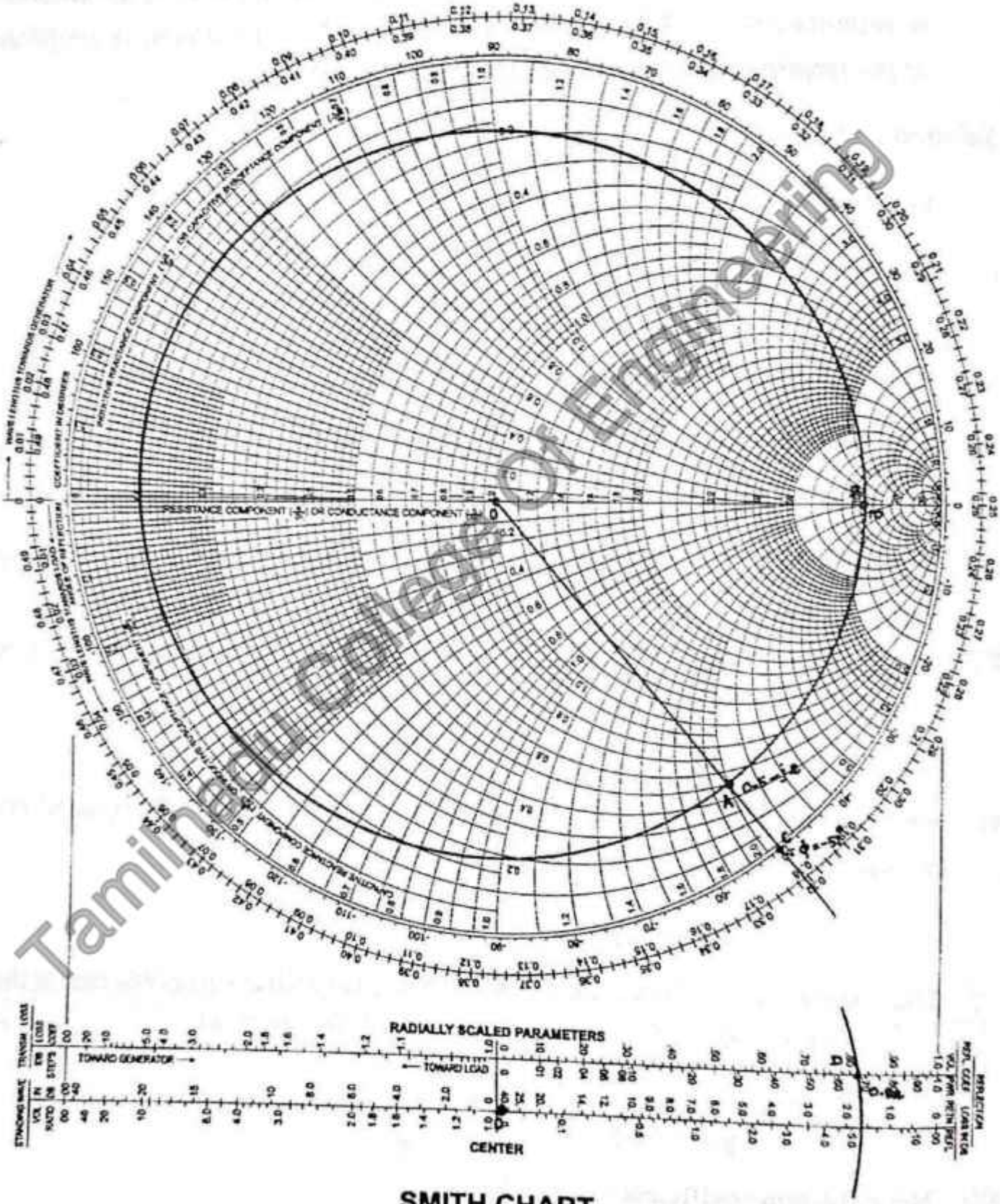

SMITH CHART

Example 2

Tamilnadu College of Engineering

Example 3

A low loss line with $R_o = 70\Omega$ is terminated at an impedance of $Z_R = 115 - j\,80\,\Omega$. The wavelength of transmission line is 2.5m. Using Smith chart find the following.

a) Load admittance.

b) Standing wave ratio

c) Maximum and minimum line impedance.

d) Distance between the load and first voltage minimum.

Solution :

Given that $Z_R = 115 - j\,80\,\Omega$, $R_o = 70\,\Omega$ and $\lambda = 2.5m$

i) The normalized load impedance is given by,

$$Z_r = \frac{Z_R}{R_o} = \frac{115 - j80}{70} = 1.64 - j\,1.14$$

ii) The load point is located at point A which is intersection of $r_a = 1.64$ circle and $x_a = -1.14$ circle.

iii) Draw a circle with O at origin and radius equal to OA. This is called constant S circle.

iv) The point B diametrically opposite to the point A on the constant S circle is the admittance of the load, which is normalized with respect to the characteristic impedance.

$$YR_o = 0.41 + j\,0.31$$

Therefore $$Y = \frac{0.41 + j0.31}{70} = 0.0058 + j\,0.0044\,℧$$

v) The constant S circle cuts the right hand side of the horizontal axis at C where reading is 2.6.

Thus $$S = VSWR = 2.6$$

Therefore maximum normalized impedance = 2.6 + j 0

Thus maximum line impedance = $70 \times 2.6 = 182\,\Omega$

vi) The constant S circle cuts the left hand side of the horizontal axis at D where reading is 0.38. Therefore minimum normalized line impedance = 0.38 + j 0.

Thus minimum line impedance = $70 \times 0.38 = 26.6\,\Omega$

Tamilnadu College Of Engineering

vii) The first voltage minimum from the load lies along the horizontal axis at E. Extend line OA to point F at periphery. Now the distance between the point E and F is 0.198 λ

viii) The distance between the load and first voltage minimum is given by

$$0.198\lambda = 0.198 \times 2.5 = 0.495m$$

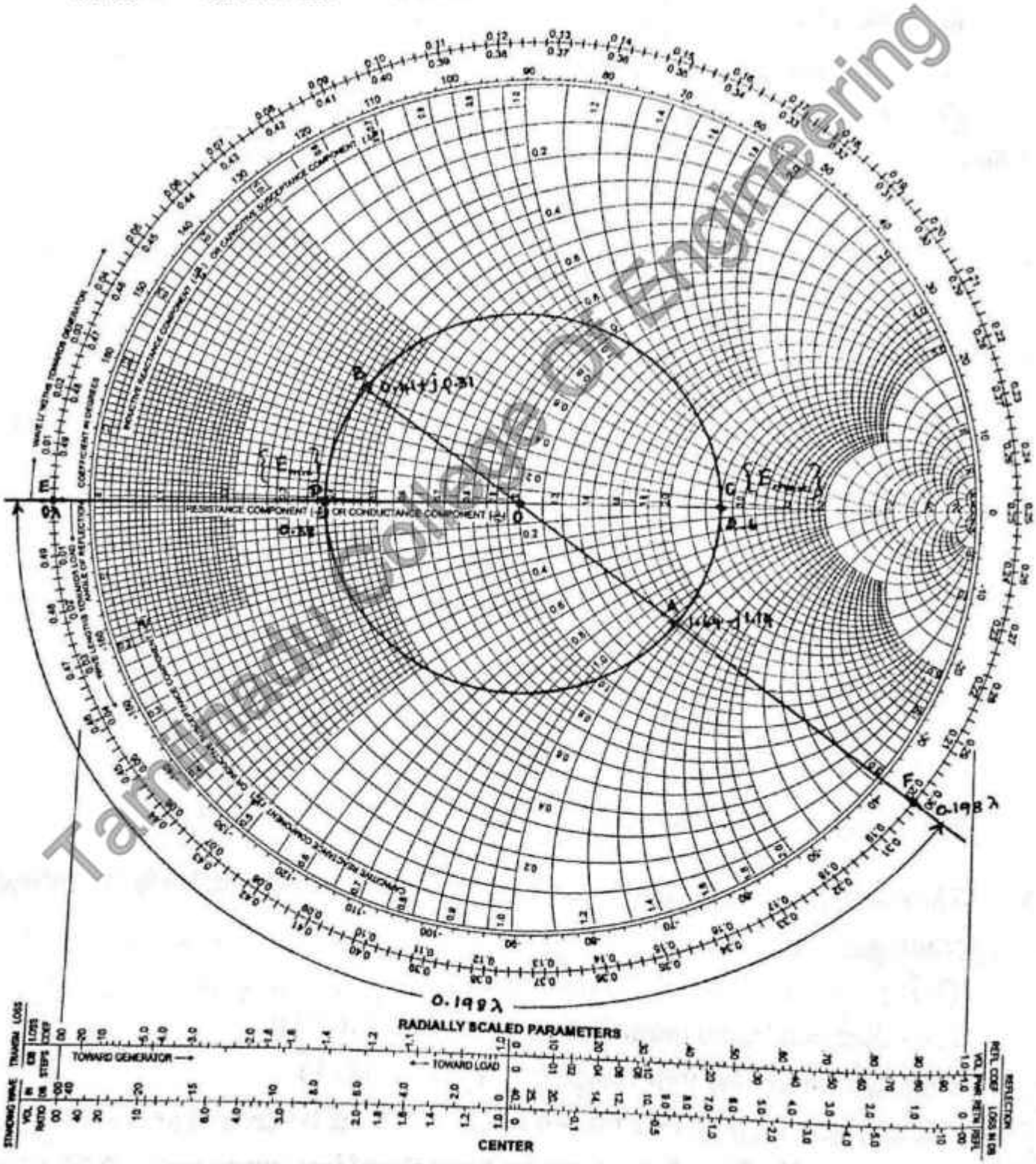

SMITH CHART

Example 3

Tamilnadu College of Engineering

Example 4

A lossless line with is terminating at an impedance of 50 + j 50 Ω. The frequency of transmission line is 300 MHz. Using Smith chart find the following.

a) Load admittance.

b) Standing wave ratio.

c) Maximum and minimum line impedance.

d) Distance between the load and first voltage minimum.

Solution :

Given that $Z_R = 50 + j\,50\ \Omega$, $R_o = 50\Omega$ and $f = 300\times10^6\,Hz$

i) The normalized load impedance is given by,

$$Z_r = \frac{Z_R}{R_o} = \frac{50 + j50}{50} = 1 + j\,1$$

ii) The load point is located at point A which is intersection of $r_a = 1$ circle and $x_a = 1$ circle.

iii) Draw a circle with O at origin and radius equal to OA. This is called constant S circle

iv) The point B diametrically opposite to the point A on the constant S circle is the admittance of the load, which is normalized with respect to R_o.

$$YR_o = 0.5 - j\,0.5$$

Therefore $Y = \dfrac{0.5 - j\,0.5}{50} = 0.01 + j\,0.01℧$

Tamilnadu College Of Engineering

v) The constant S circle cuts the right hand side of the horizontal axis at C where reading is 2.5.

Thus $S = VSWR = 2.5$

Therefore maximum normalized impedance = 2.5 + j 0

Thus maximum line impedance = $50 \times 2.5 = 125\ \Omega$

vi) The constant S circle cuts the left hand side of the horizontal axis at D where reading is 0.4. Therefore minimum normalized line impedance = 0.4 + j0. Thus minimum line impedance = $50 \times 0.4 = 20\ \Omega$

vii) The first voltage minimum from the load lies along the horizontal axis at E. Extend line OA to point F at periphery. Now the distance between the points E and F is 0.338λ.

viii) The wavelength is given by

$$\lambda = \frac{C}{f} = \frac{3 \times 10^8}{300 \times 10^6} = 1m$$

ix) The distance between the load and first voltage minimum is given by,

$$0.338\lambda = 0.338 \times 1 = 0.338m$$

Tamilnadu College Of Engineering

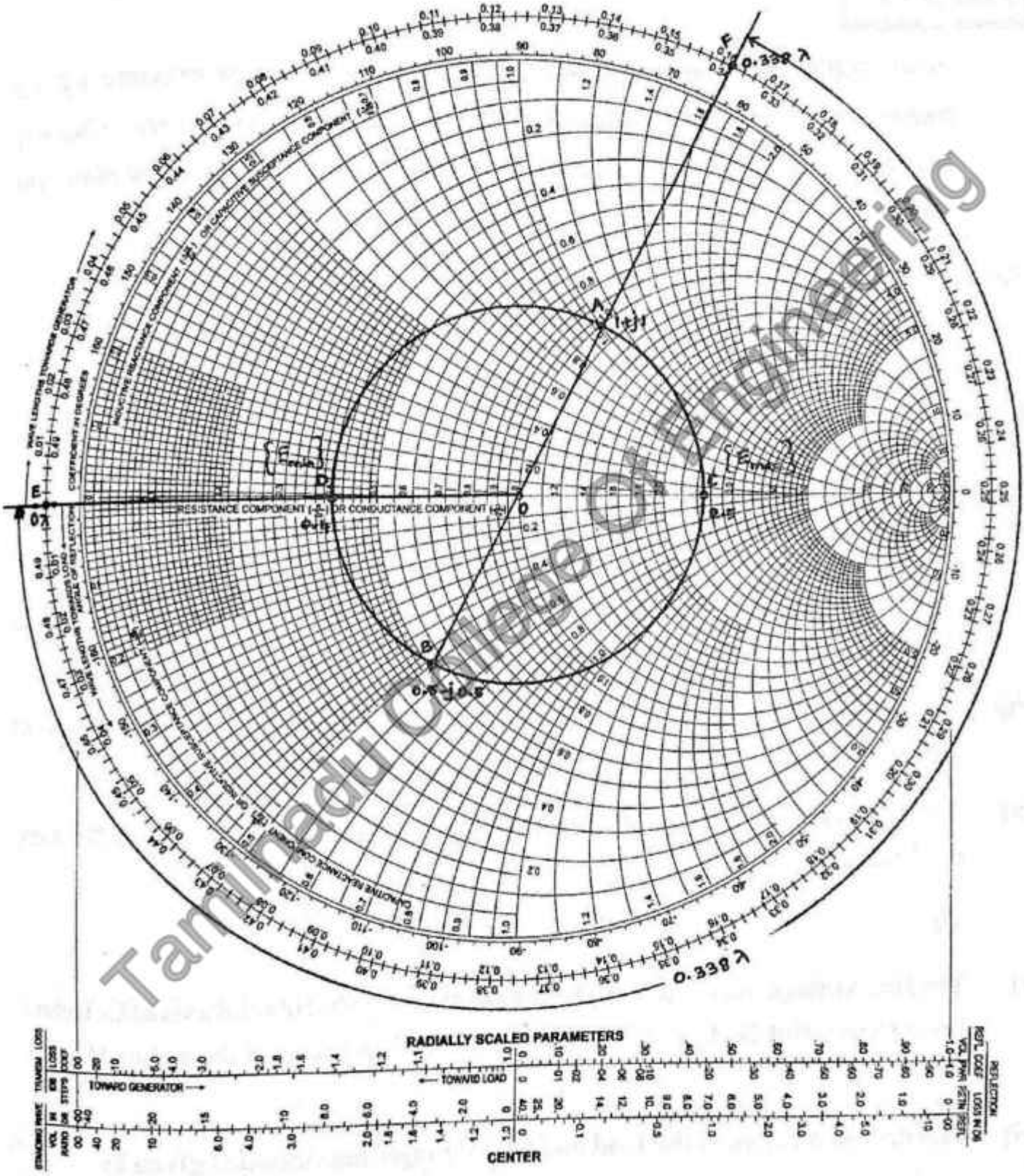

SMITH CHART

Example 4

Tamilnadu Open University

Example 5

Find VSWR and distance between load and first voltage maximum for a transmission line with characteristic impedance of 50 with a receiving end impedance of 100 + j 120. The wavelength of the electrical signal along the line is 2.5m.

Solution :

Given that $Z_R = 100 + j120\,\Omega$, $R_o = 50\,\Omega$ and $\lambda = 2.5\,m$

i) The normalized load impedance is given by,

$$Z_r = \frac{Z_R}{R_o} = \frac{100 + j\,120}{50} = 2 + j\,2.4$$

ii) The load point is located at point A which is intersection of $r_a = 2$ circle and $x_a = 2.4$ circle.

iii) Draw a circle with O at origin and radius equal to OA. This is called constant S circle.

iv) The constant S circle cuts the right hand side of the horizontal axis at B where reading is 5.

Thus $S = VSWR = 5$

v) The first voltage maximum from the load along the horizontal axis at C. Extend line OA to point D at periphery. Now the distance between the points C and D is 0.04λ.

vi) The distance between the load and first voltage maximum is given by.

$$0.04\lambda = 0.04 \times 2.5 = 0.1\,m$$

Tamilnadu College Of Engineering

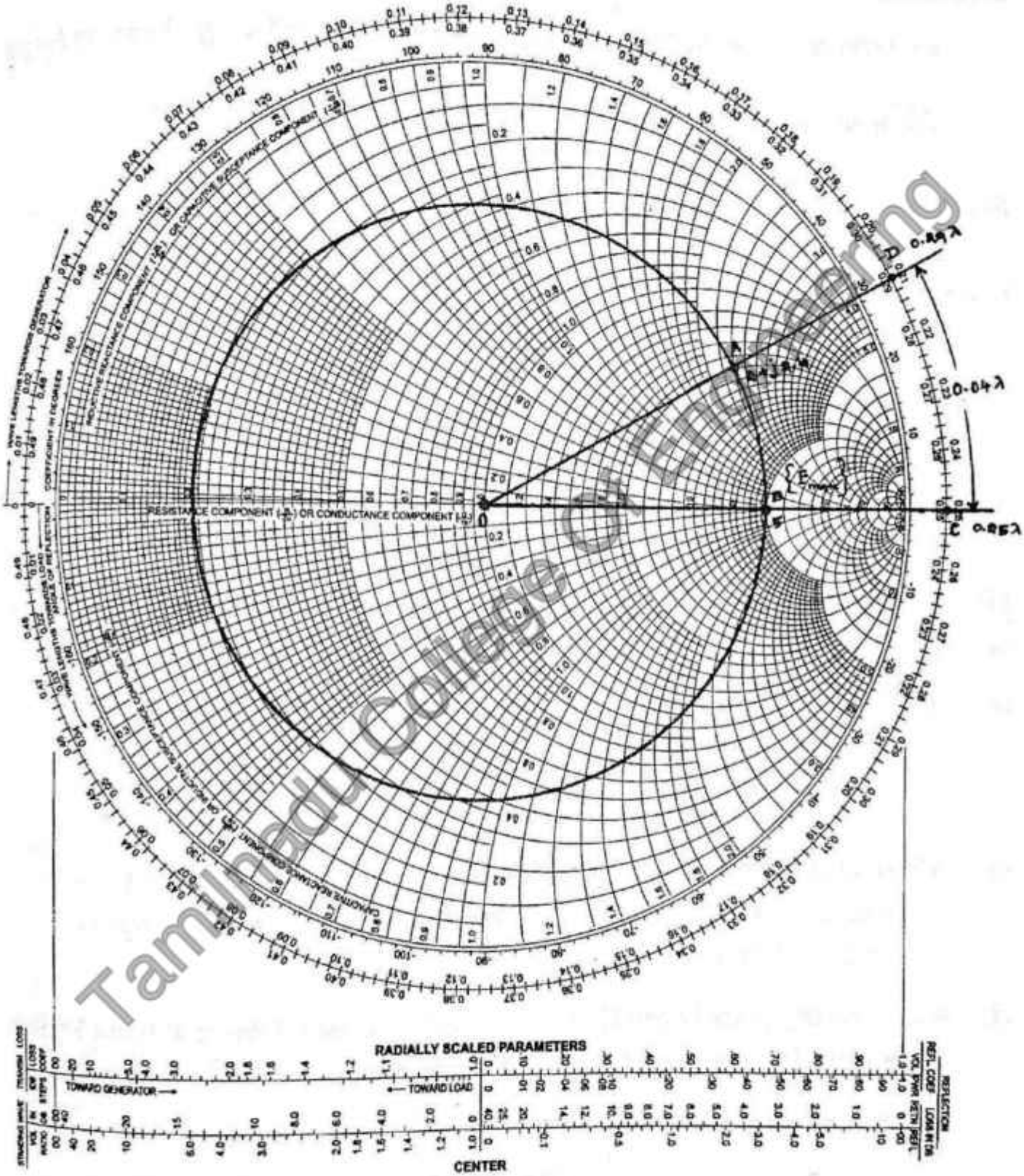

SMITH CHART

Example 5

Tamilnadu College of Engineering

Example 6

Determine the input impedance of the transmission line of electrical length 28° with terminated load of $\frac{Z_R}{R_o} = 2.6 + j1$. Use Smith chart.

Solution :

Givent that $Z_r = \frac{Z_R}{R_o} = 2.6 + j\,1$ and electrical length = 28°

i) The load point is located at point A which is intersection of circle $r_a = 2.6$ and $x_a = 1$ circle.

ii) Draw a circle O at origin and radius equal to OA. This is called constant S circle.

iii) Extend line OA to point B at periphery. The wavelength value at this point is 0.23λ

iv) The electrical length of the line expressed in wavelength is given by,

$$\frac{28^\circ}{360^\circ}\lambda = 0.078\,\lambda$$

v) Move along the periphery clockwise direction with the distance 0.078λ from point B and locate a point C on the outer rim at wavelength $(0.23\lambda + 0.078\lambda) = 0.308\,\lambda$.

vi) Now joining point O and C. This line cuts constant S circle at point D. This point is the intersection of $r_a = 1.5$ circle and $x_a = -1.4$ circle.

Hence normalized input impedance is,

$$\frac{Z_s}{R_o} = 1.5 - j\,1.4$$

vii) The input impedance is given by,

$$Z_s = R_o\,(1.5 - j\,1.4)\,\Omega$$

Tamilnadu College Of Engineering

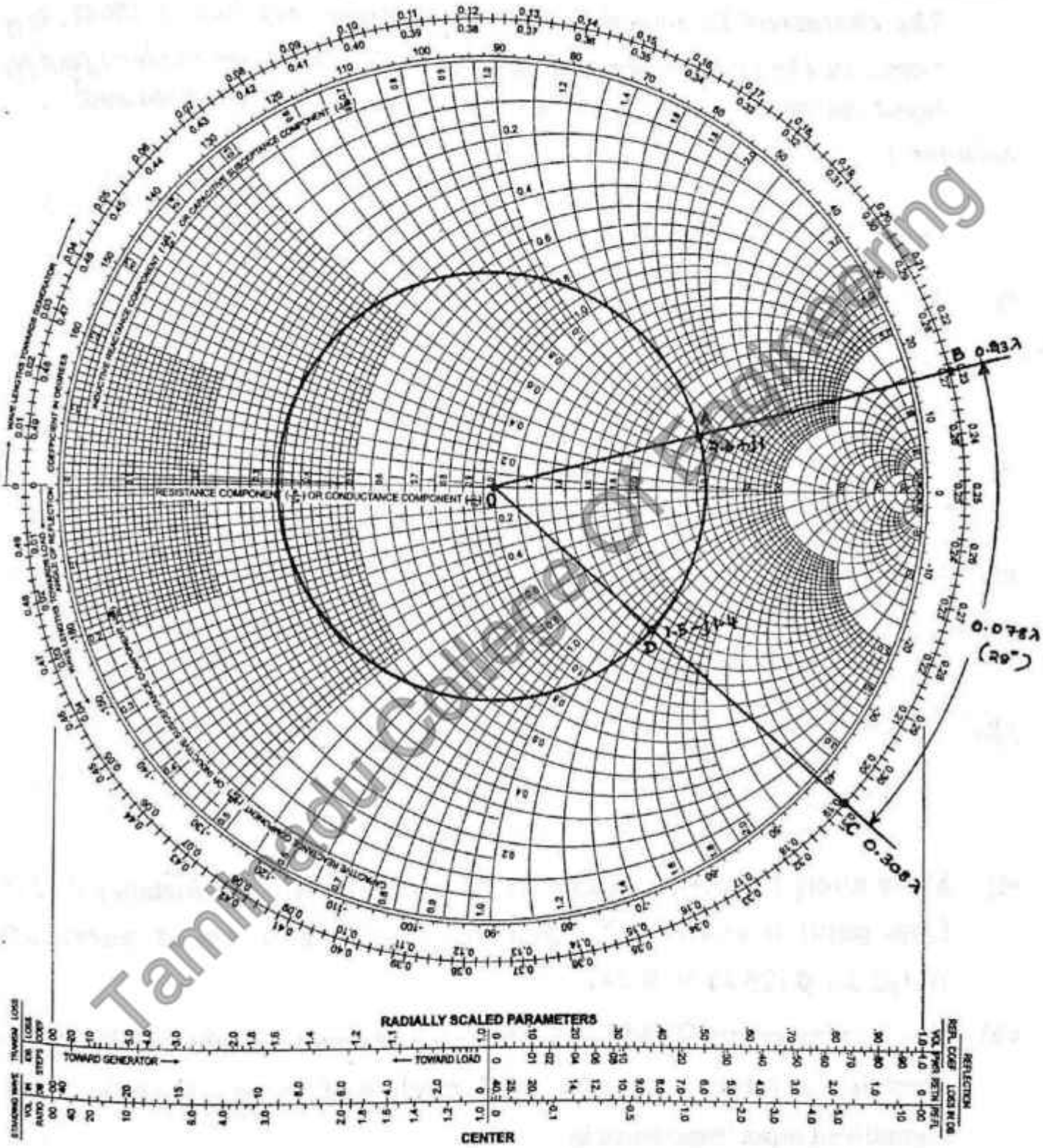

SMITH CHART

Example 6

Tamilnadu College of Engineering

Example 7

The characteristic impedance of a high frequency line is 100Ω. It is terminated in an impedance of 100 + j 100Ω. Using Smith chart find the input impedance at one eight wavelength away from the load end.

Solution :

Given that $Z_R = 100 + j\,100\Omega$, $R_o = 100\Omega$ and electrical length $= \frac{\lambda}{8}$

i) The normalized load impedance is given by

$$Z_r = \frac{Z_R}{R_o} = \frac{100 + j\,100}{100} = 1 + j\,1$$

ii) The load point is located at point A which is intersection of $r_a = 1$ circle and $x_a = 1$ circle.

iii) Draw a circle O at origin and radius equal to OA. This is called constant S circle.

iv) Extend line OA to point B at periphery. The wavelength value at this point is 0.162λ

v) The electrical length of the line expressed in wavelength is given by

$$\frac{\lambda}{8} = 0.125\,\lambda$$

vi) Move along the periphery clockwise direction with the distance 0.125λ from point B and locate a point C on the outer rim at wavelength $(0.162\,\lambda + 0.125\,\lambda) = 0.287\lambda$.

vii) Now joining points O and C. This line cuts constant S circle at point D. This point is the intersection of $r_a = 2$ circle and $x_a = -1$ circle. Hence normalized input impedance is

$$\frac{Z_s}{R_o} = 2 - j1, \text{ where } R_o = 100\Omega$$

viii) The input impedance is given by

$$Z_s = 100\,(2 - j\,1) = 200 - j\,100\ \Omega$$

Tamilnadu College Of Engineering

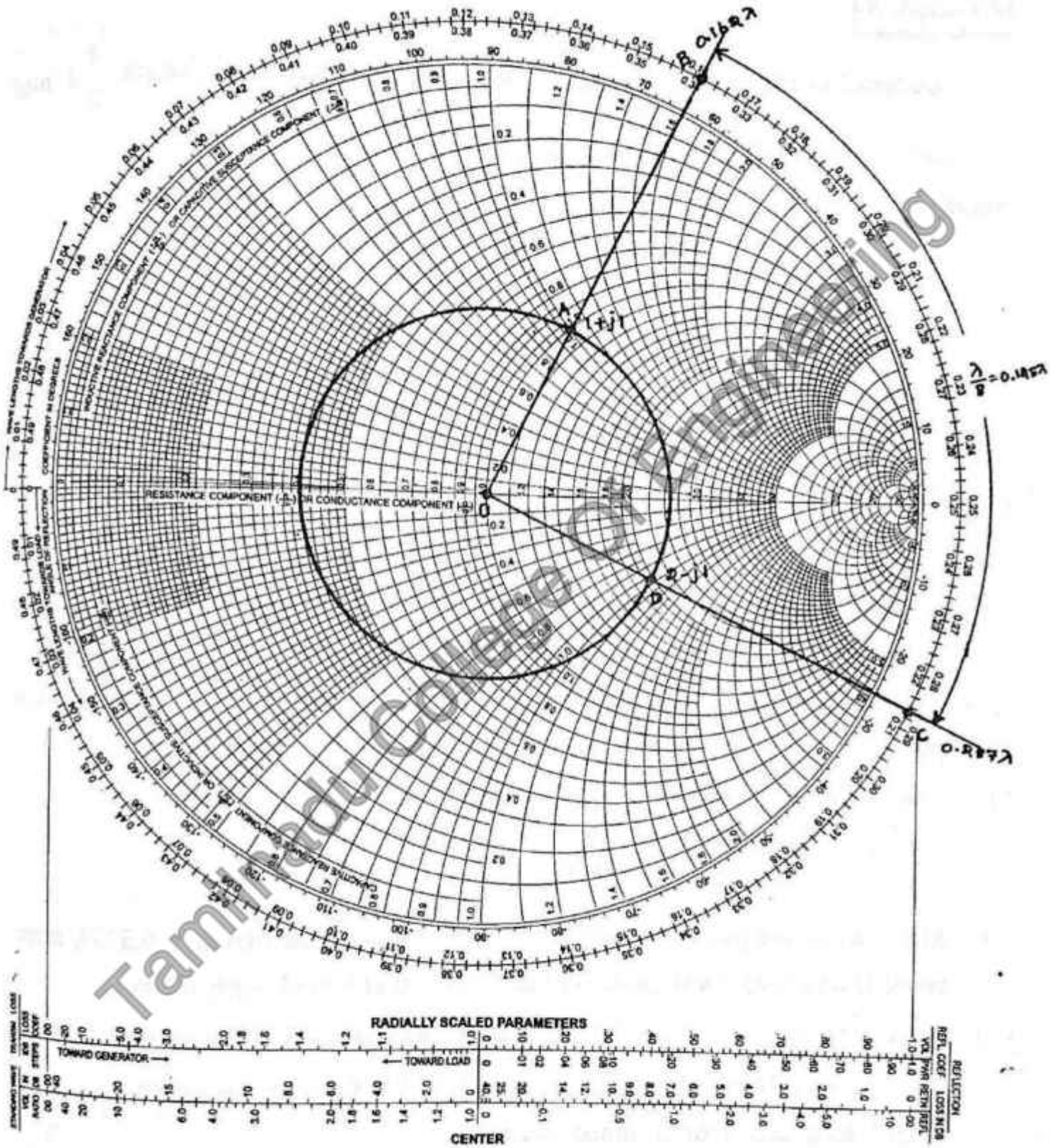

SMITH CHART

Example 7

Tamilnadu College of Engineering

Example 8

Determine the input impedance of a 200 ohm line with length $\frac{3}{8}\lambda$ and terminated in a 100 ohm load resistance. Use Smith chart.

Solution :

Given that $Z_R = 100\,\Omega, R_o = 200\,\Omega$ and electrical length $= \frac{3}{8}\lambda$

i) The normalized load impedance is given by ,

$$Z_r = \frac{Z_R}{R_o} = \frac{100}{200} = 0.5 + j0$$

ii) The load point is located at point A which is intersection of $r_a = 0.5$ circle and $x_a = 0$ circle.

iii) Draw a circle O at origin and radius equal to OA. This is called constant S circle.

vi) Extend line OA to point B at periphery. The wavelength value at this point is 0λ.

v) The electrical length of the line expressed in wavelength is given by

$$\frac{3\lambda}{8} = 0.375\,\lambda$$

vi) Move along the periphery clockwise direction with the distance 0.375λ from point B and locate a point C on the outer rim at wavelength 0.375λ.

vii) Now joining points O and C. This line cuts constant S circle at point D. This point is the intersection of $r_a = 0.8$ circle and $x_a = -0.6$ circle. Hence normalized input impedance is

$$\frac{Z_s}{R_o} = 0.8 - j\,0.6, \text{ where } R_o = 200\Omega$$

viii) The input impedance is given by

$$Z_s = 200\,(0.8 - j\,0.6) = 160 - j\,120\,\Omega$$

Tamilnadu College Of Engineering

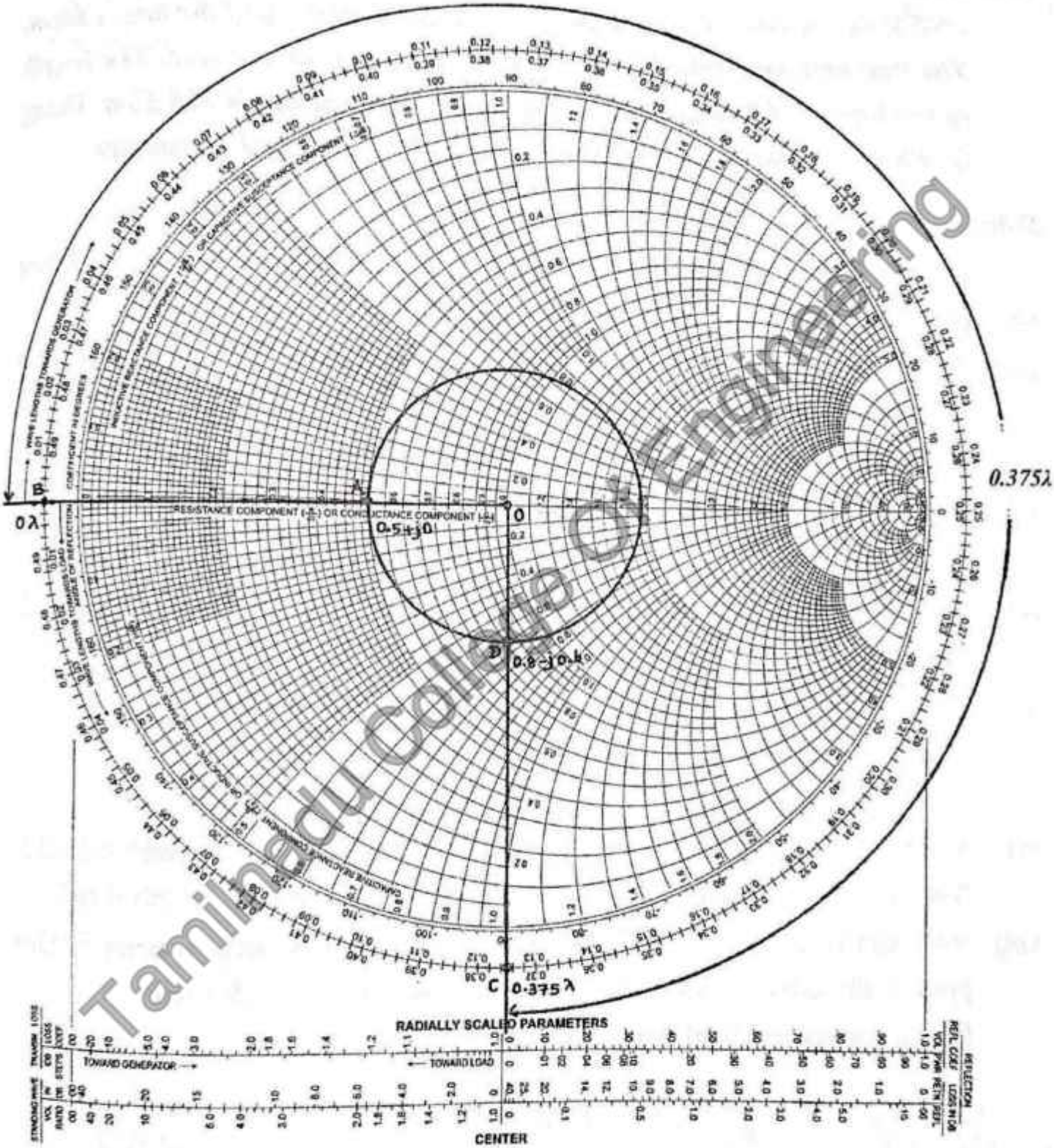

SMITH CHART

Example 8

Tamilnadu College of Engineering

Example 9

VSWR on a lossless line is found to be 5 and wavelength of the line is 80cm. The first voltage minima is observed to be 15cm from the load. The length of the line is 160cm and the characterstic impedance is 300 ohm. Using Smith chart determine load impedance and sending and impedance.

Solution :

Given that S = VSWR = 5, R_o = 300 ohm, Distance between load and first voltage minima = 15cm and electrical length = 160cm.

(i) First locate point A at $S = r_a = 5$ on the horizontal axis. This is also the first voltage maxima point.

ii) Draw a circle, O at origin and radius equal to OA. This is called constant S circle.

iii) The constant S circle cuts the left hand side of the horizontal axis at B $(r_a = 0.2)$. This is also called first voltage minimum point.

iv) The first voltage minimum from the load lies along the horizontal axis at C. The wavelength value at this point is 0λ.

v) The distance between the voltage minimum nearest to load is

$$\frac{15}{80}\lambda = 0.1875\,\lambda$$

vi) Move along the periphery anti clockwise direction with the distance $0.1875\,\lambda$ from point C and locate the point D on the outer rim at wavelength $0.1875\,\lambda$.

viii) Now joining points O and D. This line cuts constant S circle at point E. This point is the intersection of $r_a = 1.1$ circle and $x_a = -1.9$ circle.

Hence normalized load impedance is,

$$\frac{Z_R}{R_o} = 1.1 - j\,1.9$$

Load impedance $Z_R = 300\,(1.1 - j\,1.9) = 330 - j\,570\,\Omega$

viii) The electrical length of the line expressed in wavelength is given by

$$\frac{160 \times 10^{-12}}{80 \times 10^{-2}}\lambda = 2\lambda$$

Tamilnadu College Of Engineering

So if we travel a distance of 2λ from a point E, the sending end or input impedance can be obtained. But it is clear that the distance 2λ travelled from point E would reach the same point after four revolutions each of 0.5λ.

Therefore $Z_s = Z_R = 330 - j\,570\,\Omega$.

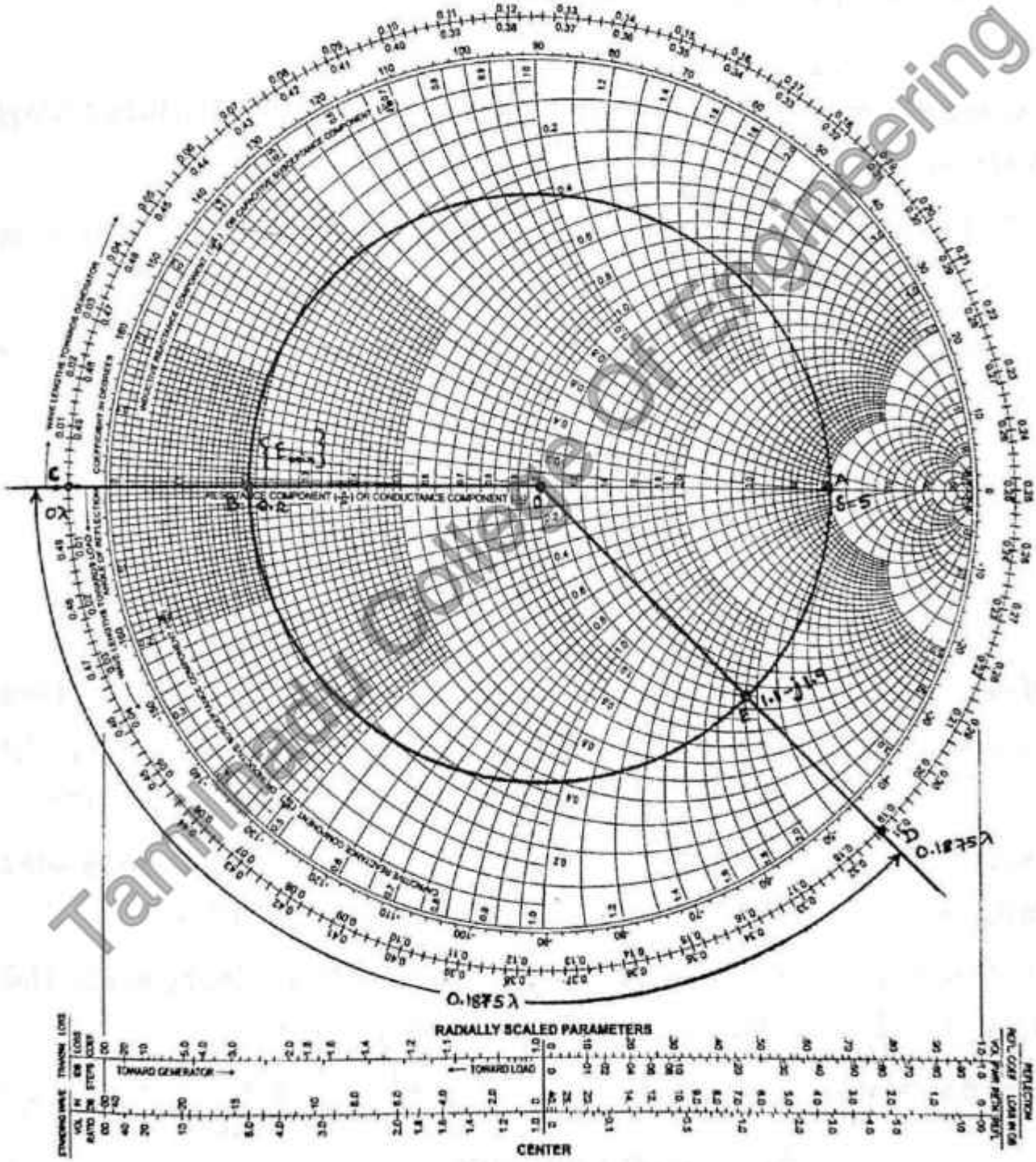

SMITH CHART

Example 9

Tamil Nadu College of Engineering

Example 10

A lossless line of characterstic impedance 100 ohm is terminated is unknown load impedance producing standing wave ratio of value 3. The operating frequency is 300MHz. Determine unknown load impedance if first voltage maxima occurs at 320cm from load.

Solution :

Given that S = 3, $R_o = 100\Omega, f = 300 \times 10^6$ Hz and distance between load and first voltage maximum = 320*cm*.

i) First locate point A at $S = r_a = 3$ on the horizontal axis. This is also the first voltage maximum point.

ii) Draw a circle, O at origin and radius equal to OA. This is called constant *S* circle.

iii) The first voltage maximum from the load lies along the horizontal axis at B. The wavelength value at this point is 0.25λ.

iv) The distance between the voltage maximum nearest to load is,

$$320 \times 10^{-2}\lambda = 3.2\lambda$$

So if we travel a distance of 3.2λ from a point B, the unknown load impedance can be obtained. But it is clear that $(3.2\lambda = 3\lambda + 0.2\lambda)$ the distance 3λ travelled from point B would reach the same point after six revolutions each of 0.5λ.

v) Now move along the periphery from point B in anticlockwise direction with a distance 0.2λ to reach point C located at $(0.25\lambda + 0.2\lambda)$ 0.45λ.

v) Now joining points O and C. This line cuts constant S circle at point D. This point is the intersection of $r_a = 0.36$ circle and $x_a = 0.32$ circle.

Hence normalized load impedance is,

$$\frac{Z_R}{R_o} = 0.36 + j\,0.32 \text{ where } R_o = 100\,\Omega$$

Load impedance $Z_R = 100\,(0.36 + j\,32) = 36 + j\,32\,\Omega$

Tamilnadu College Of Engineering

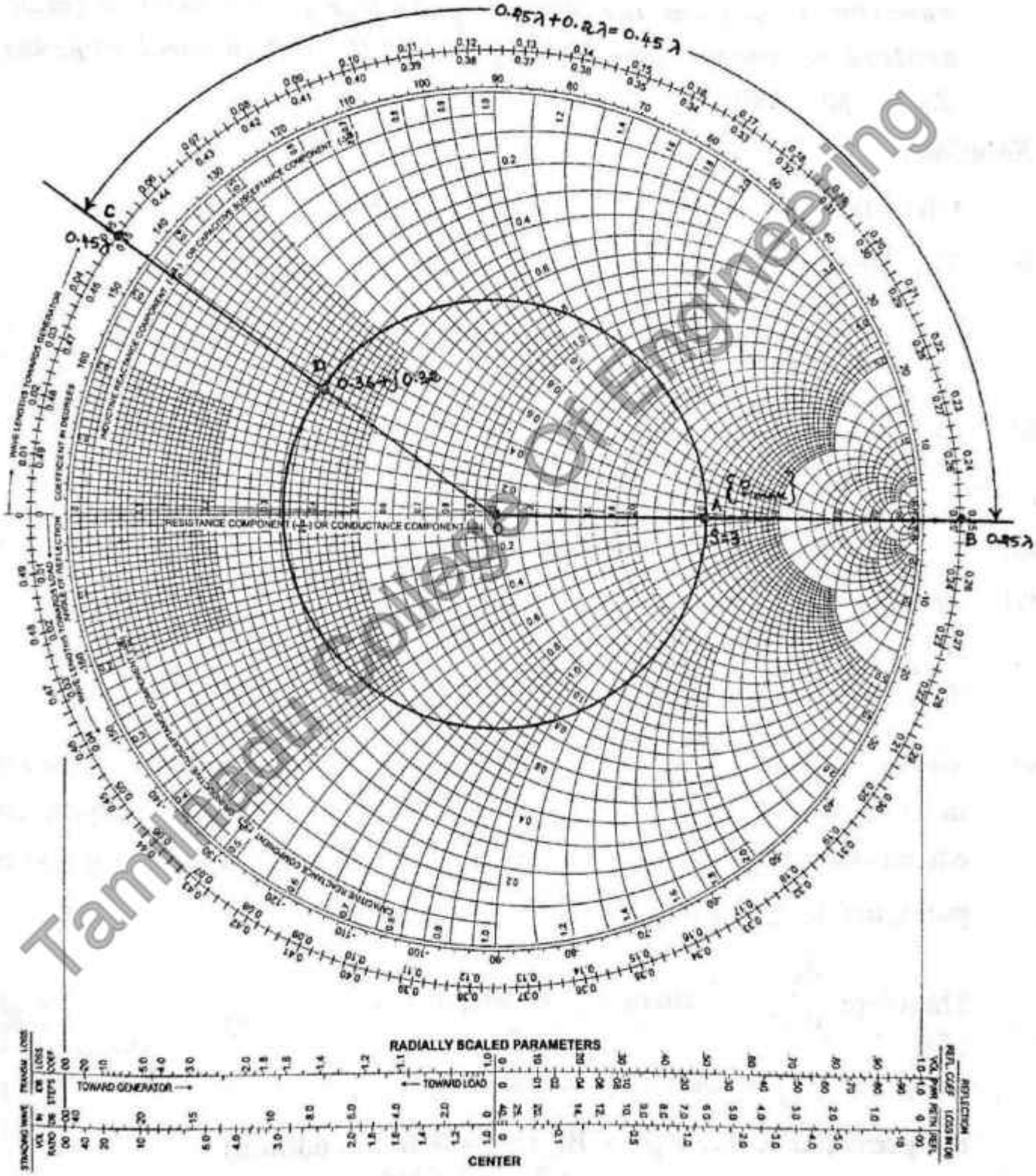

SMITH CHART

Example 10

Tamilnadu College of Engineering

Example 11

Determine the standing wave ratio, characterstic impedance of a quarter wave transformer and the distance of the transformer must be placed to achieve a smooth line with $R_o = 50\ \Omega$ with a load impedance $Z_R = 30 + j\,40\ \Omega$.

Solution :

Given that $Z_R = 30 + j\,40\,\Omega$ and $R_o = 50\,\Omega$

i) The normalized load impedance is given by

$$Z_r = \frac{Z_R}{R_o} = \frac{30 + j\,40}{50} = 0.6 + j\,0.8$$

ii) The load point is located at point A which is intersection of $r_a = 0.6$ circle and $x_a = 0.8$ circle.

iii) Draw a circle, O at origin and radius equal to OA. This is called constant S circle.

iv) The constant S circle cuts the right hand side of the horizontal axis at B where reading is 3.

Thus $S = \text{VSWR} = 3$

v) There are two points B and B^1 on the constant S circle where the input impedance can be resistive. The distance from the load to input impedance is calculated in wavelength to the shortest of the two resistive input impedance point, that is $r_a = 3$ at point B.

Therefore $\frac{Z_R}{R_o} = 3$ where $R_o = 50\Omega$

$$Z_s = 50 \times 3 = 150\,\Omega$$

For perfect matching $Z_R = R_o$ (Smooth line condition)

vi) The characterstic impedance of a quarter wave transformer is given by

$$Z_o = \sqrt{Z_s\,Z_R} = \sqrt{150 \times 50} = 86.60\,\Omega$$

vii) Extend line OB to point C at periphery and extend the line OA to point D at periphery. Now the distance between the points C and D is 0.126λ

viii) The distance of quarter wave transformer from load is given by 0.126λ

Tamilnadu College Of Engineering

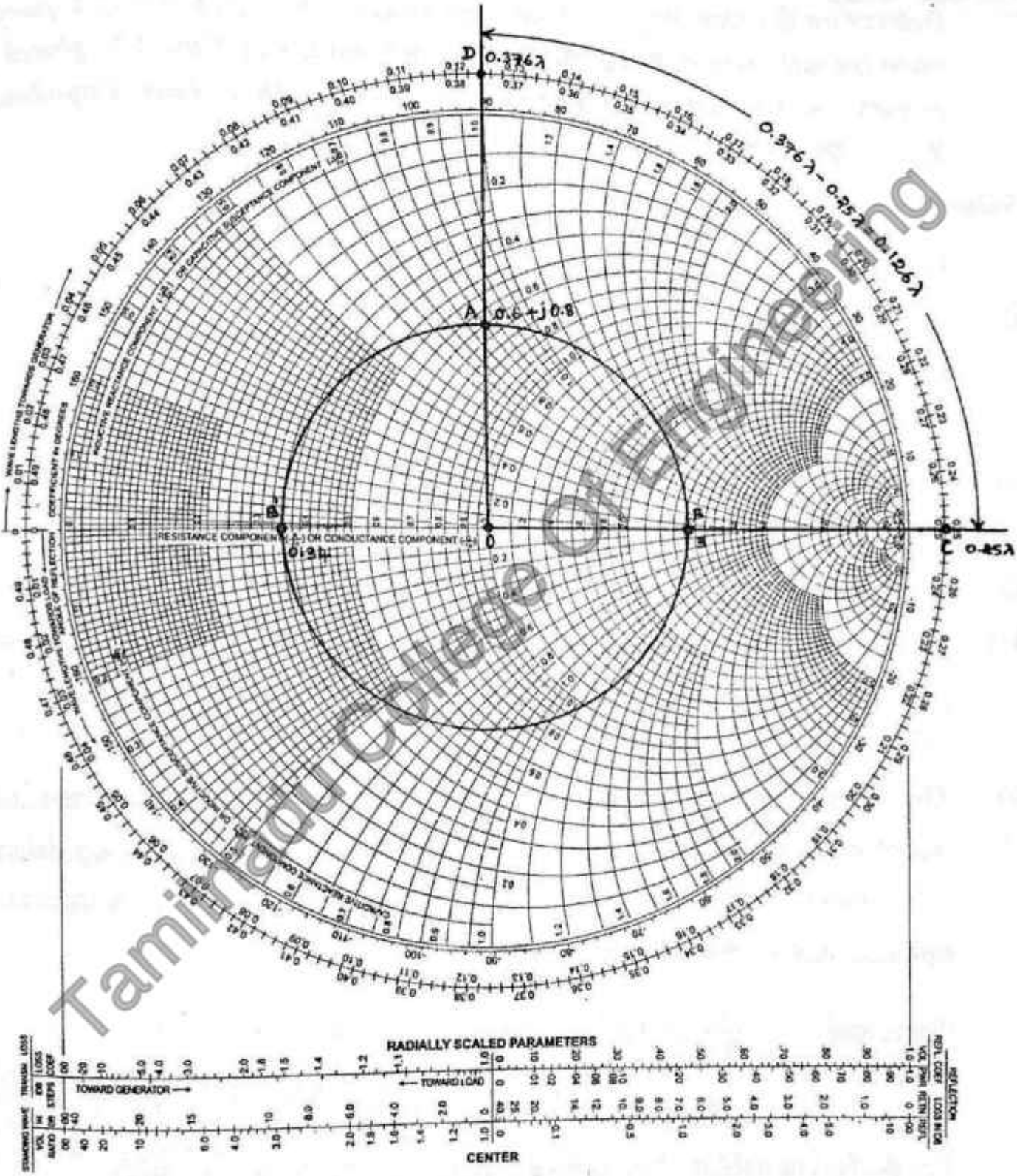

SMITH CHART

Tamilnadu College of Engineering

Example 11

Example 12

Determine the standing wave ratio, characteristic impedance of a quarter wave transformer and the distance of the transformer must be placed to achieve a smooth line with $R_o = 50\ \Omega$ with a load impedance $Z_R = 80 - j\,30\Omega$.

Solution:

Given that $Z_R = 80 - j\,30\ \Omega$ and $R_o = 50\Omega$

i) The normalized load impedance is given by,

$$Z_r = \frac{Z_R}{R_o} = \frac{80 - j\,30}{50} = 1.6 - j\,0.6$$

ii) The load point is located at point A which is intersection of $r_a = 1.6$ circle and $x_a = -0.6$ circle.

iii) Draw a circle, O at origin and radius OA. This is called constant S circle.

iv) The constant S circle cuts the right hand side of the horizontal axis at B where reading is 1.9.

Thus S = VSWR = 1.9

v) There are two points B and B^1 on the constant S circle where the input impedance can be resistive. The distance from the load to input impedance is calculated in wavelength to the shortest of the two resistive input impedance point, that is $r_a = 0.52$ at point B^1.

Therefore $\frac{Z_s}{R_o} = 0.52$ where $R_o = 50\ \Omega$

$$Z_s = 50 \times 0.52 = 26\ \Omega$$

For perfect matching (Smooth line condition) $Z_R = R_o = 50\ \Omega$

vi) The characterstic impedance of a quarter wave transformer is given by

$$Z_o = \sqrt{Z_o\, Z_R} = \sqrt{26 \times 50} = 36.05\ \Omega$$

vii) Extend line OB′ to point C at periphery and extend the line OA to point D at periphery. Now the distance between the points C and D is 0.204λ.

viii) The distance of quaterwave transformer from load is given by 0.204λ

Tamilnadu College Of Engineering

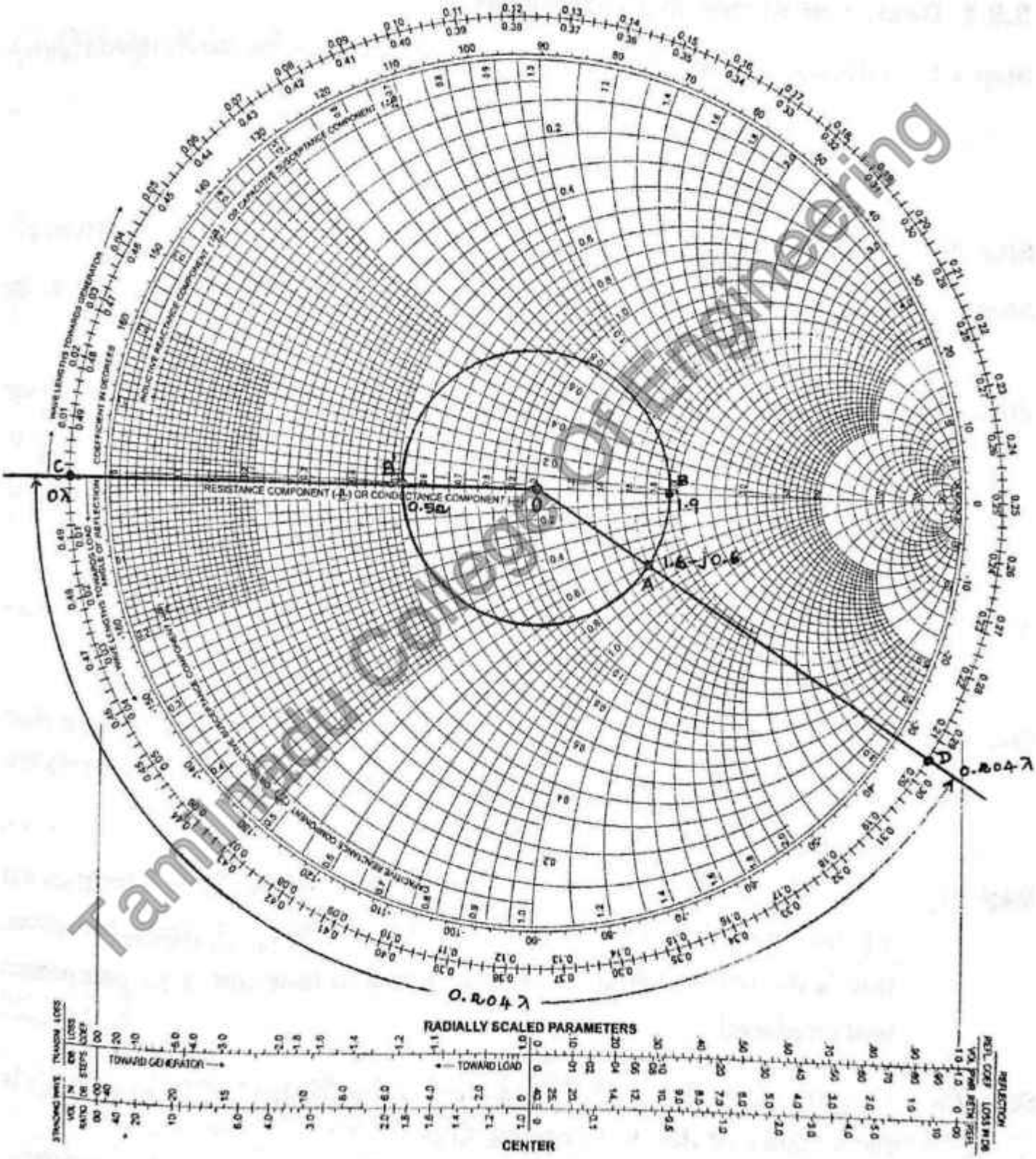

SMITH CHART

Example 12

Tamilnadu College of Engineering

3.9 SINGLE AND DOUBLE STUB MATCHING USING SMITH CHART

3.9.1 Design of Single Stub Matching

Step 1 : Given Z_R and R_0 of transmission line, normalize the load impedance by

$$Z_r = \frac{Z_R}{R_0}$$

Step 2 : Mark the point on the smith chart where r_a and x_a circles are intersect.

Step 3 : Draw a circle with the radius equal to the distance from the centre of the chart to the point.

Step 4 : Draw a straight line from this point through the centre of the chart to the other half of the chart, that is travel around it through a distance of $\frac{\lambda}{4}$ to find the load admittance. As the stub is placed in parallel with the main line, it is easy to deal with admittances to make stub calculations.

Step 5: Mark the point where the straight line intersects the circle drawn. This point gives the normalized admittance (g + jb).

Step 6 : Note the point where the circle cuts the centre straight line of the chart to the right side of the centre. Read the value of the point. It gives VSWR (S) straight away.

Step 7 : Note the point nearest to the load at which the normalized admittance is $1 \pm jb$. This is the point where $\pm jb$ intersects the $r_a = 1$ circle. Moreover, this is the point at which a stub designed to tune out $\pm jb$ component will be placed.

Step 8 : Note the distance traveled round the circumference of the chart. This is the distance of the stub from the load.

Step 9 : Move clockwise round the perimeter of the chart and find the point at which the susceptance tunes out $\pm jb$ susceptance of the line. For example, if the line admittance is $1+jb$, the required susceptance is $-jb$.

Tamilnadu College Of Engineering

Step 10 : Note the distance in wavelength from $\infty, j\infty$ of the chart to the new point. This gives the length of the stub required.

3.9.2 Design of Double Stub Matching

Step 1 : Fix the distance between the two stubs and keep stub 1 at the location of the load.

Step 2 : Draw the circle corresponding to the normalized conductance g = 1.

Step 3 : Obtain the normalized distance of $\frac{d}{\lambda}$.

Step 4 : Rotate the circle in anticlockwise direction by wavelengths towards the load and draw. The point which represents y_1 is located here.

Step 5 : Locate $y_L = g_L + j\,b_L$.

Step 6 : Draw $g = g_L$ circle. This intersects the rotated g = 1 circle at one or two points where $y_L = g_L + j\,b_1$.

Step 7 : Locate the corresponding y_2 points on the g = 1 circle, $y_2 = 1 + jb_2$.

Step 8 : Find the stub length L_1 between the points representing y_1 and y_L.

Step 9 : Find the stub length L_2 from the angle between the point representing $-jb_2$ and short circuited point.

The stub distance from the load need not be found as d is fixed.

Example 13

A 300 Ω transmission line is connected to a load impedance of (450 − j 600 Ω) at 10MHz. Find the position and length of a short circuited stub required to match the line using Smith chart.

Solution :

Given that $Z_R = 450 - j\,600\,\Omega$, $R_o = 300\Omega$ and $f = 10 \times 10^6$ Hz

Tamilnadu College Of Engineering

i) The normalized load impedance $Z_r = \frac{Z_R}{R_o} = \frac{450 - j\,600}{300} = 1.5 - j\,2$. Locate point A as an intersection of $r_a = 1.5$ circle and $x_a = -2$ circle. As the reactive part of impedance is negative, it is located below the horizontal axis.

ii) Draw a circle, O at origin and radius equal to OA. This is called constant S circle. Its normalized load admittance is obtained at point B placed diametrically opposite to A .Join points O and B, extend line upto B^1 on periphery.

iii) The intersection of constant S circle and unit circle is shown as point C is nearest to load point B as we travel towards generator in clockwise direction.

iv) Join points O and C and extend line upto point C^1 on the periphery. Now from B^1 to C^1 is given as location of stub from load in wavelength. That is

$$S_1 = 0.182\lambda - 0.052\lambda = 0.13\lambda$$

Wavelength $\lambda = \frac{c}{f} = \frac{3 \times 10^8}{10 \times 10^6} = 30m$

Therefore $S_1 = 0.13 \times 30 = 3.9m$

v) The susceptance at point C is nothing but the susceptance of line at the stub connection and it is equal to + j 1.7. It is capacitive susceptance. To neutrolize it, we must use inductive susceptance of - j 1.7. It is indicated by point D. Extend the line from D upto point D^1 on the periphery.

vi) The point E is the short circuit point on the admittance chart. Now moving from point E towards generator upto point D^1 in the clockwise direction, the number of wavelength measured gives the required length of the stub.

$$L = 0.334\lambda - 0.25\lambda = 0.084\lambda(30) = 2.52\,m$$

Tamilnadu College Of Engineering

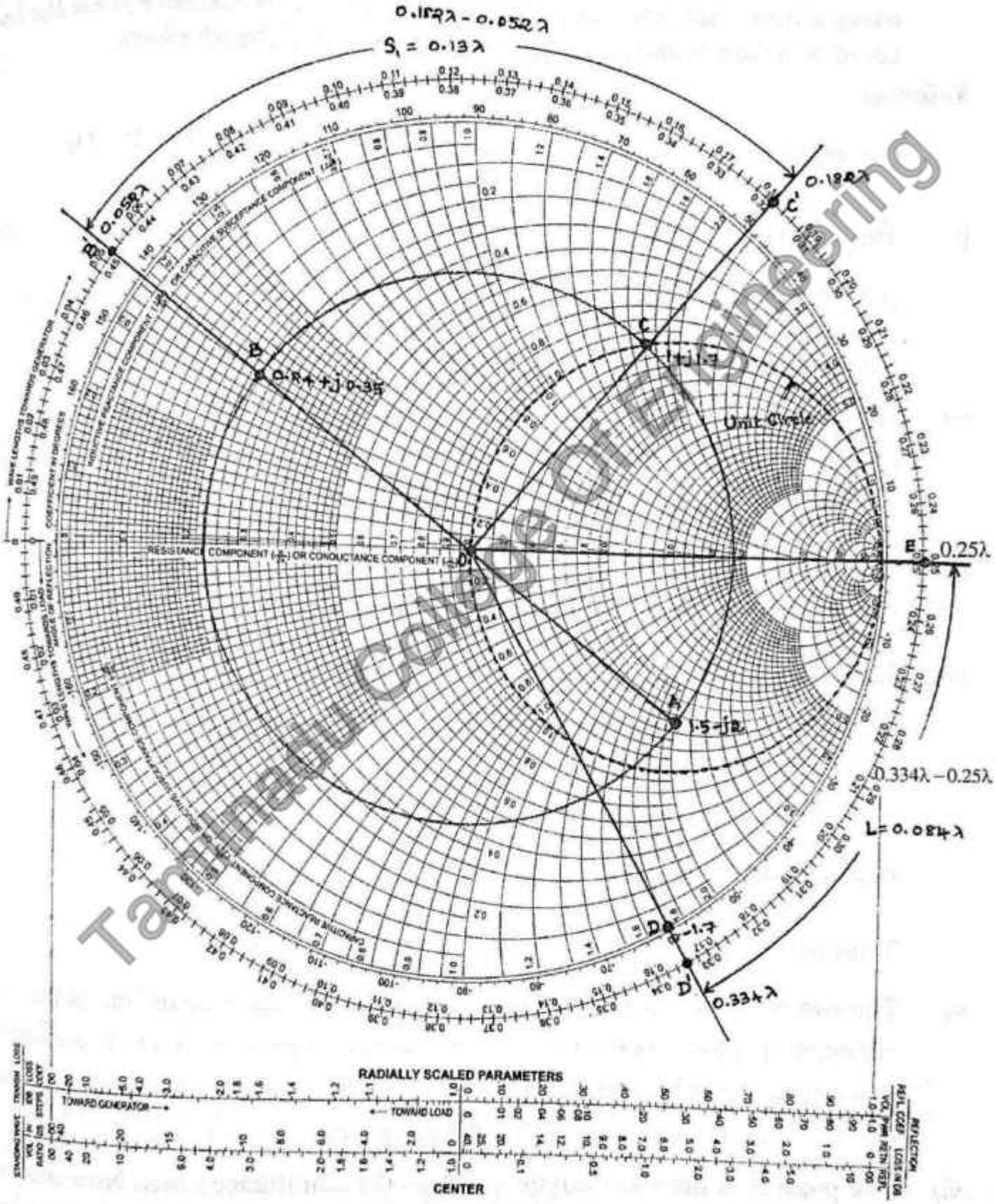

SMITH CHART

Example 13

Tamilnadu College of Engineering

Example 14

A 75 Ω lossless transmission line is to be matched with a 100 - j 80 Ω load using single stub. Calculate the stub length and its distance from the load corresponding to the frequency of 30 MHz using Smith chart.

Solution :

Given that $Z_R = 100 - j\,80\,\Omega$, $R_o = 75\,\Omega$ and $f = 30 \times 10^6$ Hz

i) The normalized load impedance $Z_r = \dfrac{Z_R}{R_o} = \dfrac{100 - j\,80}{75} = 1.33 - j\,1.07$.

Locate point A as an intersection of $r_a = 1.33$ circle and $x_a = -1.07$ circle. As the reactive part of impedance is negative, it is located below the horizontal axis.

ii) Draw a circle, O at origin and radius equal to OA. This is called constant S circle. Its normalized load admittance is obtained at point B placed diametrically opposite to A. Join points O and B, extend line upto B^1 on periphery.

iii) The intersection of constant S circle and unit circle is shown as point C is nearest to load point B as we travel towards generator in clockwise direction.

iv) Join point O and C and extend line upto point C^1 on the periphery. Now from is B^1 to C^1 given as location of stub from load in wavelength. That is

$$S_1 = 0.161\,\lambda - 0.07\lambda = 0.091\,\lambda$$

Wavelength $\lambda = \dfrac{c}{f} = \dfrac{3 \times 10^8}{30 \times 10^6} = 10m$

Therefore $S_1 = 0.091\,\lambda = 0.091 \times 10 = 0.91m$

v) The susceptance at point C is nothing but the susceptance of line at the stub connection and it is equal to + j 1. It is a capacitive susceptance. To neutralize it, we must use inductive susceptance of - j 1. It is indicated by point D. Extend the line from D upto point D^1 on the periphery.

vi) The point E is the short circuit point on the admittance chart. Now moving from point E towards generator upto point D^1 in the clockwise direction, the number of wavelengths measured gives the required length of the stub.

$$L = 0.375\lambda - 0.25\lambda = 0.125\lambda = 0.125\,(10) = 1.25m$$

Tamilnadu College Of Engineering

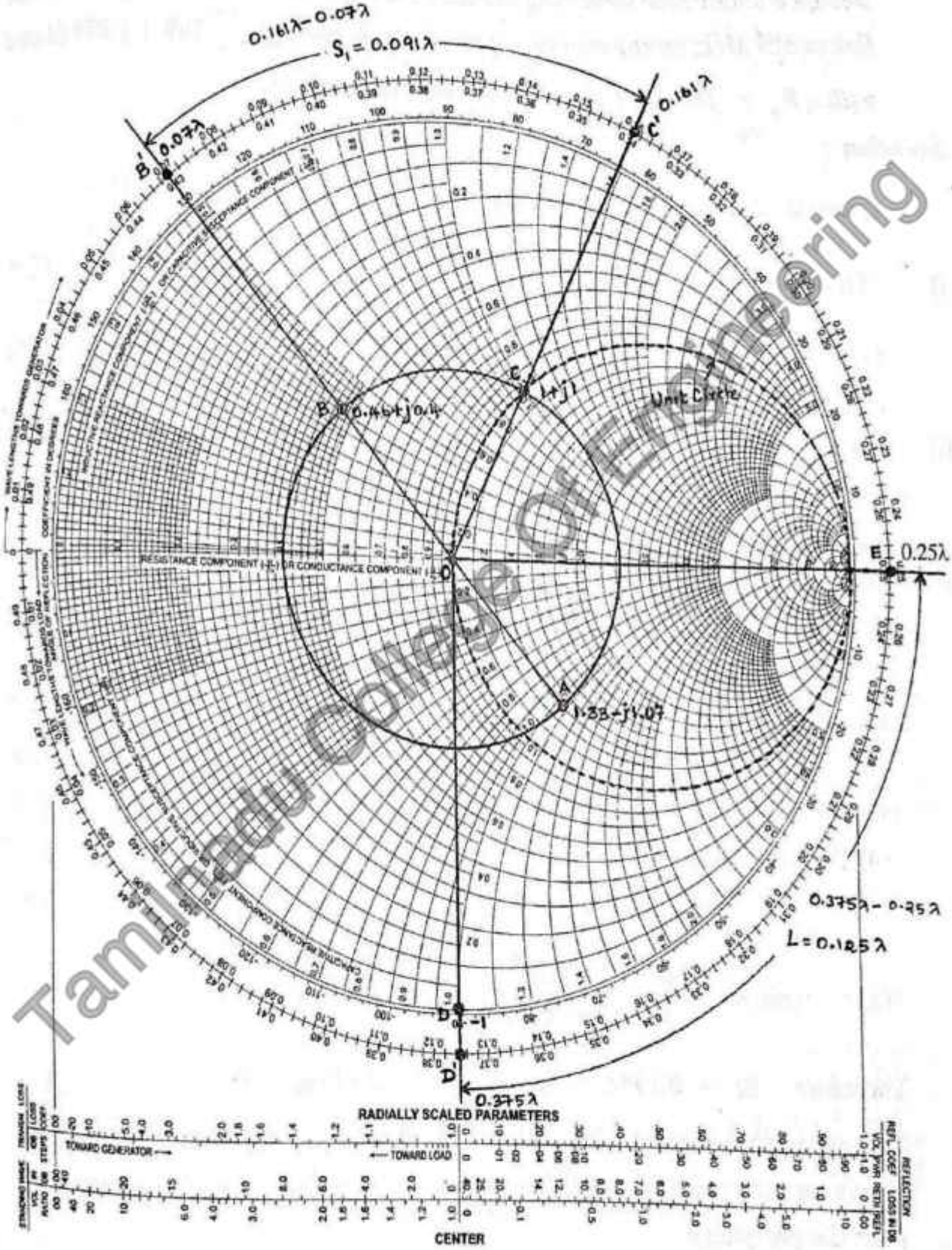

Tamil Nadu College of Engineering

SMITH CHART

Example 14

Example 15

Design a single stub matching network using Smith chart for a transmission line at 500 MHz terminated with a load impedance $Z_R = 300 + j\,250\ \Omega$ and with a $R_o = 100\ \Omega$. Use short circuited shunt stubs.

Solution :

Given that $Z_R = 300 + j\,250\,\Omega$, $R_o = 100\,\Omega$ and $f = 500 \times 10^6$ Hz

i) The normalized load impedance $Z_r = \dfrac{Z_R}{R_o} = \dfrac{300 + j\,250}{100} = 3 + j\,2.5$

Locate point A as an intersection of circle $r_a = 3$ and $x_a = 2.5$ circle. As the reactive part of impedance is positive, it is located above the horizontal axis.

ii) Draw a circle, O at origin and radius equal to OA. This is called constant S circle. Its normalized load admittance is obtained at point B placed diametrically opposite to A. Join points O and B, extend line upto B^1 on periphery.

iii) The intersection of constant *S* circle and unit circle is shown as point C is nearest to load point B. The susceptance at point C is nothing but the susceptance of line at the stub connection and it is equal to $-j\,1.8$. It is a inductive susceptance. To neutralize it, we must use capacitive susceptance of $+j\,1.8$. It is indicated by point D. Extend the line from D upto point D^1 on the periphery. Now from B^1 to D^1 is given as location of stub from load in wavelength. That is,

$$S_1 = 0.5\lambda - 0.475\lambda + 0.17\,\lambda = 0.195\,\lambda$$

Wave length $\lambda = \dfrac{c}{f} = \dfrac{3 \times 10^8}{500 \times 10^6} = 0.6m$

Therefore $S_1 = 0.195\lambda = 0.195 \times 0.6 = 0.117\,m$

v) The susceptance at point E is equal to $+j\,1.58$, we must use $-j\,1.58$ to neutralize it. It is represented as point *f*. Join points O and F and extend line upto point F^1 on the periphery.

vi) The point G is the short circuit point on the admittance chart. Now moving from point G towards generator upto point F^1 in the clockwise direction, the number of wavelength measurement gives the required length of the stub.

$$L = 0.332\,\lambda - 0.25\lambda = 0.082 \times 0.6 = 0.0492\ m$$

Tamilnadu College Of Engineering

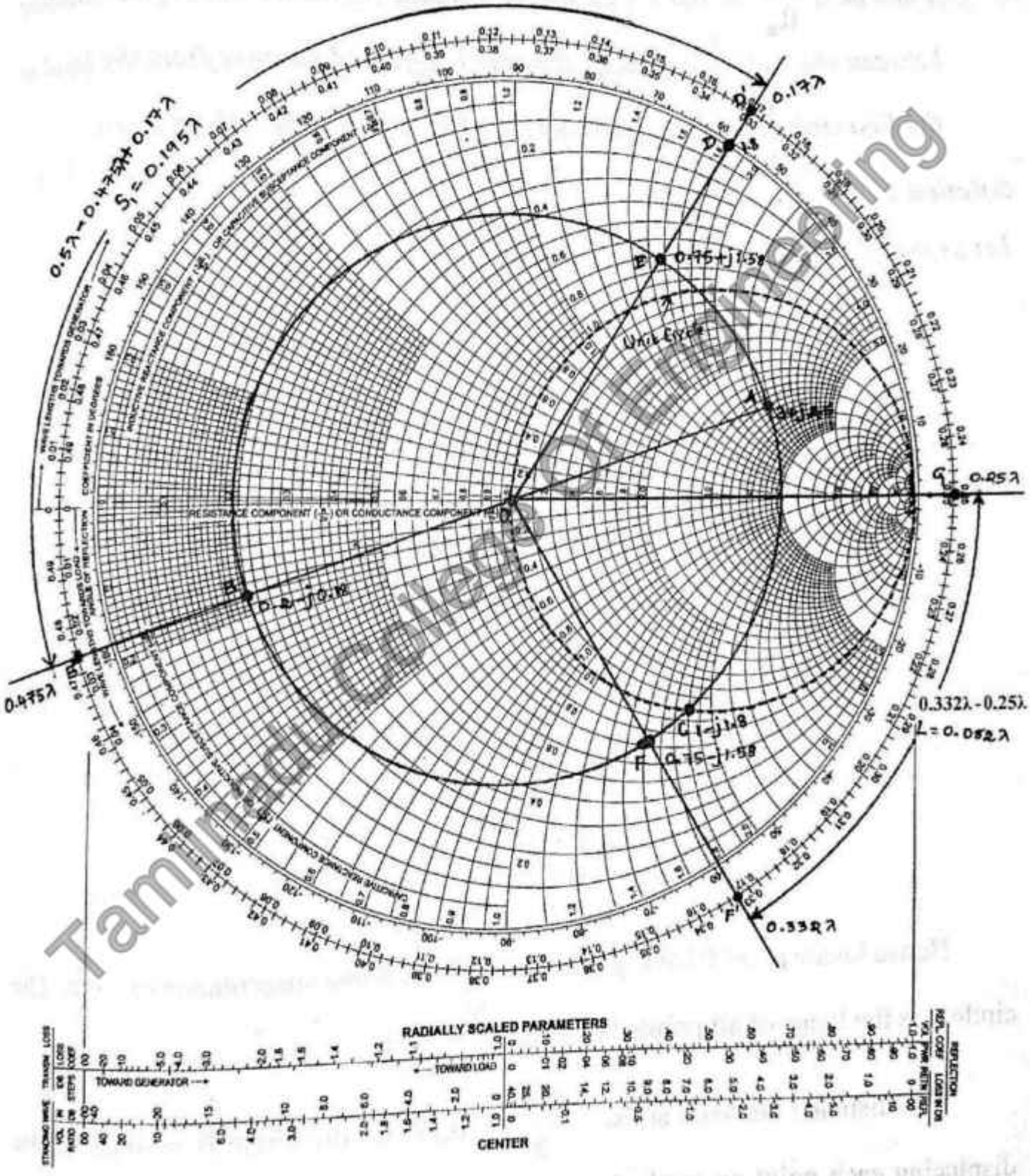

SMITH CHART

Example 15

Tamilnadu Colleges Affiliated Screening

Example 16

For a load $\frac{Z_R}{R_o} = 0.8 + j\,1.2$ design a double stub tuner making the distance between the stub $\frac{3\lambda}{8}$. Specify the stub length and distance from the load to the first stub. The stubs are short circuited. Verify using Smith chart.

Solution :

Let us first find normalized load admittance

$$\frac{Z_R}{R_o} = 0.8 + j\,1.2$$

$$Z_R\,G_o = 0.8 + j\,1.2 \quad \text{Where } \frac{1}{R_o} = G_o$$

Therefore $$\frac{1}{Z_R\,G_o} = \frac{1}{0.8 + j\,1.2}$$

$$\frac{Y_R}{G_o} = \frac{1}{0.8 + j\,1.2} \times \frac{0.8 - j\,1.2}{0.8 - j\,1.2} \quad \text{where } \frac{1}{Z_R} = Y_R$$

$$\frac{Y_R}{G_o} = 0.4 - j\,0.6$$

Hence locate point P having conductance of 0.4 and susceptance of – 0.6. The circle A is the locus of all points for which $\frac{Y_2}{G_o} = 1$.

The distance between stubs = $\frac{3\lambda}{8} = 0.375\,\lambda$, the circle B is obtained by displacing each point on circle A counterclockwise by 0.375λ or the diameter of circle B projects downwards from centre of the chart.

Tamilnadu College Of Engineering

Stub 1 should change $\frac{Y_R}{G_o}$ to $\frac{Y_1}{G_o}$ which will lie on circle B. stub 1 is shorted. Hence it can add any conductance. Hence travelling along constant conductance circle from point P towards generator to meet circle B at point 1.

At 1 : $\frac{Y_1}{G_o} = 0.4 - j\,0.2$. Hence stub 1 should add + j0.4. The constant susceptance circle of 0.4 cuts outer rim of chart at 0.06λ.

The length of shorted first stub is given by,

$$L_1 = (0.5 - 0.25)\,\lambda + 0.06\,\lambda = 0.31\,\lambda$$

As the distance between two stubs is $\frac{3\lambda}{8} = 0.375\,\lambda$. Hence starting from point 1 and going a distance equal to 0.375λ, we get point 2 on circle A.

At 2 : $\frac{Y_2}{G_o} = 1 - j\,1$. The stub 2 should provide $+j1$ susceptance. The constant susceptance circle cuts the outer rim of chart at $0.125\ \lambda$

The length of shorted second stub is given by,

$$L_2 = (0.5 - 0.25)\,\lambda + 0.125\,\lambda = 0.375\,\lambda$$

Tamilnadu College Of Engineering

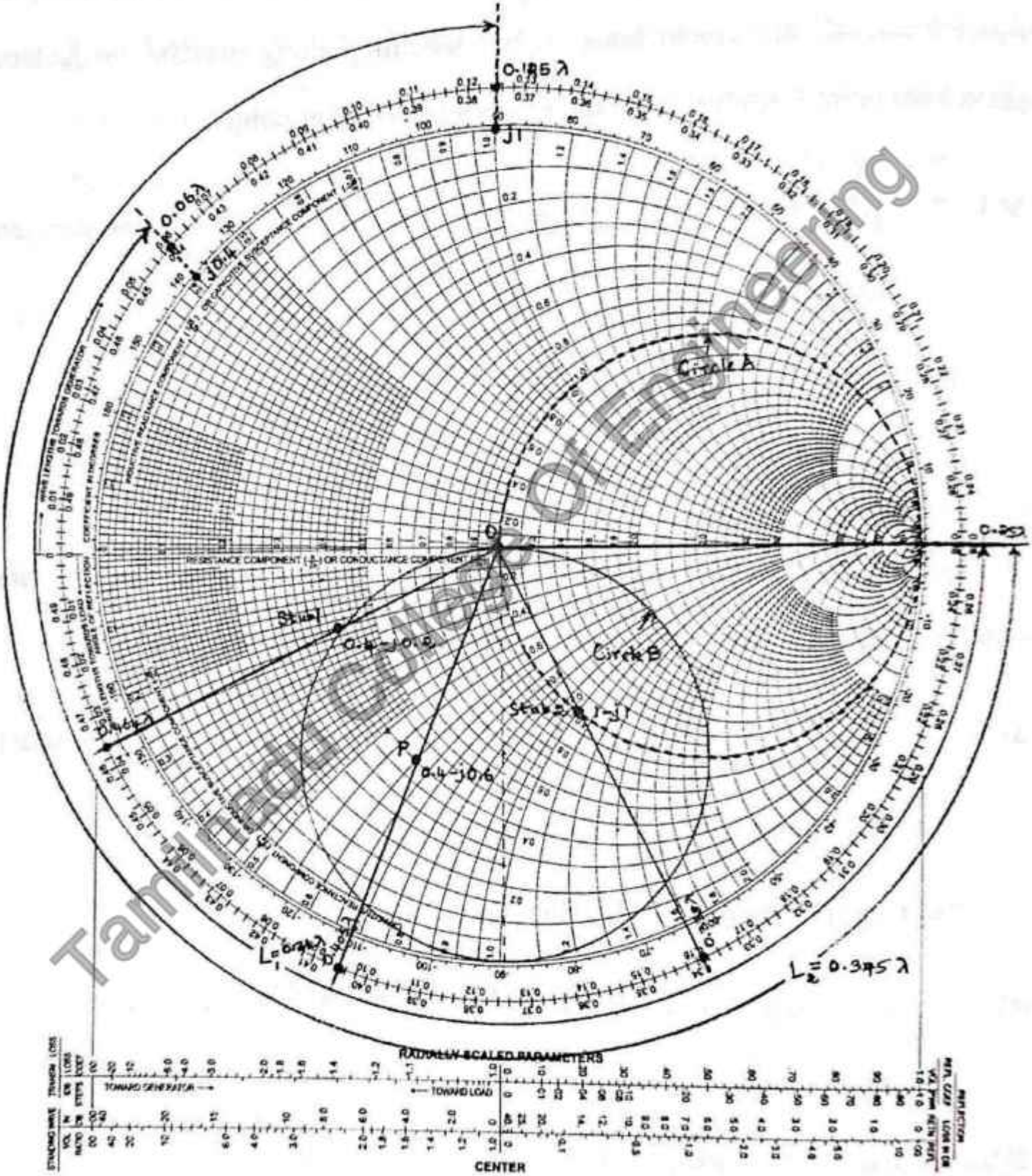

SMITH CHART

Example 16

Tamilnadu College of Engineering

Example 17

A 75 Ω line feeds an inductive load $Z_R = 18.75 + j\,56.25\,\Omega$. Design a double stub tuner to match this load to the line using Smith chart.

Solution:

i) Normalized load impedance $Z_r = \frac{Z_R}{R_o} = \frac{18.75 + j\,56.25}{75}$. Locate point A as an intersection of $r_a = 0.25$ circle and $x_a = 0.75$ circle.

ii) Draw a circle, O at origin and radius equal to OA. This is called constant *S* circle. Its normalized load admittance is obtained at point B placed diametrically opposite to A. That is $Y = 0.4 - j\,1.2$

iii) Circle A is the circle for $r_a = 1$. Circle B is the locus of all the points on the circle A displaced by $\frac{\lambda}{4}$. The stub 1 adds a susceptance in parallel, this is done to change the value of admittance to such a value that it plots on the circle B. Since stub 1 cannot alter the conductance, to a point on the circle B, pointC. That is $Y = 0.4 + j\,0.5$

It is observed that the susceptance is changed by $+\,j\,0.7$.

iv) Transforming the point C to the point D on the circle A, Since the line between 1,1 and 2,2 is a $\frac{\lambda}{4}$ line that transforms the admittance at 1,1 to 2,2 such that the conductance equals the characterstic conductance.

$$Y = 1 + j\,1.2$$

v) The stub length at 2,2 should cancel the imaginary part of the above admittance. The susceptance of the stub at 2,2 must be $-j\,1.2$.

vi) $Y = -1.2$ is found at point E and $Y = +0.7$ is found at point F.

vii) Length of the stub 1 is distance between P and F, that is

$$L_1 = 0.25\lambda + 0.098\lambda = 0.348\,\lambda$$

Length of the stub 2 is distance between P and E that is

$$L_2 = 0.36\,\lambda - 0.25\lambda = 0.11\,\lambda$$

Tamilnadu College Of Engineering

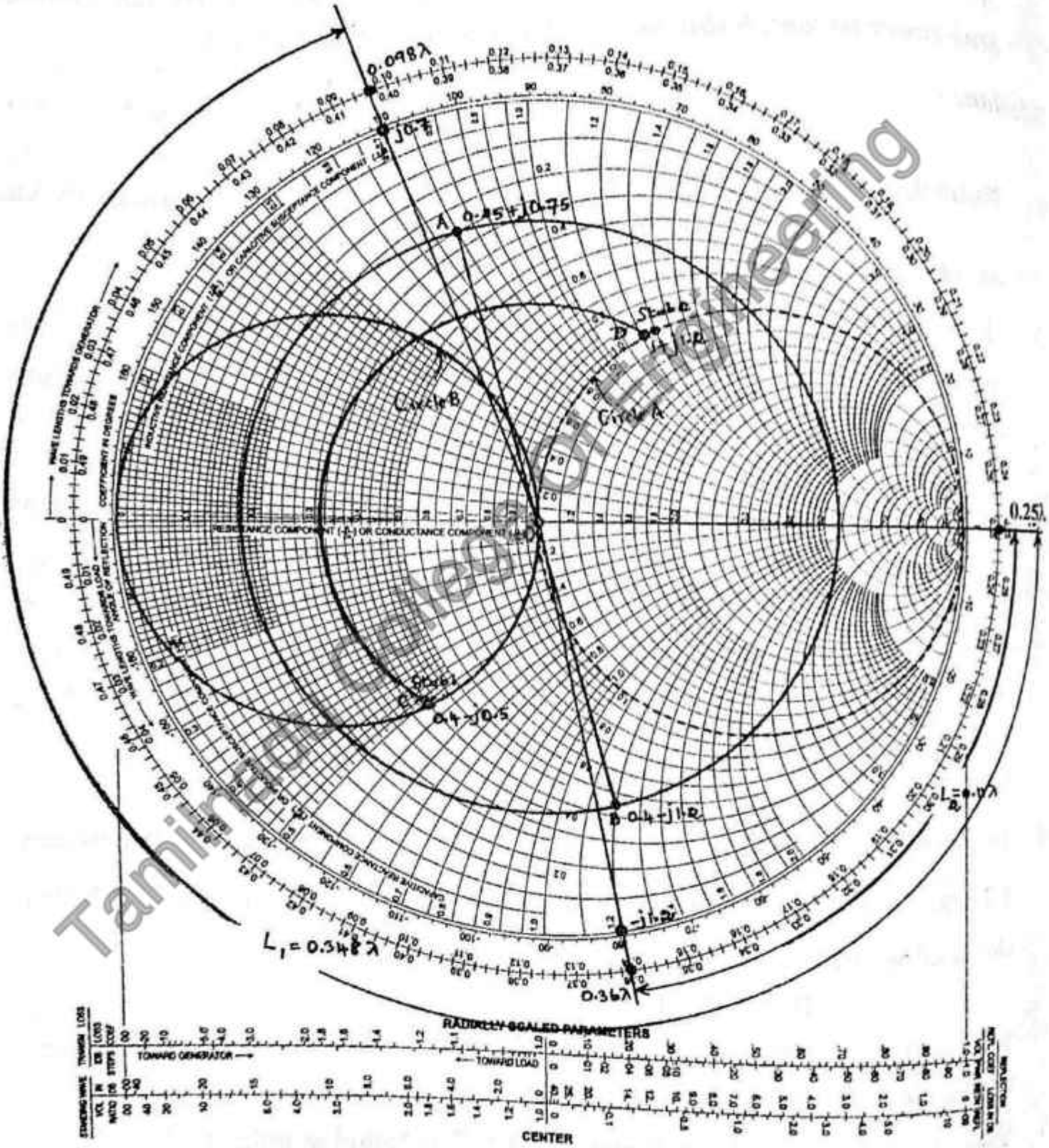

SMITH CHART

Tanimu Ibrahim Abdullahi Engineering

SOLVED PROBLEMS

Example 18

It is needed to match a resistance of 200 Ω to a 300 Ω transmission line to reduce the standing wave ratio along the line to 1. Determine the characteristic impedance of a suitable quarter wave transformer to be connected directly to the load.

Solution

Given that $Z_R = 200\,\Omega$ and $Z_s = 300\,\Omega$

At S = 1, reflection coefficient K = 0 then the line is perfectly matched. The characteristic impedance of a quarter wave transformer is

$$R_o = \sqrt{Z_s Z_R} = \sqrt{200 \times 300} = 245\,\Omega$$

Example 19

Design a quarter wave transformer to match a load of 200 Ω to a source resistance of 500 Ω. The operating frequency is 200 MHz.

Solution :

Given that $Z_R = 200\,\Omega$, $Z_s = 500\,\Omega$ and $f = 200 \times 10^6$ Hz

The characteristic impedance of a quarter wave transformer is

$$R_o = \sqrt{Z_s Z_R} = \sqrt{500 \times 200} = 316.22\,\Omega$$

The wavelength of the line is given by,

$$\lambda = \frac{c}{f} = \frac{3 \times 10^8}{200 \times 10^6} = 1.5\,m$$

The length of the quarter wave transformer is,

$$s = \frac{\lambda}{4} = \frac{1.5}{4} = 0.375\,m$$

Tamilnadu College Of Engineering

Example 20

An ideal lossless quarter wave line of characteristic impedance 60 ohm is terminated in a load impedance Z_R. Give the value of input impedance of the line when $Z_R = 0, \infty$ and Ω.

Solution :

Given that $R_o = 60\,\Omega$

The input impedance of quarter wave line is given by

$$Z_s = \frac{R_o^2}{Z_R}$$

When $Z_R = 0$

$$Z_s = \frac{(60)^2}{0} = \infty$$

When $Z_R = \infty$

$$Z_s = \frac{(60)^2}{\infty} = 0$$

When $Z_R = 60\,\Omega$

$$Z_s = \frac{(60)^2}{60} = 60\,\Omega$$

Example 21

A load of pure resistance of 60 Ω is to be connected through a quarterwave line to a transmission line of characteristic impedance 100 Ω. Calculate the value of the characterstic impedance of the quarter wave line.

Solution :

Given that $Z_r = 600\,\Omega$ and $Z_s = 100\,\Omega$

The characteristic impedance of a quarter wave line is

$$Z_o = \sqrt{Z_s\, Z_R} = \sqrt{100 \times 60} = 77.46\,\Omega$$

Tamilnadu College Of Engineering

Example 22

Determine the stub length and the distance of the stub from the load. Given that a complex load 50– j 100 is to be matched to a 75 Ω transmission line using a shortcircuited stub.

Solution :

Given that $Z_R = 50 - j\,100\ \Omega$ and $R_o = 75\ \Omega$

The reflection coefficient of the line is given by

$$K = \frac{Z_R - R_o}{Z_R + R_o} = \frac{50 - j\,100 - 75}{50 - j\,100 + 75} = \frac{-25 - j\,100}{125 - j\,100}$$

$$= \frac{103 \angle -104^\circ}{160 \angle -38.65^\circ} = 0.64 \angle -104^\circ - (-38.65^\circ)$$

$$= 0.64 \angle -65.35^\circ$$

Therefore $|K| = 0.64$ and Angle of reflection coefficient $\phi = -65.35^\circ$

or $\phi = -65.35^\circ \times \frac{\pi}{180^\circ} = -0.363\,\pi$ radian.

Location of the stub is given by

$$S_1 = \frac{\phi + \pi - \cos^{-1}(|K|)}{2\beta} \text{ where } \beta = \frac{2\pi}{\lambda}$$

$$= \frac{\lambda}{4\pi}\,[\phi + \pi - \cos^{-1}(|K|)]$$

$$= \frac{\lambda}{4\pi}\,[-0.363\,\pi + \pi - \cos^{-1}(0.64)]$$

$$= \frac{\lambda}{4\pi}\left[-0.363\,\pi + \pi - 50.2^\circ \times \frac{\pi}{180^\circ}\right]$$

$$= \frac{\lambda}{4\pi}\left[-0.363\,\pi + \pi - 0.28\,\pi\right]$$

$$= 0.089\,\lambda$$

Tamilnadu College Of Engineering

Length of the stub is given by,

$$L = \frac{\lambda}{2\pi} \tan^{-1} \frac{\sqrt{1-|K|^2}}{2|K|}$$

$$= \frac{\lambda}{2\pi} \tan^{-1} \frac{\sqrt{1-(0.64)^2}}{2(0.64)}$$

$$= \frac{\lambda}{2\pi} \tan^{-1}(0.6)$$

$$= \frac{\lambda}{2\pi} \times 30.976^\circ \times \frac{\pi}{180^\circ}$$

$$= 0.086\,\lambda$$

Example 23

A UHF lossless transmission line working at 1GHz is connected to a unmatched line producing a voltage reflection coefficient of 0.5 (0.866 + j0.5). Calculate the length and position of the stub to match a line.

Solution :

Giventhat $K = 0.5(0.866 + j0.5) = 0.433 + j0.25 = 0.5\angle 30^\circ$

Then $|K| = 0.5$

$$\phi = 30^\circ \text{ (or) } 30 \times \frac{\pi}{180} = \frac{\pi}{6} \text{ radian}$$

The wavelength is given by,

$$\lambda = \frac{c}{f} = \frac{3\times10^8}{1\times10^9} = 0.3m$$

Location of the stub is given by

$$S_1 = \frac{\phi + \pi - \cos^{-1}(|K|)}{2\beta} \quad \text{where } \beta = \frac{2\pi}{\lambda}$$

Tamilnadu College Of Engineering

$$= \frac{\lambda}{4\lambda}[\phi + \pi - \cos^{-1}(|K|)]$$

$$= \frac{0.3}{4\pi}\left[\frac{\pi}{6} + \pi - \cos^{-1}(0.5)\right]$$

$$= \frac{0.3}{4\pi}\left[\frac{\pi}{6} + \pi - 60^{\circ} \times \frac{\pi}{180}\right]$$

$$= 0.0625\ m$$

Length of the stub is given by

$$L = \frac{\lambda}{2\pi}\tan^{-1}\frac{\sqrt{1-|K|^2}}{2|K|}$$

$$= \frac{0.3}{2\pi}\tan^{-1}\frac{\sqrt{1-(0.5)^2}}{2(0.5)}$$

$$= \frac{0.3}{2\pi} \times 40.89^{\circ} \times \frac{\pi}{180}$$

$$= 0.0341\ m$$

Example 24

A 300 Ω line feeding an antenna, has a standing wave ratio of 4 and the distance from the load of the first voltage minima is 28cm. If the frequency is 150MHz, design a single stub matching system.

Solution :

Given that $R_o = 300\ \Omega$, S=4, $S_2 = 28\times10^{-2}$ and $f = 150\times10^{6}\,Hz$

The wavelength is given by

$$\lambda = \frac{3\times10^{8}}{150\times10^{6}} = 2m$$

Angle of reflection coefficient is given by,

$$S_2 = \frac{\phi+\pi}{2\beta} = \frac{\lambda}{4\pi}[\phi+\pi] \text{ where } \beta = \frac{2\pi}{\lambda}$$

Tamilnadu College Of Engineering

$$28 \times 10^{-2} = \frac{2}{4\pi} [\phi + \pi]$$

$$\phi = 2\pi(28 \times 10^{-2}) - \pi = \pi [2 (28 \times 10^{-2}) - 1] = -0.44\pi \text{ radian}$$

The reflection coefficient is given by

$$K = \frac{S-1}{S+1} = \frac{4-1}{4+1} = \frac{3}{5} = 0.6$$

Location of the stub is given by

$$S_1 = \frac{\phi + \pi - \cos^{-1}(|K|)}{2\beta} = \frac{\lambda}{4\pi} [\phi + \pi - \cos^{-1}(|K|)]$$

Where $\beta = \frac{2\pi}{\lambda}$

$$= \frac{2}{4\pi} [-0.44\pi + \pi - \cos^{-1}(0.6)]$$

$$= \frac{1}{2\pi} \left[-0.44\pi + \pi - 53.13^\circ \times \frac{\pi}{180^\circ} \right]$$

$$= 0.1325 \, m$$

Length of the stub is given by

$$L = \frac{\lambda}{2\pi} \tan^{-1} \frac{\sqrt{1 - |K|^2}}{2|K|}$$

$$= \frac{2}{2\pi} \tan^{-1} \frac{\sqrt{1 - (0.6)^2}}{2(0.6)}$$

$$= \frac{1}{\pi} \tan^{-1}(0.66)$$

$$= \frac{1}{\pi} \times 33.65^\circ \times \frac{\pi}{180^\circ}$$

$$= 0.18694 \, m$$

Tamilnadu College Of Engineering

Example 25

A lossless transmission line in air has a characteristic impedances of 300 Ω and it is transmited by an unknown impedance. When the frequency is 200MHz, the standing wave ratio is 4.48 and first voltage minima are situated at 6cm from the load. Determine the complex reflection coefficient and the terminating impedance of the line.

Solution :

Given that $R_o = 300\,\Omega$, $S = 4.48$, $S_2 = 6\times10^{-2}\,m$ and $f = 200\times10^{6}\,Hz$

The wavelength is given by,

$$\lambda = \frac{c}{f} = \frac{3\times10^{8}}{200\times10^{6}} = 1.5\,m$$

Angle of reflection coefficient is given by,

$$S_2 = \frac{\phi+\pi}{2\beta} = \frac{\lambda}{4\pi}[\phi+\pi] \text{ where } \beta = \frac{2\pi}{\lambda}$$

$$6\times10^{-2} = \frac{1.5}{4\pi}[\phi+\pi]$$

$$\phi = \frac{4\pi}{1.5}(6\times10^{-12}) - \pi = -2.64 \text{ radian}$$

or $$\phi = -2.64\times\frac{180^\circ}{\pi} = -151^\circ$$

The standing wave ratio and the reflection coefficient is related by,

$$|K| = \frac{S-1}{S+1} = \frac{4.48-1}{4.48+1} = 0.635$$

Therefore $K = |K|\angle\phi = 0.635\angle-151^\circ$

The reflection coefficient is given by,

$$K = \frac{Z_R - R_o}{Z_R + R_o}$$

Tamilnadu College Of Engineering

$$0.635 \angle -151^\circ = \frac{Z_R - 300}{Z_R + 300}$$

$$-0.55 - j\,0.308 = \frac{Z_R - 300}{Z_R + 300}$$

$$(Z_R + 300)(-0.55 - j\,0.308) = Z_R - 300$$

$$(1.55 + j\,0.308)\,Z_R = 135 - j\,92.4$$

$$Z_R = \frac{135 - j\,92.4}{1.55 + j\,0.308} = \frac{164 \angle -34.4^\circ}{1.57 \angle 11.30^\circ}$$

$$= 104.4 \angle -34.4^\circ - 11.30^\circ$$

$$= 104.4 \angle -45.7^\circ \ \Omega$$

Example 26

An UHF transmission line of $K = 0.33 \angle 36^\circ$, calculate the value of normlized load impedance.

Solution :

Given that $K = 0.33 \angle 36^\circ = 0.267 + j\,0.194$

The reflection coefficient and normalized load impedance are related by

$$K = \frac{Z_R - R_o}{Z_R + R_o} = \frac{\frac{Z_R}{R_o} - 1}{\frac{Z_R}{R_o} + 1} = \frac{Z_r - 1}{Z_r + 1}$$

Where z_r is the normalized load impedance

$$0.267 + j\,0.194 = \frac{Z_r - 1}{Z_r + 1}$$

$$Z_r = \frac{1.267 + j\,0.194}{0.733 + j\,0.194} = \frac{1.28 \angle 8.7^\circ}{0.76 \angle 14.8^\circ}$$

$$= 1.68 \angle -6.1^\circ$$

Tamilnadu College Of Engineering

Example 27

A load of admittance $\frac{Y_R}{G_0} = 1.25 + j\,0.25$. ***Find the length and location of single stub tuner short circuited.***

Solution:

The normalized load admittance is given by,

$$\frac{y_R}{G_0} = 1.25 + j\,0.25$$

$$\frac{1/Z_R}{1/R_0} = 1.25 + j\,0.25$$

$$\frac{R_0}{Z_R} = 1.25 + j\,0.25$$

The reflection coefficient is given by,

$$K = \frac{Z_R - R_0}{Z_R + R_0} = \frac{1 - \frac{R_0}{Z_R}}{1 + \frac{R_0}{Z_R}}$$

$$= \frac{1 - (1.25 + j\,0.25)}{1 + (1.25 + j\,0.25)} = \frac{-0.25 - j\,0.25}{2.25 + j\,0.25}$$

$$= \frac{0.3535 \angle -135^\circ}{2.2638 \angle 6.34^\circ}$$

$$= 0.1561 \angle -141.34^\circ = 0.1561 \angle -141.34^\circ + 360^\circ$$

$$= 0.1561 \angle 218.66^\circ$$

Therefore $|K| = 0.1561$ and $\phi = 218.66^\circ = 218.66^\circ \times \frac{\pi}{180^\circ} = 1.2148\pi$ rad

The location of the stub is given by,

$$S_1 = \frac{\phi + \pi - \cos^{-1}(|K|)}{2\beta} \quad \text{where } \beta = \frac{2\pi}{\lambda}$$

Tamilnadu College Of Engineering

$$= \frac{1.2148\pi + \pi - \cos^{-1}(0.1561)}{\frac{4\pi}{\lambda}} = \frac{\lambda}{4\pi}\left[1.2148\pi + \pi - 81^\circ \times \frac{\pi}{180^\circ}\right]$$

$$= 0.4412\,\lambda$$

The length of the stub is given by

$$L = \frac{\lambda}{2\pi}\tan^{-1}\left[\frac{\sqrt{1-|K|^2}}{2|K|}\right]$$

$$= \frac{\lambda}{2\pi}\tan^{-1}\left[\frac{\sqrt{1-(0.1561)^2}}{2(0.1561)}\right]$$

$$= \frac{\lambda}{2\pi}\tan^{-1}(3.16)$$

$$= \frac{\lambda}{2\pi} \times 72.46^\circ \times \frac{\pi}{180}$$

$$= 0.2013\,\lambda$$

Example 28

Determine length and location of a single short circuited stub to produce an impedance match on a transmission line with R_0 of 600 Ω and terminated in 1800 Ω.

Solution:

Reflection coefficient is given by

$$K = \frac{Z_R - R_0}{Z_R + R_0}$$

$$= \frac{1800 - 600}{1800 + 600} = \frac{1200}{2400}$$

$$= 0.5\angle 0^\circ$$

Therefore $|K| = 0.5$ and $\phi = 0^\circ$

Tamilnadu College Of Engineering

The location of the stub is given by

$$S_1 = \frac{\phi + \pi - \cos^{-1}(|K|)}{2\beta} \text{ where } \beta = \frac{2\pi}{\lambda}$$

$$= \frac{0 + \pi - \cos^{-1}(0.5)}{\frac{4\pi}{\lambda}} = \frac{\lambda}{4\pi}\left[\pi - 60^\circ \times \frac{\pi}{180^\circ}\right]$$

$$= 0.1667\,\lambda$$

The length of the stub is given by,

$$L = \frac{\lambda}{2\pi}\tan^{-1}\left[\frac{\sqrt{1-|K|^2}}{2|K|}\right]$$

$$= \frac{\lambda}{2\pi}\tan^{-1}\left[\frac{\sqrt{1-(0.5)^2}}{2\,(0.5)}\right]$$

$$= \frac{\lambda}{2\pi}\tan^{-1}(0.866)$$

$$= \frac{\lambda}{2\pi} \times 40.89 \times \frac{\pi}{180}$$

$$= 0.1135\,\lambda$$

Example 29

Determine a length and impedance of a quarter wave transformer that will match a 150Ω load to a 75 Ω line at a frequency of 12 GHz.

Solution:

The input impedance for a quarter wave transformer is given by,

$$Z_s = \frac{R_0^2}{Z_R}$$

$$= \frac{(75)^2}{150} = 37.5\Omega$$

Tamilnadu College Of Engineering

The wavelength is given by,

$$\lambda = \frac{c}{f} = \frac{3\times10^8}{12\times10^9} = 0.025\ m = 25\ cm$$

The length of quarter wave transformer is given by

$$s = \frac{\lambda}{4} = \frac{25}{4}$$

$$= 6.25\ cm$$

Example 30

A lossless line has Z_0 of 600 Ω and is connected to a series load of 75 Ω. Find the position and length of short circuited stub of same construction as line which would enable the main length of a line to be correctly terminated at 150 MHz.

Solution:

The wave length is given by

$$\lambda = \frac{c}{f} = \frac{3\times10^8}{150\times10^6} = 2m$$

The reflection coefficient is given by

$$K = \frac{Z_R - R_0}{Z_R + R_0}$$

$$= \frac{75-600}{75+600} = \frac{-525}{675}$$

$$= -0.7777 = 0.7777\ \angle 180^\circ$$

Therefore $|K| = 0.7777$ and $\phi = 180^\circ = 180^\circ \times \frac{\pi}{180^\circ} = \pi$ rad

The location of stub is given by

$$S_1 = \frac{\phi + \pi - \cos^{-1}(|K|)}{2\beta} \quad \text{where } \beta = \frac{2\pi}{\lambda}$$

$$= \frac{\lambda}{4\pi}[\pi + \pi - \cos^{-1}(0.7777)]$$

Tamilnadu College Of Engineering

$$= \frac{\lambda}{4\pi}\left[\pi + \pi - 38.95^{\circ} \times \frac{\pi}{180}\right]$$

$$= 0.8918\ m$$

The length of the stub is given by

$$L = \frac{\lambda}{2\pi}\tan^{-1}\left[\frac{\sqrt{1-(|K|)^2}}{2|K|}\right]$$

$$= \frac{2}{2\pi}\tan^{-1}\left[\frac{\sqrt{1-(0.7777)^2}}{2\times 0.7777}\right]$$

$$= \frac{1}{\pi}\tan^{-1}(0.404)$$

$$= \frac{1}{\pi}\times 22^{\circ}\times\frac{\pi}{180}$$

$$= 0.1222\ m$$

Example 31

A single stub is to match a 400 Ω line to a load of 200 – j 100 Ω. The wavelength is 3m. Determine the shortest distance from the load to the stub location and the proper length of the shot circuited stub.

Solution:

The reflection coefficient is given by

$$K = \frac{Z_R - R_0}{Z_R + R_0}$$

$$= \frac{200 - j100 - 400}{200 - j100 + 400} = \frac{-200 - j100}{600 - j100}$$

$$= \frac{223.60\angle -153.43}{608.28\angle -9.46} = 0.36\angle -143.97^{\circ}$$

Tamilnadu College Of Engineering

$$= 0.36 \angle -143.97^\circ + 360^\circ = 0.36 \angle 216.03$$

Therefore $|K| = 0.36$ and $\phi = 216.03^\circ = 216.03^\circ \times \frac{\pi}{180^\circ} = 1.2\pi$

The location of the stub is given by

$$S_1 = \frac{\phi + \pi - \cos^{-1}(|K|)}{2\beta} \text{ where } \beta = \frac{2\pi}{\lambda}$$

$$= \frac{\lambda}{4\pi}[1.2\pi + \pi = \cos^{-1}(0.36)]$$

$$= \frac{3}{4\pi}\left[1.2\pi + \pi - 68.89 \times \frac{\pi}{180}\right]$$

$$= \frac{3}{4\pi}[1.2\pi + \pi - 0.38\pi]$$

$$= 1.365 \text{ m}$$

The length of the stub in given by

$$L = \frac{\lambda}{2\pi}\tan^{-1}\left[\frac{\sqrt{1-|K|^2}}{2|K|}\right]$$

$$= \frac{3}{2\pi}\tan^{-1}\left[\frac{\sqrt{1-(0.36)^2}}{2(0.36)}\right]$$

$$= \frac{3}{2\pi}\tan^{-1}(1.11)$$

$$= \frac{3}{2\pi} \times 48^\circ \times \frac{\pi}{180^\circ}$$

$$= 0.4 \text{ m}$$

Tamilnadu College Of Engineering

Example 32

A lossless line in air having a characteristic impedance of 300 Ω is terminated by an unknown impedance. The first voltage minimum is located at 15 cm from the load, the standing wave ratio is 3.3. Calculate the frequency and terminated impedance.

Solution:

Reflection coefficient is given by

$$K = \frac{S-1}{S+1}$$

$$= \frac{3.3-1}{3.3+1} = \frac{2.3}{4.3}$$

$$= 0.53 \angle 0^\circ$$

Therefore $|K| = 0.53$ and $\phi = 0^\circ$

Also $$|K| = \frac{Z_R - R_0}{Z_R + R_0} = 0.53$$

$$\frac{Z_R - 300}{Z_R + 300} = 0.53$$

$$Z_R - 300 = 0.53\,(Z_R + 300)$$

$$Z_R - 300 = 0.53\,Z_R + 159$$

$$0.47\,Z_R = 459$$

$$Z_R = 976\,\Omega$$

The first voltage minimum is given by

$$s' = \frac{\phi + \pi}{2\beta} \text{ where } \beta = \frac{2\pi}{\lambda}$$

$$15 = \lambda\left(\frac{0+\pi}{4\pi}\right)$$

$$0.25\,\lambda = 15$$

Tamilnadu College Of Engineering

$$\lambda = \frac{15}{0.25}$$
$$= 60 \text{ cm}$$

The frequency is given by

$$f = \frac{c}{\lambda}$$
$$= \frac{3\times10^8}{60\times10^{-2}}$$
$$= 5\times10^9 \text{ Hz}$$
$$= 5 \text{ GHz}$$

Example 33

A 200 + j 75 Ω load is to be matched to a 300 Ω line to give SWR = 1. Find the reactance of the stub and the characteristic impedance of the quarter wave transformer both connected directly to the load.

Solution:

Given that $Z_S = 300\ \Omega$ and $Z_R = 200 + j\,75\ \Omega$

The admittance of the line is given by

$$Y_R = G_{stub} + j\,B_{stub} - \frac{1}{Z_R}$$
$$= \frac{1}{200+j\,75} = \frac{1}{200+j\,75}\times\frac{200-j\,75}{200-j\,75}$$
$$= \frac{200-j\,75}{(200)^2+(75)^2} = \frac{200-j\,75}{45625}$$
$$= 0.004383 - j\,0.001643$$

Hence $G_{stub} = 0.004383\ \mho$ and $B_{stub} = -0.001643\ \mho$

The reactance is given by

$$X_{stub} = \frac{1}{B_{stub}} = \frac{1}{-0.001643}$$
$$= -608.64\ \Omega$$

Tamilnadu College Of Engineering

When stub is connected, $Y_R = G_{stub}$

But $R_{stub} = \dfrac{1}{G_{stub}} = \dfrac{1}{0.004383}$

$= 228.15\,\Omega$

The characteristic impedance is given by

$$R_0 = \sqrt{Z_S + R_{stub}} = \sqrt{300 \times 228.15}$$
$$= 261.61\,\Omega$$

Example 34

Design a single stub matching network for a transmission line operating at 500 MHz terminated with a load impedance of 300 + j 250 Ω and with a characteristic impedance of 100 Ω. Use short circuited shunt stub.

Solution:

Given that $R_0 = 100\,\Omega$, $Z_R = 300 + j\,250\,\Omega$ and $f = 500 \times 10^6$ Hz

The reflection coefficient is given by

$$K = \frac{Z_R - R_0}{Z_R + R_0}$$

$$= \frac{300 + j\,250 - 100}{300 + j\,250 + 100} = \frac{200 + j\,250}{400 + j\,250}$$

$$= \frac{320.1562 \angle 51.34^\circ}{471.699 \angle 32^\circ} = 0.6787 \angle 19.34^\circ$$

Therefore $|K| = 0.6787$ and $\phi = 19.34^\circ \times \dfrac{\pi}{180^\circ} = 0.3375$ rad

The wavelength is given by

$$\lambda = \frac{c}{f} = \frac{3 \times 10^8}{500 \times 10^6}$$
$$= 0.6 \text{ m}$$

Tamilnadu College Of Engineering

The location of the stub is given by

$$S_1 = \frac{\phi + \pi - \cos^{-1}(|K|)}{2\beta} = \frac{\lambda}{4\pi}\left[\phi + \pi - \cos^{-1}(|K|)\right]$$

$$S_1 = \frac{0.6}{4\pi}\left[0.3375 + \pi - \cos^{-1}(0.6787) \times \frac{\pi}{180}\right]$$

$$= 0.1267m$$

The length of the stub is given by

$$L = \frac{\lambda}{2\pi}\tan^{-1}\left[\frac{\sqrt{1-|K|^2}}{2|K|}\right]$$

$$= \frac{0.6}{2\pi}\tan^{-1}\left[\frac{\sqrt{1-(0.6787)^2}}{2(0.6787)}\right] \times \frac{\pi}{180}$$

$$= 0.0361 \text{ m}$$

Example 35

A 300 Ω transmission line is connected to a load impedance of 450 − j600 Ω at 10 MHz. Find the location and length of a short circuited stub required to match the line.

Solution:

Given that $R_0 = 300\,\Omega$, $Z_R = 450 - j\,600\,\Omega$ and $f = 10 \times 10^6$ Hz

The reflection coefficient is given by

$$K = \frac{Z_R - R_0}{Z_R + R_0}$$

$$= \frac{(450 - j\,600) - 300}{(450 - j\,600) + 300} = \frac{150 - j\,600}{750 - j\,600}$$

$$= \frac{618.4658 \angle -75.96^\circ}{960.4686 \angle -38.66^\circ} = 0.6439 \angle -37.3^\circ$$

Tamilnadu College Of Engineering

Therefore $|K| = 0.6439$ and $\phi = -37.3^\circ = -37.3^\circ \times \frac{\pi}{180^\circ} = -0.651$ rad

The wavelength is given by

$$\lambda = \frac{c}{f} = \frac{3\times10^8}{10\times10^6}$$

$$= 30 \text{ m}$$

The location of the stub is given by

$$S_1 = \frac{\lambda}{4\pi}\,[\phi + \pi - \cos^{-1}(|k|)]$$

$$= \frac{30}{4\pi}\,[-0.651 + \pi - \cos^{-1}(0.6439) \times \frac{\pi}{180}]$$

$$= 3.8659 \text{ m}$$

The length of the stub is given by

$$L = \frac{\lambda}{2\pi}\tan^{-1}\left[\frac{\sqrt{1-|K|^2}}{2|K|}\right]$$

$$= \frac{30}{2\pi}\tan^{-1}\left[\frac{\sqrt{1-(0.6439)^2}}{2\,(0.6439)}\right] \times \frac{\pi}{180}$$

$$= 2.5596 \text{ m}$$

Example 36

A lossless line of 50 Ω is terminated in impedance 60 – j 80 Ω at 300 MHz. Find the length and location of a single short circuited stub used to match impedance.

Solution:

Given that $R_0 = 50\Omega$, $Z_R = 60 - j\,80\,\Omega$ and $f = 300\times10^6$ Hz

The reflection coefficient is given by

$$K = \frac{Z_R - R_0}{Z_R + R_0}$$

Tamilnadu College Of Engineering

$$= \frac{(60 - j\,80) - 50}{(60 - j\,80) + 50} = \frac{10 - j\,80}{110 - j\,80}$$

$$= \frac{80.6225 \angle -82.87^\circ}{136.0147 \angle -36.03^\circ} = 0.5928 \angle -46.84^\circ$$

Therefore $|K| = 0.5928$ and $\phi = -46.84^\circ = -46.84^\circ \times \frac{\pi}{180} = -0.8175$ rad

The wavelength is given by

$$\lambda = \frac{c}{f} = \frac{3 \times 10^8}{300 \times 10^6}$$

$$= 1 \text{ m}$$

The location of the stub is given by

$$S_1 = \frac{\lambda}{4\pi}\left[\phi + \pi - \cos^{-1}(|K|)\right]$$

$$= \frac{\lambda}{4\pi}\left[-0.8175 + \pi - \cos^{-1}(0.5928) \times \frac{\pi}{180}\right]$$

$$= 0.1104 \text{ m}$$

The length of the stub is given by

$$L = \frac{\lambda}{2\pi}\tan^{-1}\left[\frac{\sqrt{1 - |K|^2}}{2|K|}\right]$$

$$= \frac{1}{2\pi}\tan^{-1}\left[\frac{\sqrt{1 - (0.5928)^2}}{2\,(0.5928)}\right] \times \frac{\pi}{180}$$

$$= 0.09496 \text{ m}$$

Example 37

A load impedance of $90 - j\,50\ \Omega$ is to be matched to a line of $50\ \Omega$ using single stub matching. Find length and position of the stub.

Solution:

Given that $R_0 = 50\,\Omega$ and $Z_R = 90 - j\,50\,\Omega$

Tamilnadu College Of Engineering

The reflection coefficient is given by

$$K = \frac{Z_R - R_0}{Z_R + R_0}$$

$$= \frac{90 - j\,50 - 50}{90 - j\,50 + 50} = \frac{40 - j\,50}{140 - j\,50}$$

$$= \frac{64.0312 \angle -51.34^\circ}{148.6606 \angle -19.65^\circ} = 0.4307 \angle -31.69^\circ$$

Therefore $|K| = 0.4307$ and $\phi = -31.69^\circ = -31.69^\circ \times \frac{\pi}{180^\circ} = -0.5531$ rad

The location of the stub is given by

$$S_1 = \frac{\lambda}{4\pi}\left[\phi + \pi - \cos^{-1}(|K|)\right]$$

$$= \frac{\lambda}{4\pi}\left[-0.5531 + \pi - \cos^{-1}(0.4307) \times \frac{\pi}{180}\right]$$

$$= 0.1164\ \lambda$$

The length of the stub is given by

$$L = \frac{\lambda}{2\pi}\tan^{-1}\left[\frac{\sqrt{1-|K|^2}}{2|K|}\right]$$

$$= \frac{\lambda}{2\pi}\tan^{-1}\left[\frac{\sqrt{1-(0.4307)^2}}{2(0.4307)}\right] \times \frac{\pi}{180}$$

$$= 0.128\ \lambda$$

Tamilnadu College Of Engineering

UNIT 4

WAVEGUIDE

4.1 INTRODUCTION

A wave is defined as a means of transporting energy from source to destination. A wave is a function of space and time. In some of applications, it is necessary to confine and guide the wave energy by guided structures. In such applications the fields are confined or restricted by boundaries of materials different from those of transmission path and the waves are said to be guided by these materials. Hence it is necessary to apply Maxwell's equations, certain mathematical restrictions or boundary conditions in order to fit the general solution to the particular problem. After applying boundary conditions, it may be possible to obtain a solution showing the form and type of wave transmission that can occur in the confined region. Typical examples of such structures used in guiding waves are coaxial lines, open wire lines and wave guides.

4.2 GENERAL WAVE BEHAVIOURS ALONG UNIFORM GUIDING STRUCTURES

Consider an electromagnetic wave propagating between a pair of parallel perfectly conducting planes of infinite extent in y and z directions as shown in figure 4.1. The conducting planes are placed at $x = 0$ and $x = a$. To study the behaviour of electromagnetic field between two conducting planes Maxwell's equations are solved subject to the appropriate boundary conditions.

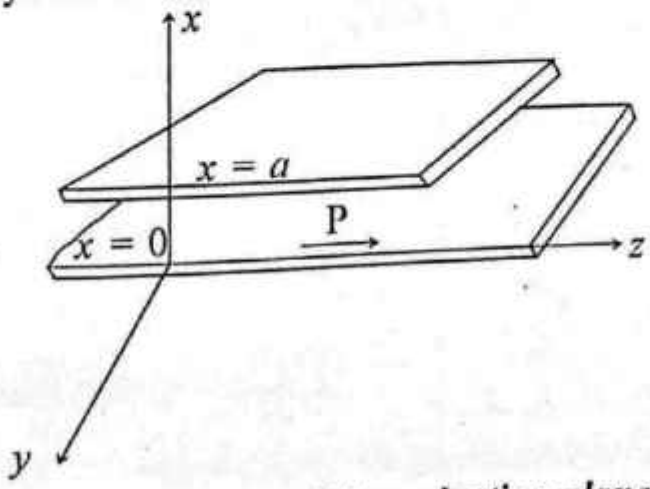

Figure 4.1 Parallel conducting planes.

Tamilnadu College Of Engineering

The boundary conditions are $E_{tangential} = 0$

$$H_{normal} = 0$$

The elecric field and magnetic field can be expressed as

$$E = [\vec{a}_x E_x(x,y) + \vec{a}_y E_y(x,y) + \vec{a}_z E_z(x,y)]e^{-\gamma z} \quad ...(1)$$

$$H = [\vec{a}_x H_x(x,y) + \vec{a}_y H_y(x,y) + \vec{a}_z H_z(x,y)]e^{-\gamma z} \quad ...(2)$$

Wave propagation is assumed to be in + z direction

We know that

$$\nabla \times H = \sigma E + j\omega\varepsilon E = E(\sigma + j\omega\varepsilon)$$

Assuming $\sigma = 0$

$$\nabla \times H = j\omega\varepsilon E \quad ...(3)$$

$$\nabla \times E = \frac{-\partial B}{\partial t} = -j\omega\mu H \quad ...(4)$$

Equation (3) can be written as

$$\begin{vmatrix} \vec{a}_x & \vec{a}_y & \vec{a}_z \\ \frac{\partial}{\partial_x} & \frac{\partial}{\partial_y} & \frac{\partial}{\partial_z} \\ H_x & H_y & H_z \end{vmatrix} = j\omega\varepsilon \quad [\vec{a}_x E_x(x,y) + \vec{a}_y E_y(x,y) + \vec{a}_z E_z(x,y)]$$

$$\vec{a}_x\left(\frac{\partial H_z}{\partial y} - \frac{\partial H_y}{\partial z}\right) - \vec{a}_y\left(\frac{\partial H_z}{\partial x} - \frac{\partial H_x}{\partial z}\right) + \vec{a}_z\left(\frac{\partial H_y}{\partial x} - \frac{\partial H_x}{\partial y}\right)$$

$$= \vec{a}_x \; j\omega\varepsilon E_x + \vec{a}_y j\omega\varepsilon E_y + \vec{a}_z j\omega\varepsilon E_z$$

Comparing $\vec{a}_x, \vec{a}_y, \vec{a}_z$ on both sides

$$\left.\begin{aligned} \frac{\partial H_z}{\partial y} - \frac{\partial H_y}{\partial z} &= j\omega\varepsilon E_x \\ \frac{\partial H_x}{\partial z} - \frac{\partial H_z}{\partial x} &= j\omega\varepsilon E_y \\ \frac{\partial H_y}{\partial x} - \frac{\partial H_x}{\partial y} &= j\omega\varepsilon E_z \end{aligned}\right\} \quad ...(5)$$

Tamilnadu College Of Engineering

Equation (4) can be written as

$$\begin{vmatrix} \vec{a}_x & \vec{a}_y & \vec{a}_z \\ \frac{\partial}{\partial x} & \frac{\partial}{\partial y} & \frac{\partial}{\partial z} \\ E_x & E_y & E_z \end{vmatrix} = -j\omega\mu[\vec{a}_x H_x(x,y) + \vec{a}_y H_y(x,y) + \vec{a}_z H_z(x,y)]$$

$$\vec{a}_x\left(\frac{\partial E_z}{\partial y} - \frac{\partial E_y}{\partial z}\right) - \vec{a}_y\left(\frac{\partial E_z}{\partial x} - \frac{\partial E_x}{\partial z}\right) + \vec{a}_z\left(\frac{\partial E_y}{\partial x} - \frac{\partial E_x}{\partial y}\right)$$

$$= -\vec{a}_x\, j\omega\mu H_x - \vec{a}_y\, j\omega\mu H_y - \vec{a}_z\, j\omega\mu H_z$$

Comparing $\vec{a}_x, \vec{a}_y, \vec{a}_z$ on both sides

$$\left.\begin{aligned} \frac{\partial E_z}{\partial y} - \frac{\partial E_y}{\partial z} &= -j\omega\mu H_x \\ \frac{\partial E_x}{\partial z} - \frac{\partial E_z}{\partial x} &= -j\omega\mu H_y \\ \frac{\partial E_y}{\partial x} - \frac{\partial E_x}{\partial y} &= -j\omega\mu H_z \end{aligned}\right\} \quad ...(6)$$

The wave equation is given by

$$\left.\begin{aligned} \frac{\partial^2 E}{\partial x^2} + \frac{\partial^2 E}{\partial y^2} + \frac{\partial^2 E}{\partial z^2} &= -\omega^2\mu\varepsilon E \\ \frac{\partial^2 H}{\partial x^2} + \frac{\partial^2 H}{\partial y^2} + \frac{\partial^2 H}{\partial z^2} &= -\omega^2\mu\varepsilon H \end{aligned}\right\} \quad ...(7)$$

It is assumed that the propagation is in z direction & the variation of field components in this z direction may be expressed in the form $e^{-\gamma z}$

Propagation constant $\gamma = \alpha + j\beta$

If $\alpha = 0$; $\gamma = j\beta$ the wave propagate without attenuation.

Tamilnadu College Of Engineering

If $\beta = 0; \gamma = \alpha$ there is no wave motion but only an exponential decrease in amplitude.

Let $H_y = H_y^\circ e^{-\gamma z}$

$$\frac{\partial H_y}{\partial z} = -\gamma e^{-\gamma z} H_y^\circ = -\gamma H_y$$

Similarty $\frac{\partial H_x}{\partial z} = -\gamma H_x$

Let $E_y = E_y^\circ e^{-\gamma z}$

$$\frac{\partial E_y}{\partial z} = -\gamma E_y$$

Similarly

$$\frac{\partial E_x}{\partial z} = -\gamma E_x$$

There is no variation in y direction, derivative of y is zero. Substitute the values of z derivatives and y derivatives in equation (5), (6) and (7)

$$\gamma H_y = j\omega\varepsilon E_x \quad ...(8a)$$

$$-\gamma H_x - \frac{\partial H_z}{\partial x} = j\omega\varepsilon E_y \quad ...(8b)$$

$$\frac{\partial H_y}{\partial x} = j\omega\varepsilon E_z \quad ...(8c)$$

$$\gamma E_y = -j\omega\mu H_x \quad ...(9a)$$

$$-\gamma E_x - \frac{\partial E_z}{\partial x} = -j\omega\mu H_y \quad ...(9b)$$

$$\frac{\partial E_y}{\partial x} = -j\omega\mu H_z \quad ...(9c)$$

$$\left.\begin{aligned} \frac{\partial^2 E}{\partial x^2} + \gamma^2 E &= -\omega^2\mu\varepsilon E \\ \frac{\partial^2 H}{\partial x^2} + \gamma^2 H &= -\omega^2\mu\varepsilon H \end{aligned}\right\} \quad ...(10)$$

Tamilnadu College Of Engineering

To Solve H_x:

From equation (8b)

$$E_y = -\frac{1}{j\omega\varepsilon}\left(\gamma H_x + \frac{\partial H_z}{\partial x}\right) \quad ...(11)$$

From equation (9a)

$$H_x = -\frac{1}{j\omega\mu}\gamma E_y \quad ...(12)$$

Substituting equation (11) in equation (12)

$$H_x = -\frac{\gamma}{j\omega\mu}\left[-\frac{1}{j\omega\varepsilon}\left(\gamma H_x + \frac{\partial H_z}{\partial x}\right)\right]$$

$$= \frac{-\gamma}{\omega^2\mu\varepsilon}\left[\gamma H_x + \frac{\partial H_z}{\partial x}\right]$$

$$H_x = -\frac{\gamma^2 H_x}{\omega^2\mu\varepsilon} - \frac{\gamma}{\omega^2\mu\varepsilon}\frac{\partial H_z}{\partial x}$$

$$H_x\left[1 + \frac{\gamma^2}{\omega^2\mu\varepsilon}\right] = -\frac{\gamma}{\omega^2\mu\varepsilon}\frac{\partial H_z}{\partial x}$$

$$H_x\left[\omega^2\mu\varepsilon + \gamma^2\right] = -\gamma\frac{\partial H_z}{\partial x}$$

$$H_x = \frac{-\gamma}{\gamma^2 + \omega^2\mu\varepsilon}\frac{\partial H_z}{\partial x}$$

$$H_x = \frac{-\gamma}{h^2}\frac{\partial H_z}{\partial x} \quad ...(13)$$

Where $h^2 = \gamma^2 + \omega^2\mu\varepsilon$

To solve H_y:

From equation (9b)

$$H_y = \frac{1}{j\omega\mu}\left[\gamma E_x + \frac{\partial E_z}{\partial x}\right] \quad ...(14)$$

From equation (8a)

$$E_x = \frac{1}{j\omega\varepsilon}[\gamma H_y] \quad ...(15)$$

Tamilnadu College Of Engineering

Substituting equation (15) in equation (14)

$$H_y = \frac{1}{j\omega\mu}\left[\gamma\left[\frac{\gamma H_y}{j\omega\varepsilon}\right] + \frac{\partial E_z}{\partial x}\right]$$

$$= \frac{1}{j\omega\mu}\left[\frac{\gamma^2 H_y}{j\omega\varepsilon} + \frac{\partial E_z}{\partial x}\right]$$

$$H_y = \frac{-\gamma^2 H_y}{\omega^2\mu\varepsilon} + \frac{1}{j\omega\mu}\frac{\partial E_z}{\partial x}$$

$$H_y\left[1 + \frac{\gamma^2}{\omega^2\mu\varepsilon}\right] = \frac{1}{j\omega\mu}\frac{\partial E_z}{\partial x}$$

$$H_y\left[\frac{\gamma^2 + \omega^2\mu\varepsilon}{\omega^2\mu\varepsilon}\right] = \frac{1}{j\omega\mu}\frac{\partial E_z}{\partial x}$$

$$H_y = -\frac{j\mu\varepsilon}{h^2}\frac{\partial E_z}{\partial x} \quad ...(16)$$

To solve E_x:

From equation (8a)

$$H_y = \frac{j\omega\varepsilon E_x}{\gamma} \quad ...(17)$$

From equation (9b)

$$\gamma E_x + \frac{\partial E_z}{\partial x} = j\omega\mu H_y \quad ...(18)$$

Substituting equation (17)in (18)

$$\gamma E_x + \frac{\partial E_z}{\partial x} = j\omega\mu\left[\frac{j\omega\varepsilon E_x}{\gamma}\right] = -\frac{\omega^2\mu\varepsilon E_x}{\gamma}$$

$$E_x\left[\frac{\gamma + \omega^2\mu\varepsilon}{\gamma}\right] = \frac{-\partial E_z}{\partial x}$$

$$E_x = \frac{-\gamma}{h^2}\frac{\partial E_z}{\partial x} \quad ...(19)$$

Tamilnadu College Of Engineering

To solve H_y:

$$\gamma H_x + \frac{\partial H_z}{\partial x} = -j\omega\varepsilon E_y \qquad ...(20)$$

From equation (9a)

$$H_x = \frac{-\gamma E_y}{j\omega\mu} \qquad ...(21)$$

Substituting (21) in (20)

$$\gamma\left[\frac{-\gamma E_y}{j\omega\mu}\right] + \frac{\partial H_z}{\partial x} = -j\omega\varepsilon E_y$$

$$\frac{-\gamma^2 E_y}{j\omega\mu} + \frac{\partial H_z}{\partial x} = -j\omega\varepsilon E_y$$

$$E_y\left(j\omega\varepsilon - \frac{\gamma^2}{j\omega\mu}\right) = \frac{-\partial H_z}{\partial x}$$

$$E_y = \frac{-\partial H_z}{\partial x}\,\frac{j\omega\mu}{-\omega^2\mu\varepsilon - \gamma^2}$$

$$E_y = \frac{j\omega\mu}{h^2}\,\frac{\partial H_z}{\partial x} \qquad ...(22)$$

The components of electricfield and magnetic field strength (E_x, E_y, H_x, H_y) are expressed in terms of E_z and H_z. It is observed that there must be a z component of either E or H otherwise all the components would be zero.

4.2.1 Transverse Electromagnetic Waves (TEM)

These are waves in which both electric field and magnetic field strength are entirely transverse. It has no component of E_z and H_z. It is also called as principal waves.

Characteristics of TEM waves

i) $\beta = \sqrt{\omega^2\mu\varepsilon - \left(\frac{m\pi}{a}\right)^2}$

Tamilnadu College Of Engineering

When m = 0

$$\beta = \omega\sqrt{\mu\varepsilon}$$

β varies lineraly with frequency and therefore the wave propagation takes place without dispertion.

ii) Phase velocity $V_{ph} = \frac{\omega}{\beta} = \frac{\omega}{\omega\sqrt{\mu\varepsilon}} = \frac{1}{\sqrt{\mu\varepsilon}}$

iii) $\lambda_g = \frac{2\pi}{\beta} = \frac{2\pi}{\omega\sqrt{\mu\varepsilon}} = \frac{2\pi}{2\pi f\sqrt{\mu\varepsilon}} = \frac{c}{f\sqrt{\mu_r\varepsilon_r}} = \frac{\lambda_o}{\sqrt{\varepsilon_r}}$

($\because \mu_r = 1$ for most of medium)

iv) $f_c = \frac{m}{2a\sqrt{\mu\varepsilon}}$ When m=0 ; f_c=0

v) $Z_{TEM} = \frac{E_x}{H_y} = \sqrt{\frac{\mu}{\varepsilon}} = 120\pi$ (*or*) $377\,\Omega$

4.2.2 Transverse Magnetic Waves (TM)

These are waves in which the magnetic field strength is entirely transverse. It has electric field strength in the direction of propagation and no component of magnetic field strength in same direction. ($H_z = 0$; $E_z \neq 0$)

4.2.3 Transverse Electric Waves (TE)

These are waves in which the electric field strength is entirely trasverse. It has magneticfield strength in the direction of propagation no component of electricfield strength in same direction. ($E_z = 0$; $H_z \neq 0$)

Characteristics of TE and TM waves

We know that

$$h^2 = \gamma^2 + \omega^2\mu\varepsilon$$

$$\gamma^2 = h^2 - \omega^2\mu\varepsilon$$

$$\gamma = \sqrt{h^2 - \omega^2\mu\varepsilon}$$

Tamilnadu College Of Engineering

Substitute $h = \frac{m\pi}{a}$

$$\gamma = \sqrt{\left(\frac{m\pi}{a}\right)^2 - \omega^2\mu\varepsilon}$$

$$\gamma = \alpha + j\beta$$

For very high frequency $\omega^2\mu\varepsilon > \left(\frac{m\pi}{a}\right)^2$

γ becomes imaginary

$$\gamma = j\beta = j\sqrt{\omega^2\mu\varepsilon - \left(\frac{m\pi}{a}\right)^2}$$

$$\beta = \sqrt{\omega^2\mu\varepsilon - \left(\frac{m\pi}{a}\right)^2}$$

As the frequency is decreased, a critical frequency is reached at which

$$\omega_c^2\mu\varepsilon = \left(\frac{m\pi}{a}\right)^2$$

$$\omega_c = \frac{m\pi}{a\sqrt{\mu\varepsilon}}$$

$$f_c = \frac{m}{2a\sqrt{\mu\varepsilon}}$$

The frequency at which wave motion ceases is called cut off frequency.

$$f_c = \frac{mv}{2a}$$

Where $v = \frac{1}{\sqrt{\mu\varepsilon}}$

Cut off wave length $\lambda_c = \frac{v}{f_c} = \frac{2a}{m}$

Tamilnadu College Of Engineering

$$v_{ph} = \frac{\omega}{\beta} = \frac{\omega}{\sqrt{\omega^2\mu\varepsilon - \left(\frac{m\pi}{a}\right)^2}}$$

$$= \frac{\omega}{\sqrt{\omega^2\mu\varepsilon - \omega_c{}^2\mu\varepsilon}} = \frac{\omega}{\omega\sqrt{\mu\varepsilon}\sqrt{1-\frac{\omega_c^2}{\omega^2}}}$$

$$v_{ph} = \frac{v}{\sqrt{1-\frac{f_c^2}{f^2}}}$$

Guide wave length $\lambda_g = \frac{2\pi}{\beta} = \frac{2\pi}{\sqrt{\omega^2\mu\varepsilon - \left(\frac{m\pi}{a}\right)^2}}$

$$= \frac{2\pi}{\sqrt{\omega^2\mu\varepsilon - \omega_c^2\mu\varepsilon}}$$

$$= \frac{2\pi}{\omega\sqrt{\mu\varepsilon}\sqrt{1-\frac{\omega_c^2}{\omega^2}}} = \frac{2\pi}{2\pi f\sqrt{\mu\varepsilon}\sqrt{1-\frac{f_c^2}{f^2}}}$$

$$= \frac{v}{f\sqrt{1-\frac{f_c^2}{f^2}}} = \frac{\lambda_o}{\sqrt{1-\frac{f_c^2}{f^2}}}$$

$$\lambda_g = \frac{\lambda_o}{\sqrt{1-\left(\frac{\lambda_o}{\lambda_c}\right)^2}}$$

$$= \frac{\lambda_o\,\lambda_c}{\sqrt{\lambda_c^2 - \lambda_o^2}}$$

Tamilnadu College Of Engineering

4.3 TM WAVES BETWEEN PARALLEL PLATES

TM wave are the waves in which magnetic field strength is entirely transverse. It has electric field strength in the direction of propagation and no component of magnetic field strength in the same direction. ($H_z = 0$; $E_z \neq 0$).

We know that

$$H_x = \frac{-\gamma}{h^2}\frac{\partial H_z}{\partial x} \quad \text{and} \quad E_y = \frac{j\omega\mu}{h^2}\frac{\partial H_z}{\partial x}$$

Substituting $H_z = 0$

$$H_x = 0; E_y = 0$$

The wave equation for component H_y

$$\frac{\partial^2 H_y}{\partial x^2} + \gamma^2 H_y = -\omega^2\mu\varepsilon H_y \qquad ...(1)$$

$$\frac{\partial^2 H_y}{\partial x^2} = -(\omega^2\mu\varepsilon + \gamma^2) H_y = -h^2 H_y$$

$$\frac{\partial^2 H_y}{\partial x^2} + h^2 H_y = 0$$

Let $H_y = H_y^\circ e^{-\gamma z}$ ...(2)

$$\frac{\partial H_y^\circ}{\partial x^2} + h^2 H_y^\circ = 0$$

This is the second order differential equation of simple harmonic motion. Solution of the above equation is,

$$H_y^\circ = C_3 \sinh x + C_4 \cosh x$$

$$H_y = (C_3 \sinh x + C_4 \cosh x) e^{-\gamma z} \qquad ...(3)$$

Where C_3 and C_4 are arbitary constants.

Boundary conditions can not be applied directly to H_y because $H_{tangential} \neq 0$ at the surface of conductor.

Tamilnadu College Of Engineering

Differentiating equation (3) with respect to x

$$\frac{\partial H_y}{\partial x} = h(C_3 \cos hx - C_4 \sin hx)e^{-\gamma z}$$

From equation (8c)

$$\frac{\partial H_y}{\partial x} = j\omega\varepsilon E_z$$

$$E_z = \frac{1}{j\omega\varepsilon}\frac{\partial H_y}{\partial x}$$

$$= \frac{h}{j\omega\varepsilon}(C_3 \cosh x - C_4 \sinh x)e^{-\gamma z} \quad ...(4)$$

Applying first boundary condition.

$$E_z = 0 \; at \;\; x=0$$

$$C_3 e^{-\gamma z}\frac{h}{j\omega\varepsilon} = 0$$

$$C_3 = 0$$

Equation (4) becomes

$$E_z = -\frac{hC_4 \sinh x e^{-\gamma z}}{j\omega\varepsilon}$$

Applying second boundary condition.

$$E_z = 0 \;\text{ at }\; x = a$$

$$\sin ha = 0$$

$$ha = \sin^{-1}(0) = m\pi$$

$$h = \frac{m\pi}{a} \qquad \text{Where m= 1,2...}$$

$$E_z = \frac{-C_4\left(\frac{m\pi}{a}\right)\sin\left(\frac{m\pi}{a}\right)x e^{-\gamma z}}{j\omega\varepsilon}$$

$$E_z = \frac{jC_4 \sin\left(\frac{m\pi x}{a}\right) m\pi}{\omega\varepsilon a} e^{-\gamma z}$$

Tamilnadu College Of Engineering

$$H_y = \int j\omega\varepsilon E_z \, d_x$$

$$= \int j\omega\varepsilon \frac{jw\varepsilon \, jC_4 \sin\left(\frac{m\pi x}{a}\right) m\pi \; e^{-\gamma z}}{\omega\varepsilon a} d_x$$

$$H_y = C_4 \cos\left(\frac{m\pi}{a}\right) x e^{-\gamma z}$$

But $\gamma H_y = j\omega\varepsilon E_x$

$$E_x = \frac{\gamma}{j\omega\varepsilon} H_y$$

$$= \frac{\gamma}{j\omega\varepsilon}\left[C_4 \cos\left(\frac{m\pi}{a}\right) x \, e^{-\gamma z}\right]$$

The field strength for TM waves between parallel planes are

$$H_y = C_4 \cos\left(\frac{m\pi}{a}\right) x e^{-\gamma z}$$

$$E_x = \frac{\gamma}{j\omega\varepsilon} C_4 \cos\left(\frac{m\pi}{a}\right) x \, e^{-\gamma z}$$

$$E_z = \frac{jm\pi}{\omega\varepsilon a} C_4 \sin\left(\frac{m\pi}{a}\right) x \, e^{-\gamma z}$$

Transverse magnetic wave associated with intger m is designated as TM_{mo} wave (or) TM_{mo} mode. If m=0 all the fields will not be equal to zero. E_x and H_y exist and only E_z=0 .In the case of TM waves there is a possibility of m =0.

If the wave propagate without attenuation $\alpha = 0$, $\gamma = j\beta$

$$H_y = C_4 \cos\left(\frac{m\pi}{a}\right) x e^{-j\beta z}$$

$$E_x = \frac{\beta}{\omega\varepsilon} C_4 \cos\left(\frac{m\pi}{a}\right) x \, e^{-j\beta z}$$

$$E_z = \frac{jm\pi}{\omega\varepsilon a} C_4 \sin\left(\frac{m\pi}{a}\right) x \, e^{-j\beta z}$$

Tamilnadu College Of Engineering

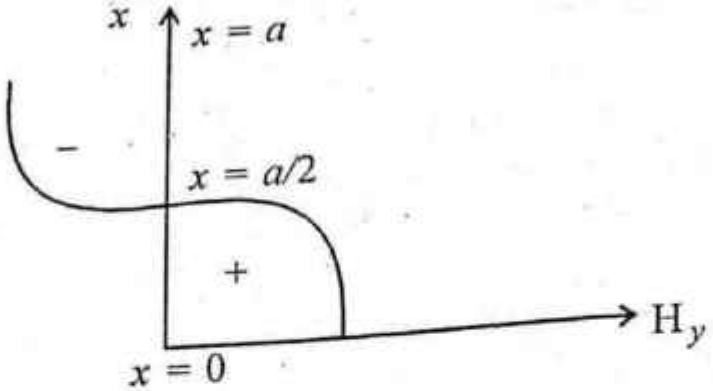

Figure 4.2 H_y *as a function of x for* TM_{10} *mode.*

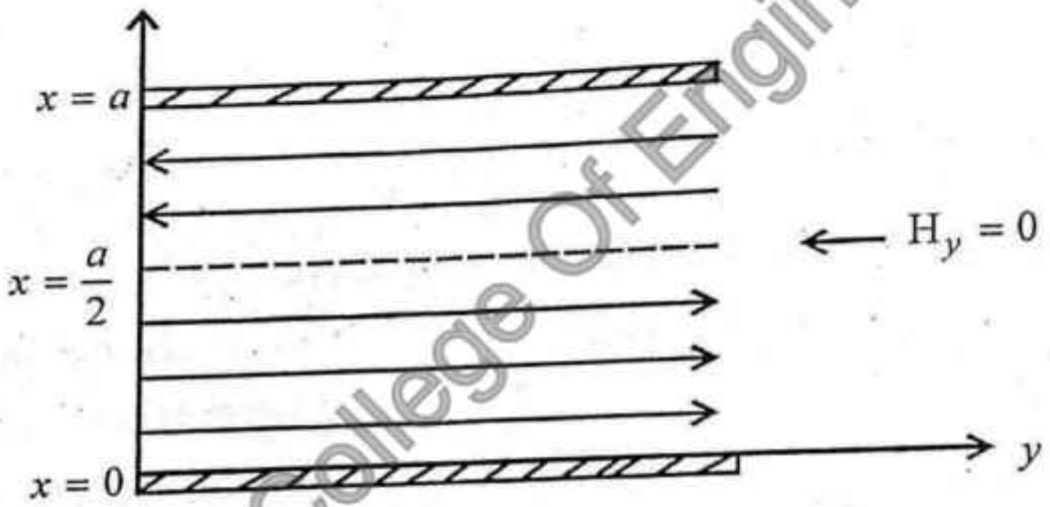

Figure 4.3 H_y *as a function of y for* TM_{10} *mode.*

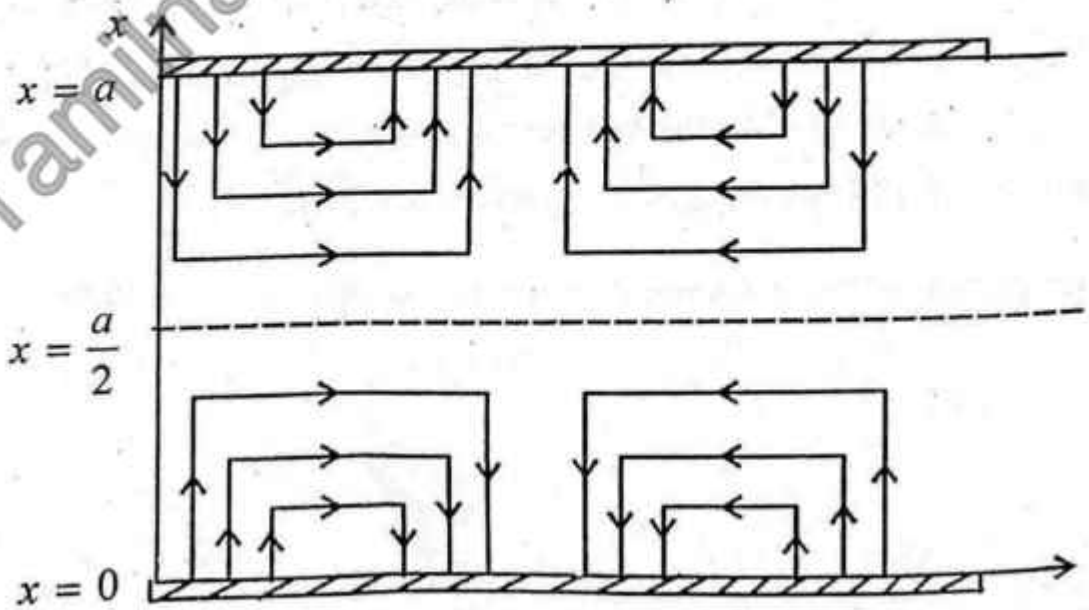

Figure 4.4 Combined field distribution of E_z *and* E_x *for* TM_{10} *mode.*

Tamilnadu College Of Engineering

4.4 TE WAVES BETWEEN PARALLEL PLATES

Transverse electric waves are the waves in which electric field strength is entirely transverse. It has magneticfield strength in the direction of propagation and there is no electricfield component in the direction of propagation. ($E_z = 0; H_z \neq 0$)

We know that

$$E_x = \frac{-\gamma}{h^2} \frac{\partial E_z}{\partial x} ; H_y = -\frac{-j\omega\varepsilon}{h^2} \frac{\partial E_z}{\partial x}$$

Substituting $E_z = 0$

$$E_x = 0 \text{ and } H_y = 0$$

The wave equation for E_y is given by

$$\frac{\partial^2 E_y}{\partial x^2} + \gamma^2 E_y = -\omega^2 \mu\varepsilon E_y \quad ...(1)$$

$$\frac{\partial^2 E_y}{\partial x^2} = -(\omega^2 \mu\varepsilon + \gamma^2) E_y = -h^2 E_y$$

$$\frac{\partial^2 E_y}{\partial x^2} + h^2 E_y = 0$$

Let $E_y = E_y^\circ e^{-\gamma z}$ ...(2)

$$\frac{\partial^2 E_y^\circ}{\partial x^2} + h^2 E_y^\circ = 0 \quad ...(3)$$

This is the differential equation of simple harmonic motion. The solution of this equation is given by

$$E_y^\circ = C_1 \sin hx + C_2 \cos hx \quad ...(4)$$

Where C_1 and C_2 are arbitary constants.

Substituting equation (4) in (2)

$$E_y = (C_1 \sinh x + C_2 \cosh x) e^{-\gamma z} \quad ...(5)$$

Tamilnadu College Of Engineering

C_1 and C_2 can be determined from boundary conditions.

$$E_y = 0 \ at \ x = 0$$

$$E_y = 0 \ at \ x = a$$

Applying first boundary condition

$$0 = 0 + C_2 e^{-\gamma z}$$

$$C_2 = 0$$

Substituting $C_2 = 0$ in equation (5)

$$E_y = C_1 \sin hx \ e^{-\gamma z}$$

Applying second boundary condition

$$C_1 \sin h_a \ e^{-\gamma z} = 0$$

Assuming $C_1 \neq 0$

$$\sin ha = 0 \Rightarrow ha = \sin^{-1}(0) \Rightarrow ha = m\pi \Rightarrow h = \frac{m\pi}{a}; \ m = 1, 2, ..$$

$$E_y = C_1 \sin\left(\frac{m\pi}{a}\right) x e^{-\gamma z}$$

From (9a)

$$\gamma E_y = -j\omega\mu H_x$$

$$H_x = \frac{-\gamma E_y}{j\omega\mu} = \frac{-\gamma}{j\omega\mu}\left[C_1 \sin\left(\frac{m\pi}{a}\right) x e^{-\gamma z}\right]$$

From (9c)

$$\frac{\partial E_y}{\partial x} = -j\omega\mu H_z$$

$$H_z = \frac{-1}{j\omega\mu}\left[\frac{\partial E_y}{\partial x}\right]$$

$$= \frac{-1}{j\omega\mu}\left[\frac{\partial}{\partial x}(C_1 \sin\left(\frac{m\pi}{a}\right) x \cdot e^{-\gamma z})\right]$$

$$= \frac{jm\pi}{\omega\mu a} C_1 \cos\left(\frac{m\pi}{a}\right) x \cdot e^{-\gamma z}$$

Tamilnadu College Of Engineering

Field strength for TE waves between parallel planes are

$$E_y = C_1 \sin\left(\frac{m\pi}{a}\right) x e^{-\gamma z}$$

$$H_x = \frac{-\gamma}{j\omega\mu} C_1 \sin\left(\frac{m\pi}{a}\right) x e^{-\gamma z}$$

$$H_z = \frac{jm\pi}{\omega\mu a} C_1 \cos\left(\frac{m\pi}{a}\right) x e^{-\gamma z}$$

Each value of m specifies a particular field of configuration (or) mode and wave associated with integer m is designated as TE_{mo} mode. The second subscript refers to another integer which varies with y. If m=0 all the fields become zero $E_y = 0$, $H_x = 0$, $H_z = 0$ therefore lowest value of m =1. The lowest order mode is TE_{10}. This is called dominant mode in TE waves.

$\gamma = \alpha + j\beta$ if the wave propagate without attenuation $\alpha = 0$, $\gamma = j\beta$.

$$E_y = C_1 \sin\left(\frac{m\pi}{a}\right) x e^{-\gamma\beta z}$$

$$H_x = \frac{-\beta}{\omega\mu} C_1 \sin\left(\frac{m\pi}{a}\right) x e^{-j\beta z}$$

$$H_z = \frac{jm\pi}{\omega\mu a} C_1 \cos\left(\frac{m\pi}{a} x\right) x e^{-j\beta z}$$

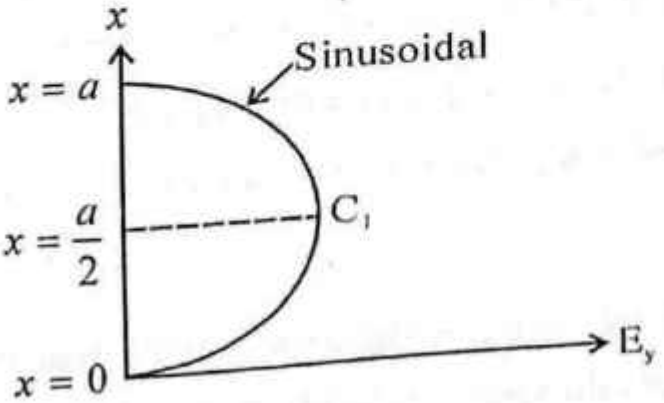

Figure 5.5 E_y as a function of x for TE_{10} mode.

Tamilnadu College Of Engineering

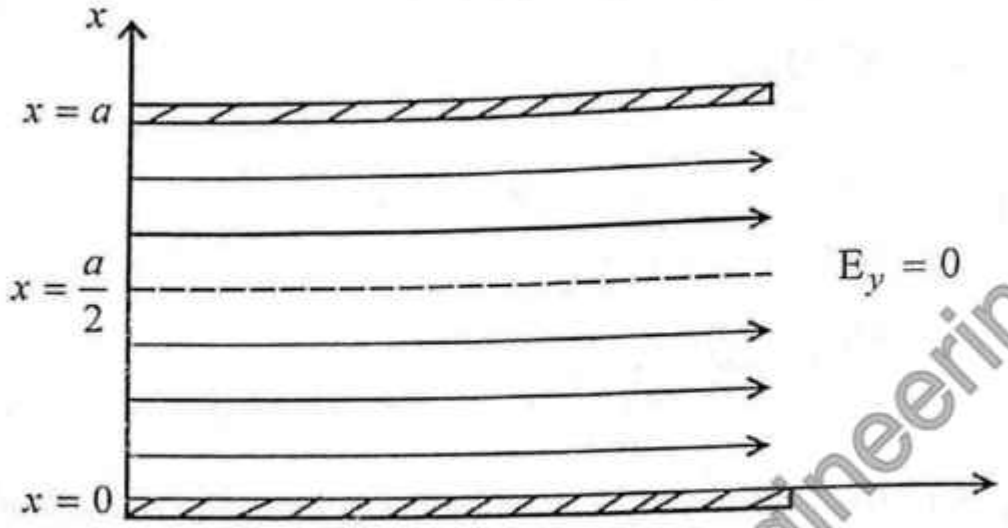

Figure 5.6 E_y as a function of y for TE_{10} mode.

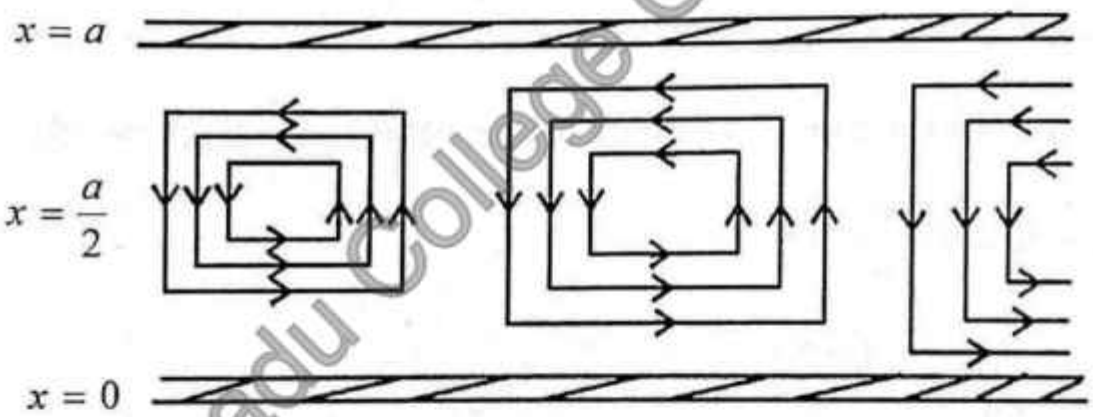

Figure 5.7 Combined field distribution of H_x & H_z for TE_{10} mode.

5.5 RECTANGULAR WAVEGUIDE.

A hollow conducting metallic tube of uniform cross section (rectangular or circular) is used for propagating electromagnetic waves and the waves guided along the walls of the tubee is called wave guide

In rectangular waveguide, the guide is oriented with two faces in the planes of axes and that dimension a is height in x direction, b is width in y direction. The guide is made up of perfectly metal walls and is filled with dielectric with constants μ_1, ε_1.

Tamilnadu College Of Engineering

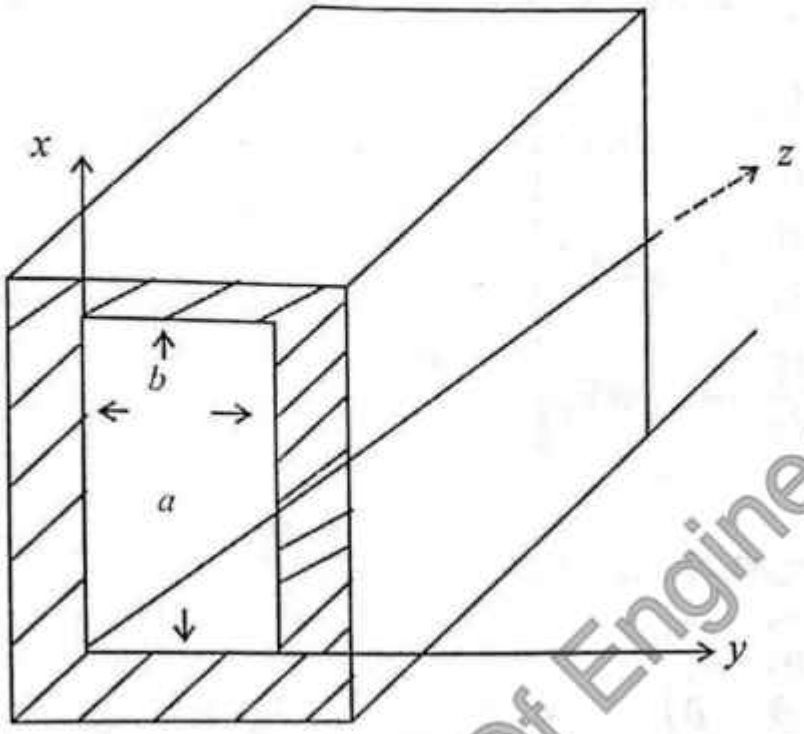

Figure 5.8 Cross section of rectangular waveguide.

The propagation of energy takes place in z- direction with length of guide being infinite in z direction. The field components of electric field and magnetic field are obtained by solving Maxwell's equations by applying appropriate boundary conditions.

We know that

$$\nabla \times H = j\omega\varepsilon E$$

$$\nabla \times H = \begin{vmatrix} \vec{a}_x & \vec{a}_y & \vec{a}_z \\ \frac{\partial}{\partial x} & \frac{\partial}{\partial y} & \frac{\partial}{\partial z} \\ H_x & H_y & H_z \end{vmatrix} = j\omega\varepsilon\left[\vec{a}_x E_x + \vec{a}_y E_y + \vec{a}_z E_z\right]$$

$$\vec{a}_x\left[\frac{\partial H_z}{\partial y} - \frac{\partial H_y}{\partial z}\right] - \vec{a}_y\left[\frac{\partial H_z}{\partial x} - \frac{\partial H_x}{\partial z}\right] + \vec{a}_z\left[\frac{\partial H_y}{\partial x} - \frac{\partial H_x}{\partial y}\right]$$

$$= j\omega\varepsilon\left[\vec{a}_x E_x + \vec{a}_y E_y + \vec{a}_z E_z\right]$$

Tamilnadu College Of Engineering

Equating $\vec{a}_x, \vec{a}_y, \vec{a}_z$ on both sides

$$\left.\begin{aligned}\frac{\partial H_z}{\partial y} - \frac{\partial H_y}{\partial z} &= j\omega\varepsilon E_x \\ \frac{\partial H_x}{\partial z} - \frac{\partial H_z}{\partial x} &= j\omega\varepsilon E_y \\ \frac{\partial H_y}{\partial x} - \frac{\partial H_x}{\partial y} &= j\omega\varepsilon E_z\end{aligned}\right\} \quad ...(1)$$

Similarly

$$\nabla \times E = -j\omega\mu H$$

$$\begin{vmatrix}\vec{a}_x & \vec{a}_y & \vec{a}_z \\ \frac{\partial}{\partial x} & \frac{\partial}{\partial y} & \frac{\partial}{\partial z} \\ E_x & E_y & E_z\end{vmatrix} = -j\omega\mu\left[\vec{a}_x H_x + \vec{a}_y H_y + \vec{a}_z H_z\right]$$

$$\vec{a}_x\left[\frac{\partial E_z}{\partial y} - \frac{\partial E_y}{\partial z}\right] - \vec{a}_y\left[\frac{\partial E_z}{\partial x} - \frac{\partial E_x}{\partial z}\right] + \vec{a}_z\left[\frac{\partial E_y}{\partial x} - \frac{\partial E_x}{\partial y}\right]$$

$$= -j\omega\mu\left[\vec{a}_x H_x + \vec{a}_y H_y + \vec{a}_z H_z\right]$$

Equating $\vec{a}_x, \vec{a}_y, \vec{a}_z$ on both sides

$$\left.\begin{aligned}\frac{\partial E_z}{\partial y} - \frac{\partial E_y}{\partial z} &= -j\omega\mu H_x \\ \frac{\partial E_x}{\partial z} - \frac{\partial E_z}{\partial x} &= -j\omega\mu H_y \\ \frac{\partial E_y}{\partial x} - \frac{\partial E_x}{\partial y} &= -j\omega\mu H_z\end{aligned}\right\} \quad ...(2)$$

Similarly for wave equation

$$\left.\begin{aligned}\frac{\partial^2 E}{\partial x^2} + \frac{\partial^2 E}{\partial y^2} + \frac{\partial^2 E}{\partial z^2} &= -\omega^2\mu\varepsilon E \\ \frac{\partial^2 H}{\partial x^2} + \frac{\partial^2 H}{\partial y^2} + \frac{\partial^2 H}{\partial z^2} &= -\omega^2\mu\varepsilon E\end{aligned}\right\} \quad ...(3)$$

Tamilnadu College Of Engineering

Let $H_y = H_y^\circ \; e^{-\gamma z}$

$$\frac{\partial H_y}{\partial z} = -\gamma H_y^\circ \; e^{-\gamma z} = -\gamma H_y$$

Similarly

$$\frac{\partial H_x}{\partial z} = -\gamma H_x$$

Let $E_y = E_y^\circ \; e^{-\gamma z}$

$$\frac{\partial E_y}{\partial z} = -\gamma E_y^\circ \; e^{-\gamma z} = -\gamma E_y$$

Similarly

$$\frac{\partial E_x}{\partial z} = -\gamma E_x$$

Sbustituting these derivatives in equation (1) and (2)

$$\frac{\partial H_z}{\partial y} + \gamma H_y = j\omega\varepsilon E_x \qquad ...(4)$$

$$\gamma H_x + \frac{\partial H_z}{\partial x} = -j\omega\varepsilon E_y \qquad ...(5)$$

$$\frac{\partial H_y}{\partial x} - \frac{\partial H_x}{\partial y} = j\omega\varepsilon E_z \qquad ...(6)$$

$$\frac{\partial E_z}{\partial y} + \gamma E_y = -j\omega\mu H_x \qquad ...(7)$$

$$\frac{\partial E_z}{\partial x} + \gamma E_x = j\omega\mu H_y \qquad ...(8)$$

$$\frac{\partial E_y}{\partial x} - \frac{\partial E_x}{\partial y} = -j\omega\mu H_z \qquad ...(9)$$

Wave equation becomes

$$\left.\begin{aligned} \frac{\partial^2 E_z}{\partial x^2} + \frac{\partial^2 E_z}{\partial y^2} + \gamma^2 E_z &= -\omega^2 \mu\varepsilon E_z \\ \frac{\partial^2 H_z}{\partial x^2} + \frac{\partial^2 H_z}{\partial y^2} + \gamma^2 H_z &= -\omega^2 \mu\varepsilon H_z \end{aligned}\right\} \qquad ...(10)$$

Tamilnadu College Of Engineering

Solving equation (5) and (7)

From equation (7)

$$H_x = \frac{-1}{j\omega\mu}\left[\frac{\partial E_z}{\partial y} + \gamma E_y\right]$$

Substituting in equation (5)

$$\frac{\partial H_z}{\partial x} + \gamma\left(\frac{-1}{j\omega\mu}\left(\frac{\partial E_z}{\partial y} + \gamma E_y\right)\right) = -j\omega\varepsilon E_y$$

$$\frac{\partial H_z}{\partial x} - \frac{\gamma\partial E_z}{j\omega\mu\partial y} - \frac{\gamma^2 E_y}{j\omega\mu} = -j\omega\varepsilon E_y$$

$$\frac{\partial H_z}{\partial x} - \frac{\gamma}{j\omega\mu}\frac{\partial E_z}{\partial y} = \left(\frac{\gamma^2}{j\omega\mu} - j\omega\varepsilon\right)E_y$$

$$j\omega\mu\frac{\partial H_z}{\partial x} - \gamma\frac{\partial E_z}{\partial y} = (\gamma^2 + \omega^2\mu\varepsilon)E_y = h^2 E_y$$

$$E_y = \frac{j\omega\mu}{h^2}\frac{\partial H_z}{\partial x} - \frac{\gamma}{h^2}\frac{\partial E_z}{\partial y} \quad \text{... (11)}$$

From equation (5)

$$E_y = \frac{-1}{j\omega\varepsilon}\left[\frac{\partial H_z}{\partial x} + \gamma H_x\right]$$

Substituting in (7)

$$\frac{\partial E_z}{\partial y} + \gamma\left[\frac{-1}{j\omega\varepsilon}\left(\frac{\partial H_z}{\partial x}\right) + \gamma H_x\right] = -j\omega\mu H_x$$

$$\frac{\partial E_z}{\partial y} - \frac{\gamma}{j\omega\varepsilon}\frac{\partial H_z}{\partial x} - \frac{\gamma^2 H_z}{j\omega\varepsilon} = -j\omega\mu H_x$$

$$\frac{\partial E_z}{\partial y} - \frac{\gamma}{j\omega\varepsilon}\frac{\partial H_z}{\partial x} = \left(\frac{\gamma^2}{j\omega\varepsilon} - j\omega\mu\right)H_x$$

$$\frac{j\omega\varepsilon\partial E_z}{\partial y} - \gamma\frac{\partial H_z}{\partial x} = (\gamma^2 + \omega^2\mu\varepsilon)H_x$$

$$H_x = \frac{j\omega\varepsilon}{h^2}\frac{\partial E_z}{\partial y} - \frac{\gamma}{h^2}\frac{\partial H_z}{\partial x} \quad \text{... (12)}$$

Tamilnadu College Of Engineering

Solving equations(4) and (8)

From equation (4)

$$E_x = \frac{\gamma H_y}{j\omega\varepsilon} + \frac{1}{j\omega\varepsilon}\frac{\partial H_z}{\partial y}$$

Substituting in equation (8)

$$\frac{\partial E_z}{\partial x} + \gamma\left[\frac{\gamma H_y}{j\omega\varepsilon} + \frac{1}{j\omega\varepsilon}\frac{\partial H_z}{\partial y}\right] = j\omega\mu H_y$$

$$\frac{\partial E_z}{\partial x} + \frac{\gamma^2 H_y}{j\omega\varepsilon} + \frac{\gamma}{j\omega\varepsilon}\frac{\partial H_z}{\partial y} = j\omega\mu H_y$$

$$\frac{j\omega\varepsilon\partial E_z}{\partial x} + \gamma^2 H_y + \gamma\frac{\partial H_z}{\partial y} = -\omega^2\mu\varepsilon H_y$$

$$\frac{j\omega\varepsilon\partial E_z}{\partial x} + \gamma\frac{\partial H_z}{\partial y} = -(\omega^2\mu\varepsilon + \gamma^2)H_y = -h^2 H_y$$

$$H_y = -\frac{\gamma}{h^2}\frac{\partial H_z}{\partial y} - \frac{j\omega\varepsilon}{h^2}\frac{\partial E_z}{\partial x} \quad \text{... (13)}$$

From equation (8)

$$H_y = \frac{1}{j\omega\mu}\frac{\partial E_z}{\partial x} + \frac{\gamma}{j\omega\mu}E_x$$

Substituting in equation (4)

$$\frac{\partial H_z}{\partial y} + \gamma\left[\frac{1}{j\omega\mu}\frac{\partial E_z}{\partial x} + \frac{\gamma}{j\omega\mu}E_x\right] = j\omega\varepsilon E_x$$

$$\frac{\partial H_z}{\partial y} + \frac{\gamma^2}{j\omega\mu}E_x + \frac{\gamma}{j\omega\mu}\frac{\partial E_z}{\partial x} = j\omega\varepsilon E_x$$

$$\frac{j\omega\mu\partial H_z}{\partial y} + \gamma^2 E_x + \gamma\frac{\partial E_z}{\partial x} = -\omega^2\mu\varepsilon E_x$$

$$\frac{j\omega\mu\partial H_z}{\partial y} + \gamma\frac{\partial E_z}{\partial x} = -(\omega^2\mu\varepsilon + \gamma^2)E_x = -h^2 E_x$$

$$E_x = -\frac{\gamma}{h^2}\frac{\partial E_z}{\partial x} - \frac{j\omega\mu}{h^2}\frac{\partial H_z}{\partial y} \quad \text{...(14)}$$

Tamilnadu College Of Engineering

The above equations are in terms of E_z and H_z. For wave propagation either E_z or H_z should exist. If both E_z and H_z are zero, all the fields with in the guide will vanish. wave propagation within the guide is divided into two sets.

- ✓ Transverse electric waves ($E_z = 0$; $H_z \neq 0$)
- ✓ Transverse magnetic waves ($H_z = 0$; $E_z \neq 0$)

5.5.1 TM waves in Rectangular Waveguide

Wave equation for E_z is given by,

$$\frac{\partial^2 E_z}{\partial x^2} + \frac{\partial^2 E_z}{\partial y^2} + \frac{\partial^2 E_z}{\partial z^2} = -\omega^2 \mu\varepsilon E_z \quad ...(1)$$

Let
$$\frac{\partial E_z}{\partial z} = -\gamma E_z$$

$$\frac{\partial^2 E_z}{\partial z^2} = \gamma^2 E_z$$

$$\frac{\partial^2 E_z}{\partial x^2} + \frac{\partial^2 E_z}{\partial y^2} + \gamma^2 E_z = -\omega^2 \mu\varepsilon E_z \quad ...(2)$$

The wave equation is second order partial differential equation that can be solved by product solution.

E_z can be written as

$$E_z(x, y, z) = E_z^\circ(x, y) e^{-\gamma z} \quad ...(3)$$

Let $E_z^\circ = XY$ ...(4)

Where X is a function of x alone
Y is a function of y alone

Substituting the value of E_z° in equation (2)

$$Y\frac{\partial^2 X}{\partial x^2} + X\frac{\partial^2 Y}{\partial y^2} + \gamma^2 XY = -\omega^2 \mu\varepsilon XY$$

$$Y\frac{\partial^2 X}{\partial x^2} + X\frac{\partial^2 Y}{\partial y^2} + (\gamma^2 + \omega^2 \mu\varepsilon) XY = 0$$

$$Y\frac{\partial^2 X}{\partial x^2} + X\frac{\partial^2 Y}{\partial y^2} + h^2 XY = 0$$

Tamilnadu College Of Engineering

Divide by XY

$$\frac{1}{X}\frac{\partial^2 X}{\partial x^2}+\frac{1}{Y}\frac{\partial^2 Y}{\partial y^2}+h^2=0$$

$$\frac{1}{X}\frac{\partial^2 X}{\partial x^2}+h^2=-\frac{1}{Y}\frac{\partial^2 Y}{\partial y^2} \quad ...(5)$$

The above equation equates a function of x alone to a function of y alone and the only way for above equation to be true is to have each of these function equal to some constant A^2.

$$\frac{1}{X}\frac{\partial^2 X}{\partial x^2}+h^2=A^2$$

$$\frac{1}{X}\frac{\partial^2 X}{\partial x^2}+h^2-A^2=0$$

Let $B^2=h^2-A^2$

$$\frac{1}{X}\frac{\partial^2 X}{\partial x^2}+B^2=0 \quad ...(6)$$

The solution of the equation (6) is given by

$$X=C_1\cos Bx+C_2\sin Bx \quad ...(7)$$

$$\frac{1}{Y}\frac{\partial^2 Y}{\partial y^2}=-A^2 \quad ...(8)$$

The solution of the equation (8) is given by

$$Y=C_3\cos Ay+C_4\sin Ay \quad ...(9)$$

Substituting equation (7) and (9) in (4)

$$E_z^\circ=XY=(C_1\cos Bx+C_2\sin Bx)(C_3\cos Ay+C_4\sin Ay)$$

$$=C_1C_3\cos Bx\cos Ay+C_1C_4\cos Bx\sin Ay+C_2C_3\sin Bx\cos Ay$$

$$+C_2C_4\sin Bx\sin Ay \quad ...(10)$$

The constants C_1, C_2, C_3, C_4, A and B are to be determined by using appropriater boundary conditions.

Tamilnadu College Of Engineering

$E_z^\circ = 0$ When $x = 0,\ x = a,\ y = 0,\ y = b$

When $x = 0$, equation (10)become

$$E_z^\circ = C_1 C_3 \cos Ay + C_1 C_4 \sin Ay = 0$$

For the above equation to be true for all values of y, $C_1 = 0$

Equation (10) becomes

$$E_z^\circ = C_2 C_3 \sin Bx \cos Ay + C_2 C_4 \sin Bx \sin Ay \quad ...(11)$$

When $y = 0$ equation (11) becomes

$$E_z^\circ = C_2 C_3 \sin Bx = 0 \text{ (Assuming } B \neq 0)$$

This is possible only if either $C_2 = 0$, or $C_3 = 0$. If $C_2 = 0$, E_z° is identially zero.

so substituting $C_3 = 0$ in equation (11)

$$E_z^\circ = C_2 C_4 \sin Bx \sin Ay$$

Let $C = C_2 C_4$

$$E_z^\circ = C \sin Bx \sin Ay \quad ...(12)$$

Applying boundary conditions in order to evaluate the constants A and B

It $x = a$; $E_z^\circ = 0$ equation (12) become

$C \sin Ba \sin Ay = 0$

The above equation is ture for all values of y when $A \neq 0$

$$\sin Ba = 0$$

$$Ba = \sin^{-1}(0)$$

$$Ba = m\pi$$

$$B = \frac{m\pi}{a} \qquad \text{When } m = 1,2....$$

Substituting $B = \dfrac{m\pi}{a}$ in equation (12)

$$E_z^\circ = C \sin\left(\frac{m\pi}{a}\right) x \sin Ay \quad ...(13)$$

If $y = b$; $E_z^\circ = 0$

$$E_z^\circ = C \sin\left(\frac{m\pi x}{a}\right) \sin Ab = 0$$

Tamilnadu College Of Engineering

The above equation is true if

$$\sin Ab = 0$$

$$Ab = \sin^{-1}(0)$$

$$Ab = n\pi$$

$$A = \frac{n\pi}{b} \quad ; \quad n = 1,2 \ldots$$

Substituting $A = \frac{n\pi}{b}$ in equation (13)

$$E_z^\circ = C\sin\left(\frac{m\pi}{a}\right)x\sin\left(\frac{n\pi}{b}\right)y$$

The general field components with $H_z = 0$ and $\gamma = j\beta$ is given by

$$E_x^\circ = \frac{-j\beta}{h^2}\frac{\partial E_z^\circ}{\partial x}$$

$$= \frac{-j\beta}{h^2} CB\cos Bx\sin Ay$$

$$E_y^\circ = \frac{-j\beta}{h^2}\frac{\partial E_z^\circ}{\partial y}$$

$$= \frac{-j\beta}{h^2} AC\sin Bx\cos Ay$$

$$H_x^\circ = \frac{j\omega\varepsilon}{h^2}\frac{\partial E_z^\circ}{\partial y}$$

$$= \frac{j\omega\varepsilon AC}{h^2}\sin Bx\cos Ay$$

$$H_y^\circ = \frac{-j\omega\varepsilon}{h^2}\frac{\partial E_z^\circ}{\partial x} = \frac{-j\omega\varepsilon}{h^2} CB\cos Bx\sin Ay$$

Where $A = \frac{n\pi}{b}$; $B = \frac{m\pi}{a}$

If $m = 0$ or $n = 0$ the fields for TM wave will be identically zero. So the lowest possible value for m or n is unity. $(m = 1; n = 1)$ for TM waves. This particular wave is called TM_{11} mode.

Tamilnadu College Of Engineering

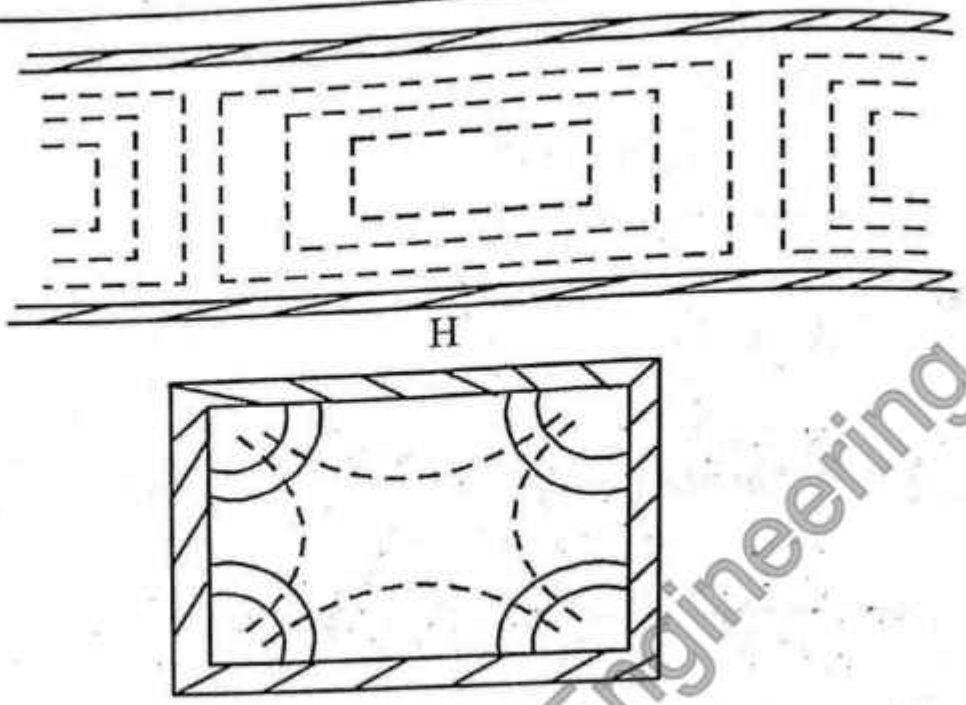

TM_{11} Wave

Figure 5.9 Electric field and magnetic field configuration for TM_{11} in rectangular waveguide

5.5.2 TE Waves in Rectangular Waveguide.

Wave equation for H_z is given by

$$\frac{\partial^2 H_z}{\partial x^2} + \frac{\partial^2 H_z}{\partial y^2} + \frac{\partial^2 H_z}{\partial z^2} = -\omega^2 \mu\varepsilon H_z \qquad ...(1)$$

Let $$\frac{\partial H_z}{\partial z} = -\gamma H_z$$

$$\frac{\partial^2 H_z}{\partial z^2} = \gamma^2 H_z$$

$$\frac{\partial^2 H_z}{\partial x^2} + \frac{\partial^2 H_z}{\partial y^2} + \gamma^2 H_z = -\omega^2 \mu\varepsilon H_z \qquad ...(2)$$

The wave equation is second order partial differential equation that can be solved by product solution.

H_z can be written as

$$H_z(x, y, z) = H_z^{\circ}(x, y) e^{-\gamma z} \qquad ...(3)$$

Tamilnadu College Of Engineering

Let $H_z^\circ = XY$ ...(4)

Where X is a function of x alone

Y is a function of y alone

Substituting the value of H_z° in equation (2)

$$Y\frac{\partial^2 X}{\partial x^2} + X\frac{\partial^2 Y}{\partial y^2} + \gamma^2 XY = -\omega^2 \mu\varepsilon XY$$

$$Y\frac{\partial^2 X}{\partial x^2} + X\frac{\partial^2 Y}{\partial y^2} + (\gamma^2 + \omega^2 \mu\varepsilon)\, XY = 0$$

$$Y\frac{\partial^2 X}{\partial x^2} + x\frac{\partial^2 Y}{\partial y^2} + h^2 XY = 0$$

Divide by XY

$$\frac{1}{X}\frac{\partial^2 X}{\partial x^2} + \frac{1}{Y}\frac{\partial^2 Y}{\partial y^2} + h^2 = 0$$

$$\frac{1}{X}\frac{\partial^2 X}{\partial x^2} + h^2 = -\frac{1}{Y}\frac{\partial^2 Y}{\partial y^2} \quad ...(5)$$

The above equation equates a function of x alone to a function of y alone and the only way for the above equation to be true is to have each of these function equal to some constant A^2

$$\frac{1}{X}\frac{\partial^2 X}{\partial x^2} + h^2 = A^2$$

$$\frac{1}{X}\frac{\partial^2 X}{\partial x^2} + h^2 - A^2 = 0$$

Let $B^2 = h^2 - A^2$

$$\frac{1}{X}\frac{\partial^2 X}{\partial x^2} + B^2 = 0 \quad ...(6)$$

Tamilnadu College Of Engineering

The solution of the equation (6) is given by

$$X = C_1 \cos Bx + C_2 \sin Bx \quad ...(7)$$

$$\frac{1}{Y}\frac{\partial^2 y}{\partial y^2} = -A^2 \quad ...(8)$$

The solution of the equation (8) is given by

$$Y = C_3 \cos Ay + C_4 \sin Ay \quad ...(9)$$

Substituting equation (7) and (9) in (4)

$$H_z^\circ = XY = (C_1 \cos Bx + C_2 \sin Bx)(C_3 \cos Ay + C_4 \sin Ay)$$

$$= C_1 C_3 \cos Bx \cos Ay + C_1 C_4 \cos Bx \sin Ay + C_2 C_3 \sin Bx \cos Ay + C_2 C_4 \sin Bx \sin Ay \quad ...(10)$$

C_1, C_2, C_3, C_4, A and B are to be determined using boundary conditions. The tangential component of electric field is continuous and $E_{tan} = 0$ at the boundary for a perfect conductor.

$$E_x^\circ = \frac{-j\omega\mu}{h^2}\frac{\partial H_z^\circ}{\partial y}$$

$$= \frac{-j\omega\mu}{h^2}\begin{bmatrix} -AC_1 C_3 B \sin Ay \cos By + AC_1 C_4 \sin Bx \sin Ay \\ -C_2 C_3 A \cos Bx \cos Ay + A C_2 C_4 \cos Bx \sin Ay \end{bmatrix} ...(11)$$

$$E_y^\circ = \frac{j\omega\mu}{h^2}\frac{\partial H_z^\circ}{\partial x}$$

$$= \frac{j\omega\mu}{h^2}\begin{bmatrix} -C_1 C_3 B \sin Bx \cos Ay - C_1 C_4 B \sin Bx \sin Ay \\ +C_2 C_3 B \cos Bx \cos Ay + B C_2 C_4 \cos Bx \sin Ay \end{bmatrix} ...(12)$$

$E_y^\circ = 0$ at $x = 0$

Equation (12) becomes

$$E_y^\circ = \frac{j\omega\mu}{h^2}(C_2 C_3 B \cos Ay + B C_2 C_4 \sin Ay) = 0$$

Tamilnadu College Of Engineering

The above equation is true only if $C_2 = 0$

Substituting $C_2 = 0$ in equation (12)

$$E_y^\circ = \frac{j\omega\mu}{h^2}[-C_1 C_3 B \sin Bx \cos Ay - C_1 C_4 B \sin Bx \sin Ay] \quad ...(13)$$

$$E_y^\circ = 0 \text{ at } x = a$$

Equation (13) becomes

$$E_y^\circ = \frac{j\omega\mu}{h^2}[-C_1C_3 B \sin Ba \cos Ay - C_1 C_4 B \sin Ba \sin Ay] = 0$$

This is true only if

$$\sin Ba = 0$$

$$Ba = \sin^{-1}(0) = m\pi$$

$$B = \frac{m\pi}{a} \quad \text{Where } m = 1,2,...$$

Substituting $B = \frac{m\pi}{a}$ in equation (13)

$$E_y^\circ = \frac{j\omega\mu}{h^2}\left[-C_1C_3\left(\frac{m\pi}{a}\right)\sin\left(\frac{m\pi}{a}\right)x\cos Ay - C_1C_4\left(\frac{m\pi}{a}\right)\sin\left(\frac{m\pi}{a}\right)x\sin Ay\right] \quad ...(14)$$

$$E_x^\circ = 0 \; ; \; y = 0$$

Equation (11) becomes

$$E_x^\circ = \frac{-j\omega\mu}{h^2}[A C_1 C_4 \cos Bx \cos Ay + A C_2 C_4 \sin Bx \cos Ay] = 0$$

The above equation is true only for $C_4 = 0$

Substituting $C_4 = 0$ in equation (11)

$$E_x^\circ = \frac{-j\omega\mu}{h^2} A\,[-C_1 C_3 \cos Bx \sin Ay - C_2 C_3 \sin Bx \sin Ay] \quad ...(15)$$

$$E_x^\circ = 0 \; at \; y = b$$

Equation (15) becomes

$$E_x^\circ = \frac{-j\omega\mu}{h^2} A\,[-C_1 C_3 \cos Bx \sin Ab - C_2C_3 \sin Bx \sin Ab] = 0$$

Tamilnadu College Of Engineering

This is true only if, $\sin Ab = 0$

$$Ab = \sin^{-1}(0) = n\pi$$

$$A = \frac{n\pi}{b} \qquad \text{Where } n = 1,2,\ldots$$

Equation (15) becomes

$$E_x^\circ = \frac{j\omega\mu}{h^2} A \left[C_1 C_3 \cos\left(\frac{m\pi}{a}\right) x \sin\left(\frac{n\pi}{b}\right) y + C_2 C_3 \sin\left(\frac{m\pi}{a}\right) x \sin\left(\frac{n\pi}{b}\right) y \right] \quad \ldots(16)$$

Using $C_2 = 0,\ C_4 = 0,\ A = \frac{n\pi}{b}, B = \frac{m\pi}{a}, C_1 C_3 = C, \gamma = j\beta$ in equation (10)

$$H_z^\circ = C \cos Bx \cos Ay$$

The general field components become

$$E_x^\circ = \frac{-j\omega\mu}{h^2} \frac{\partial H_z^\circ}{\partial y}$$

$$= \frac{-j\omega\mu}{h^2}[C\cos Bx(-\sin Ay)A] = \frac{j\omega\mu AC}{h^2} \cos Bx \sin Ay$$

$$H_x^\circ = \frac{-j\beta}{h^2} \frac{\partial H_z^\circ}{\partial x}$$

$$= \frac{-j\beta}{h^2} CB \sin Bx \cos Ay$$

$$H_y^\circ = \frac{-j\beta}{h^2} \frac{\partial H_z^\circ}{\partial y}$$

$$= \frac{j\beta}{h^2} CA \cos Bx \sin Ay$$

$$E_y^\circ = \frac{-j\omega\mu}{h^2} BC \sin Bx \cos Ay$$

Where $A = \frac{n\pi}{b}, B = \frac{m\pi}{a}$

Tamilnadu College Of Engineering

TE_{10} mode is dominant mode in rectangular wave.

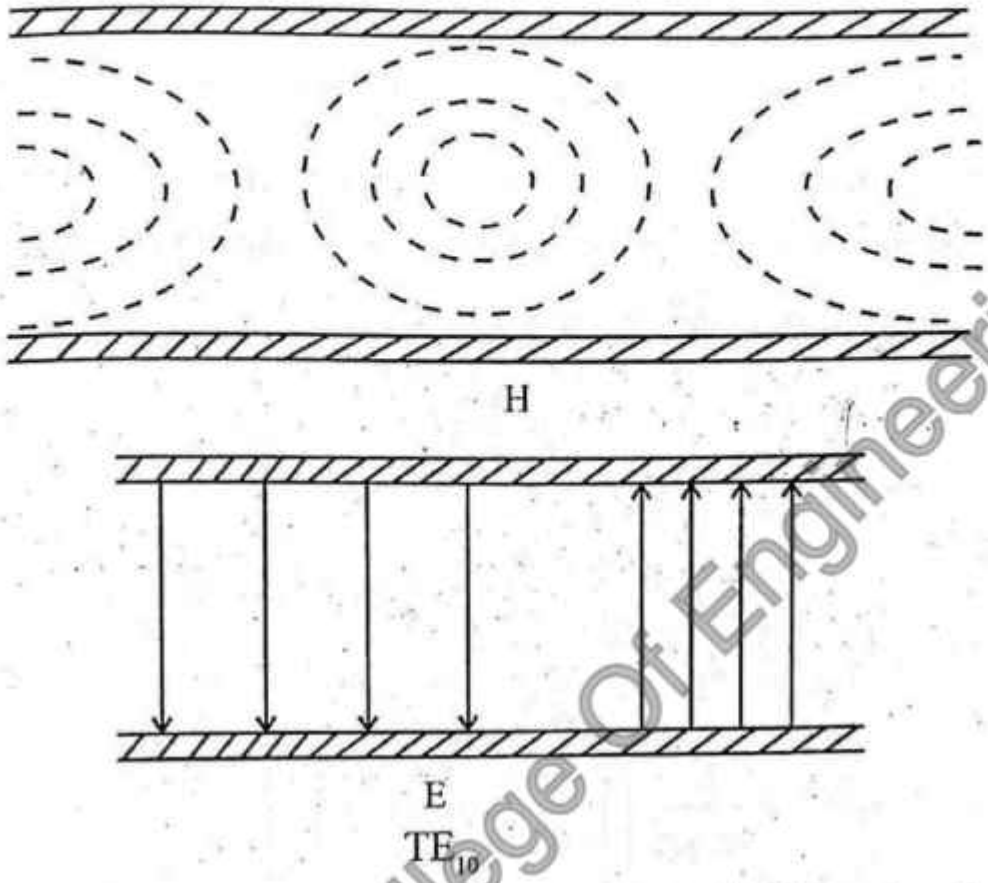

Figure 5.10 Electric field and magnetic field configuration for TE_{10} in rectangular wave guide.

5.5.3 Characteristics of TE and TM Waves in Rectangular Waveguide.

We know that

$$A^2 + B^2 = h^2$$

Where $A = \frac{n\pi}{b}$, $B = \frac{m\pi}{a}$, m and n are integers

$$h^2 = \gamma^2 + \omega^2 \mu\varepsilon$$

$$\gamma^2 = h^2 - \omega^2\mu\varepsilon$$

$$\gamma = \sqrt{h^2 - \omega^2\mu\varepsilon}$$

$$= \sqrt{A^2 + B^2 - \omega^2\mu\varepsilon}$$

$$\gamma = \sqrt{\left(\frac{m\pi}{a}\right)^2 + \left(\frac{n\pi}{b}\right)^2 - \omega^2\mu\varepsilon}$$

Tamilnadu College Of Engineering

This is the equation of propagation constant in rectangular waveguide for TE or TM waves.

For small frequencies $\gamma = \alpha$, γ is real and there is no wave propagation.

As frequency increases and reaches a particular value f_c, γ becomes zero. For all values of f greater than f_c, γ is imaginary, $\gamma = j\beta$, wave propagation takes place.

At $f = f_c$, $\gamma = 0$; $h^2 = \omega_c^2 \mu\varepsilon$

$$\omega_c^2 \mu\varepsilon = \left(\frac{m\pi}{a}\right)^2 + \left(\frac{n\pi}{b}\right)^2$$

$$4\pi^2 f_c^2 \mu\varepsilon = \left(\frac{m\pi}{a}\right)^2 + \left(\frac{n\pi}{b}\right)^2$$

$$f_c^2 = \frac{1}{4\pi^2 \mu\varepsilon}\left[\left(\frac{m\pi}{a}\right)^2 + \left(\frac{n\pi}{b}\right)^2\right]$$

Cut off frequency $f_c = \dfrac{1}{2\pi\sqrt{\mu\varepsilon}}\sqrt{\left(\dfrac{m\pi}{a}\right)^2 + \left(\dfrac{n\pi}{b}\right)^2}$

$$= \frac{1}{2\sqrt{\mu\varepsilon}}\sqrt{\left(\frac{m}{a}\right)^2 + \left(\frac{n}{b}\right)^2}$$

$f < f_c$, $\gamma = \alpha = \sqrt{h^2 - \omega^2 \mu\varepsilon}$

$f > f_c$, $\gamma = j\beta$

$$= \sqrt{-(\omega^2 \mu\varepsilon - h^2)} = j\sqrt{\omega^2 \mu\varepsilon - h^2}$$

$$j\beta = j\sqrt{\omega^2 \mu\varepsilon - \left(\frac{m\pi}{a}\right)^2 - \left(\frac{n\pi}{b}\right)^2}$$

Phase constant $\beta = \sqrt{\omega^2 \mu\varepsilon - \left(\dfrac{m\pi}{a}\right)^2 - \left(\dfrac{n\pi}{b}\right)^2} = \sqrt{\omega^2 \mu\varepsilon - \left[\left(\dfrac{m\pi}{a}\right)^2 + \left(\dfrac{n\pi}{b}\right)^2\right]}$

Tamilnadu College Of Engineering

$$= \sqrt{\omega^2\mu\varepsilon - \omega_c^2\mu\varepsilon}$$

$$= \omega\sqrt{\mu\varepsilon}\sqrt{1-\frac{\omega_c^2}{\omega^2}}$$

$$\beta = \omega\sqrt{\mu\varepsilon}\sqrt{1-\frac{f_c^2}{f^2}}$$

Cut-off wavelength $\lambda_c = \dfrac{c}{f_c} = \dfrac{c \times 2\sqrt{\mu\varepsilon}}{\sqrt{\left(\dfrac{m}{a}\right)^2 + \left(\dfrac{n}{b}\right)^2}}$

$$= \frac{\dfrac{1}{\sqrt{\mu\varepsilon}} \times 2\sqrt{\mu\varepsilon}}{\sqrt{\left(\dfrac{m}{a}\right)^2 + \left(\dfrac{n}{b}\right)^2}}$$

$$\lambda_c = \frac{2}{\sqrt{\left(\dfrac{m}{a}\right)^2 + \left(\dfrac{n}{b}\right)^2}}$$

Guide wavelength $\lambda_g = \dfrac{2\pi}{\beta}$

$$= \frac{2\pi}{\omega\sqrt{\mu\varepsilon}\sqrt{1-\dfrac{f_c^2}{f^2}}}$$

$$= \frac{2\pi}{2\pi f\sqrt{\mu\varepsilon}\sqrt{1-\dfrac{f_c^2}{f^2}}}$$

$$= \frac{c}{f\sqrt{1-\dfrac{f_c^2}{f^2}}}$$

$$\lambda_g = \frac{\lambda_o}{\sqrt{1-\dfrac{f_c^2}{f^2}}}$$

Where $\lambda_o = \dfrac{c}{f}$ is free space wavelength

Tamilnadu College Of Engineering

Phase velocity $v_{ph} = \frac{\omega}{\beta}$

$$= \frac{\omega}{\omega\sqrt{\mu\varepsilon}\sqrt{1-\frac{f_c^2}{f^2}}}$$

$$v_{ph} = \frac{c}{\sqrt{1-\frac{f_c^2}{f^2}}}$$

Group velocity $v_g = \frac{c^2}{v_{ph}} = \frac{c^2}{c}\sqrt{1-\frac{f_c^2}{f^2}}$

$$v_g = c\sqrt{1-\frac{f_c^2}{f^2}}$$

Wave impedance or characteristic impedance

$$Z_{TE} = \frac{E_x}{H_y} = -\frac{E_y}{H_x} = \frac{\omega\mu}{\beta}$$

$$= \frac{\omega\mu}{\omega\sqrt{\mu\varepsilon}\sqrt{1-\frac{f_c^2}{f^2}}}$$

$$= \frac{\sqrt{\frac{\mu}{\varepsilon}}}{\sqrt{1-\frac{f_c^2}{f^2}}}$$

$$Z_{TE} = \frac{\eta}{\sqrt{1-\frac{f_c^2}{f^2}}}$$

Tamilnadu College Of Engineering

$$Z_{TM} = \frac{E_x}{H_y} = -\frac{E_y}{H_x} = \frac{\beta}{\omega\varepsilon}$$

$$= \frac{\omega\sqrt{\mu\varepsilon}\sqrt{1-\frac{f_c^2}{f^2}}}{\omega\varepsilon}$$

$$= \sqrt{\frac{\mu}{\varepsilon}}\sqrt{1-\frac{f_c^2}{f^2}}$$

$$Z_{TM} = \eta\sqrt{1-\frac{f_c^2}{f^2}}$$

5.6 BESSEL'S DIFFERENTIAL EQUATION AND BESSEL FUNCTION

In solving for the electromagnetic fields within the circular wave guides, a differential equation known as Bessel's equation is encountered. The solution of the Bessel's equation leads to Bessel function.

Bessel's differential equation involved in circular waveguide has the form

$$\frac{d^2P}{d\rho^2} + \frac{1}{\rho}\frac{dP}{d\rho} + \left(1-\frac{n^2}{\rho^2}\right)P = 0 \qquad ...(1)$$

Where n is an integer.

The solution of this Bessel's equation can be obtained by assuming a power series solution

$$P = a_o' + a_1\rho + a_2\rho^2 + ... \qquad ...(2)$$

For special case $n = 0$, the Bessel's equation becomes

$$\frac{d^2P}{d\rho^2} + \frac{1}{\rho}\frac{dP}{d\rho} + P = 0 \qquad ...(3)$$

Substituting equation (2) in eqation (3) and equating the sum of the coefficients of each power of ρ to zero.

$$P = C_1\left[1-\left(\frac{\rho}{2}\right)^2 + \frac{\left(\frac{1}{2}\rho\right)^4}{(2!)^2} - \frac{\left(\frac{1}{2}\rho\right)^6}{(3!)^2} + ...\right] \qquad ...(4)$$

Tamilnadu College Of Engineering

$$= C_1 \sum_{r=0}^{\infty} (-1)^r \frac{\left(\frac{1}{2}\rho\right)^{2r}}{(r!)^2} = J_o(\rho) \qquad ...(5)$$

The series is convergent for all values of ρ either real or complex. Equation (5) is called Bessel's function of first kind of order zero and is denoted by $J_0(\rho) = P_0$ for $n = 0$. The corresponding solution for $n = 1,2,3...$ are designated as $J_1(\rho)$, $J_2(\rho)$, $J_3(\rho)$... where 'n' denotes the order of Bessel's function. Figure 5.11 shows the Bessel function of first kind of different orders.

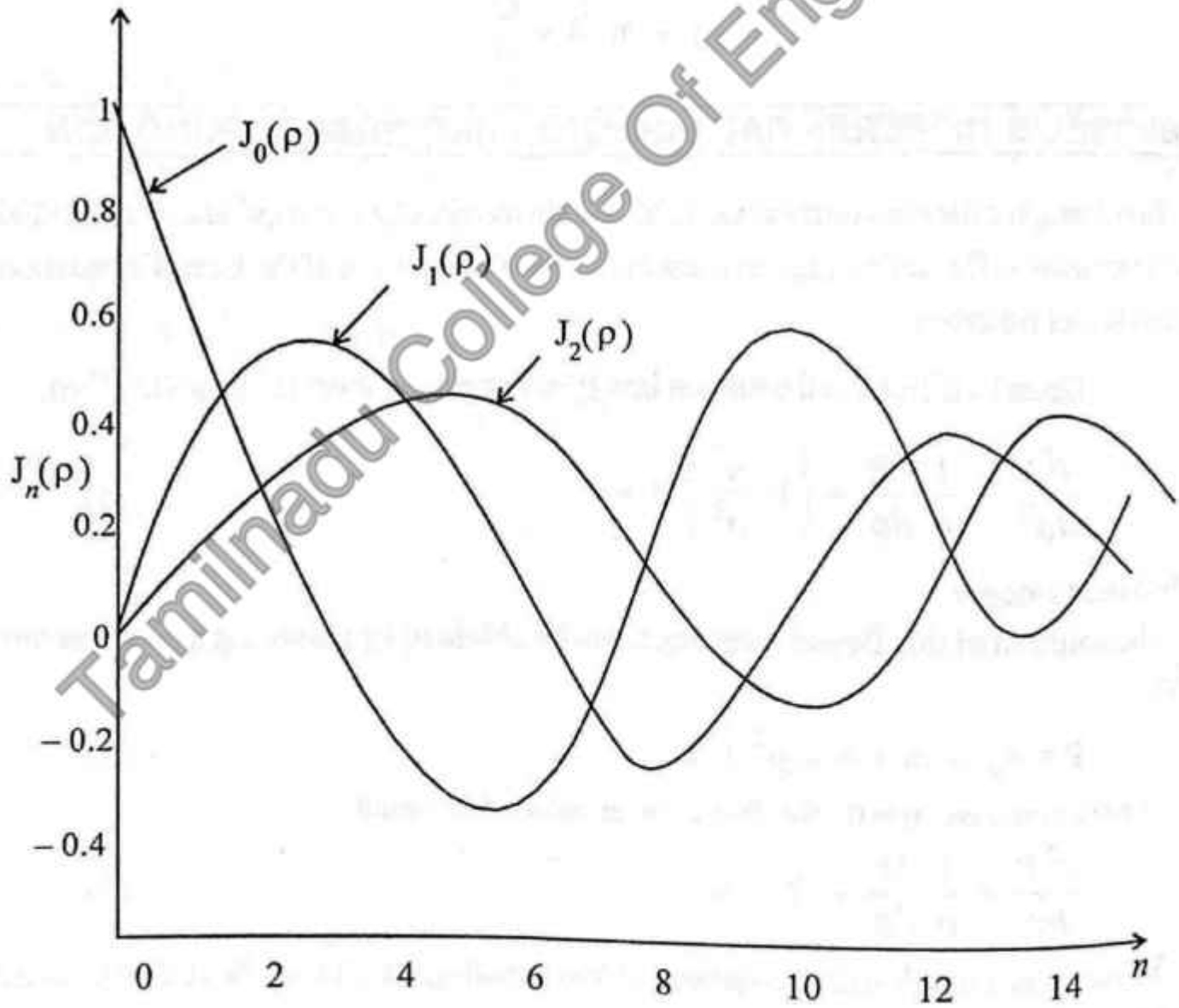

Figure 5.11 Bessel's function of first kind of different orders

Tamilnadu College Of Engineering

Since equation (3) is a second order differential equation, there must be two linearly independent solutions for each value of n. The second solution may be obtained in a similar manner that is used for first but starting with a slightly different series. This second solution is known as Bessel's function of second kind or Neumann's function denoted as $N_n(\rho)$, where 'n' indicates the order of function.

For the zero order of the second kind, the following series is obtained,

$$N_0(\rho) = \frac{2}{\pi}\left[ln\left(\frac{\rho}{2}\right) + \gamma\right] J_0(\rho) - \frac{2}{\pi}\sum_{r=1}^{\infty}(-1)^r \frac{\left(\frac{1\rho}{2}\right)^{2r}}{(r!)^2}\left[1+\frac{1}{2}+\frac{1}{3}+ \dots \frac{1}{r}\right]$$

The complete solution of equation (3) is given by

$$P = A\, J_0(\rho) + B\, N_0(\rho)$$

Figure 5.12 shows the zero order Bessel function of first and second kind.

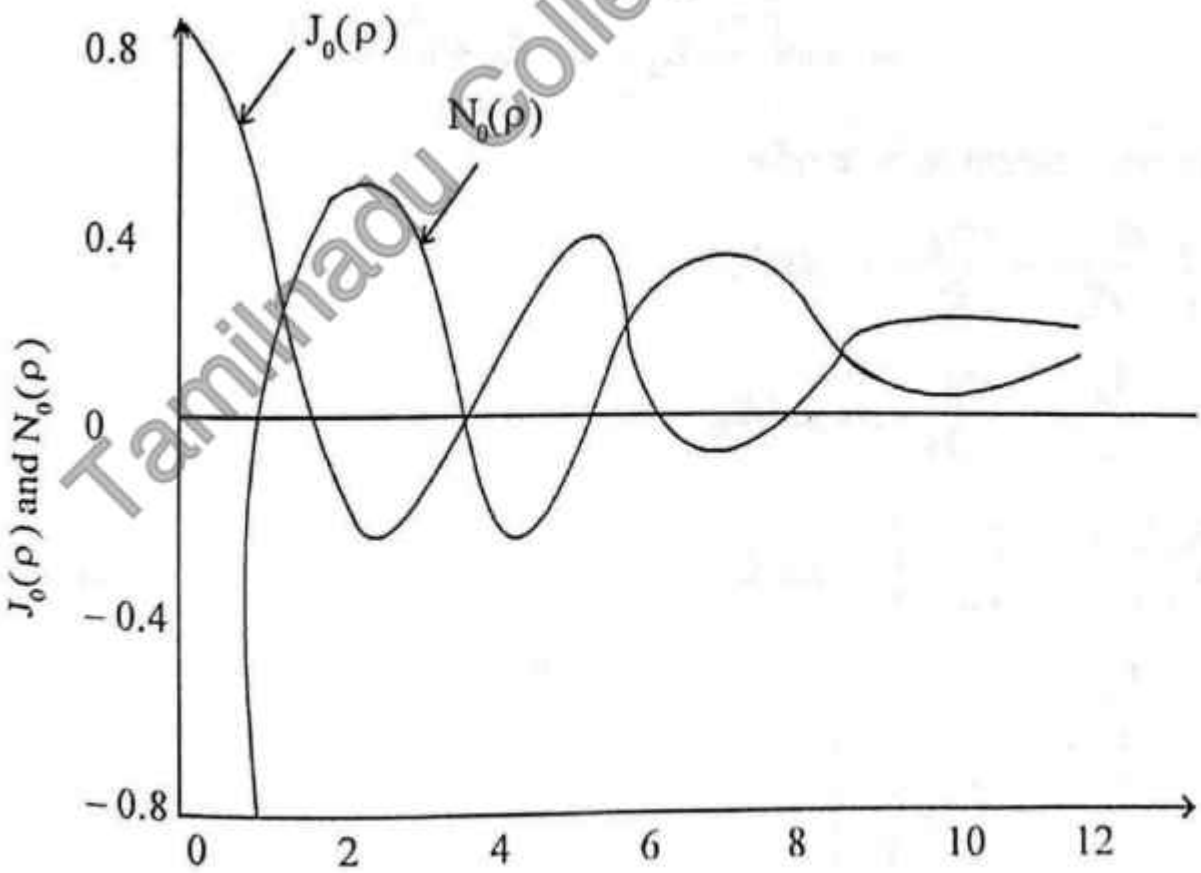

Figure 5.12 Zero order Bessel function of first and second kind

Tamilnadu College Of Engineering

5.7 CIRCULAR (OR) CYLINDRICAL WAVEGUIDE

In order to simplify the application of boundary conditions cylindrical co- ordinates are used.

Maxwell's equations is

$$\nabla \times H = j\omega\varepsilon E$$

$$\nabla \times H = \begin{vmatrix} \frac{\vec{a}_\rho}{\rho} & \vec{a}_\phi & \frac{\vec{a}_z}{\rho} \\ \frac{\partial}{\partial\rho} & \frac{\partial}{\partial\phi} & \frac{\partial}{\partial z} \\ H_\rho & \rho H_\phi & H_z \end{vmatrix} = j\omega\varepsilon E \quad ...(1)$$

$$\frac{\vec{a}_\rho}{\rho}\left[\frac{\partial H_z}{\partial\phi} - \frac{\partial(\rho H_\phi)}{\partial z}\right] - \vec{a}_\phi\left[\frac{\partial H_z}{\partial\rho} - \frac{\partial H_\rho}{\partial z}\right] + \frac{\vec{a}_z}{\rho}\left[\frac{\partial(\rho H_\phi)}{\partial\rho} - \frac{\partial H_\rho}{\partial\phi}\right]$$

$$= j\omega\varepsilon\left[\vec{a}_\rho E_\rho + \vec{a}_\phi E_\phi + \vec{a}_z \vec{E}_z\right]$$

Comparing the co efficient on both sides

$$\frac{1}{\rho}\frac{\partial H_z}{\partial\phi} - \frac{\partial H_\phi}{\partial z} = j\omega\varepsilon E_\rho \quad ...(2)$$

$$\frac{\partial H_\rho}{\partial z} - \frac{\partial H_z}{\partial\rho} = j\omega\varepsilon E_\phi \quad ...(3)$$

$$\frac{1}{\rho}\left[\frac{\partial(\rho H_\phi)}{\partial\rho} - \frac{\partial H_z}{\partial\phi}\right] = j\omega\varepsilon E_z \quad ...(4)$$

Similarly

$$\nabla \times E = \begin{vmatrix} \frac{\vec{a}_\rho}{\rho} & \vec{a}_\phi & \frac{\vec{a}_z}{\rho} \\ \frac{\partial}{\partial\rho} & \frac{\partial}{\partial\phi} & \frac{\partial}{\partial z} \\ E_\rho & \rho E_\phi & E_z \end{vmatrix} = -j\omega\mu\left[\vec{a}_\rho H_\rho + \vec{a}_\phi H_\phi + \vec{a}_z H_z\right] \quad ...(15)$$

Tamilnadu College Of Engineering

$$\frac{\vec{a}_\rho}{\rho}\left[\frac{\partial E_z}{\partial \phi} - \frac{\partial(\rho E_\phi)}{\partial z}\right] - \vec{a}_\phi\left[\frac{\partial E_z}{\partial \rho} - \frac{\partial E_\rho}{\partial z}\right] + \frac{\vec{a}_z}{\rho}\left[\frac{\partial(\rho E_\phi)}{\partial \rho} - \frac{\partial E_\rho}{\partial \phi}\right]$$

$$= -j\omega\mu\left[\vec{a}_\rho H_\rho + \vec{a}_\phi H_\phi + \vec{a}_z H_z\right]$$

Comparing the co efficient on both sides

$$\frac{1}{\rho}\frac{\partial E_z}{\partial \varphi} - \frac{\partial E_\varphi}{\partial z} = -j\omega\mu H_\rho \quad ...(6)$$

$$\frac{\partial E_\rho}{\partial z} - \frac{\partial E_z}{\partial \rho} = -j\omega\mu H_\phi \quad ...(7)$$

$$\frac{1}{\rho}\left[\frac{\partial}{\partial \rho}(\rho E_\phi) - \frac{\partial E_\rho}{\partial \phi}\right] = -j\omega\mu H_z \quad ...(8)$$

Let

$$H_\rho = H_\rho^\circ e^{-\gamma z}$$

$$\frac{\partial H_\rho}{\partial z} = H_\rho^\circ e^{-\gamma z}(-\gamma) = -\gamma H_\rho \quad ...(9)$$

$$III^{ly} \quad \frac{\partial H_\phi}{\partial z} = -\gamma H_\phi \quad ...(10)$$

$$\frac{\partial H_z}{\partial z} = -\gamma H_z \quad ...(11)$$

Let

$$E_\rho = E_\rho^\circ e^{-\gamma z}$$

$$\frac{\partial E_\rho}{\partial z} = E_\rho^\circ e^{-\gamma z}(-\gamma) = -\gamma E_\rho \quad ...(12)$$

$$\frac{\partial E_\phi}{\partial z} = -\gamma E_\phi \quad ...(13)$$

$$\frac{\partial E_z}{\partial z} = -\gamma E_z \quad ...(14)$$

Tamilnadu College Of Engineering

Substituting equations(12), (13) & (14) into equation (6) , (7) & (8)

$$\frac{1}{\rho}\frac{\partial E_z}{\partial \phi} + \gamma E_\phi = -\, j\omega\mu H_\rho \qquad ...(15)$$

$$\gamma E_\rho + \frac{\partial E_z}{\partial \rho} = j\omega\mu H_\phi \qquad ...(16)$$

$$\frac{1}{\rho}\left[\frac{\partial(\rho E_\phi)}{\partial \rho} - \frac{\partial E_\rho}{\partial \phi}\right] = -\, j\omega\mu H_z \qquad ...(17)$$

Substituting equations (9), (10) & (11) into equations (2), (3) & (4)

$$\frac{1}{\rho}\frac{\partial H_z}{\partial \phi} + \gamma H_\phi = j\omega\varepsilon E_\rho \qquad ...(18)$$

$$\gamma H_\rho + \frac{\partial H_z}{\partial \rho} = -\, j\omega\varepsilon E_\phi \qquad ...(19)$$

$$\frac{1}{\rho}\left[\frac{\partial}{\partial \rho}(\rho H_\phi) - \frac{\partial H_\rho}{\partial \phi}\right] = j\omega\varepsilon E_z \qquad ...(20)$$

From equation (16)

$$H_\phi = \frac{\gamma E_\rho}{j\omega\mu} + \frac{\partial E_z}{\partial \rho}\left(\frac{1}{j\omega\mu}\right) \qquad ...(21)$$

Substituting equation (21) in (18)

$$j\omega\varepsilon E_\rho = \frac{1}{\rho}\frac{\partial H_z}{\partial \phi} + \gamma\left[\frac{\gamma E_\rho}{j\omega\mu} + \frac{\partial E_z}{\partial_\rho} \times \frac{1}{j\omega\mu}\right]$$

$$= \frac{1}{\rho}\frac{\partial H_z}{\partial \phi} + \frac{\gamma^2 E_\rho}{j\omega\mu} + \frac{\gamma \partial E_z}{j\omega\mu\partial\rho}$$

$$\left(j\omega\varepsilon - \frac{\gamma^2}{j\omega\mu}\right)E_\rho = \frac{1}{\rho}\frac{\partial H_z}{\partial \phi} + \frac{\gamma}{j\omega\mu}\frac{\partial E_z}{\partial \rho}$$

$$-\left(\frac{\omega^2\mu\varepsilon + \gamma^2}{j\omega\mu}\right)E_\rho = \frac{1}{\rho}\frac{\partial H_z}{\partial \phi} + \frac{\gamma}{j\omega\mu}\frac{\partial E_z}{\partial \rho}$$

Tamilnadu College Of Engineering

$$\frac{-h^2 E_\rho}{j\omega\mu} = \frac{1}{\rho}\frac{\partial H_z}{\partial \phi} + \frac{\gamma}{j\omega\mu}\frac{\partial E_z}{\partial \rho}$$

$$E_\rho = -\frac{j\omega\mu}{\rho h^2}\frac{\partial H_z}{\partial \phi} - \frac{\gamma}{h^2}\frac{\partial E_z}{\partial \rho} \quad ...(22)$$

From equation (15)

$$H_\rho = \frac{-1}{\rho j\omega\mu}\frac{\partial E_z}{\partial \phi} - \frac{\gamma}{j\omega\mu}E_\phi$$

Substitute the above equation in equation (19)

$$-j\omega\varepsilon E_\phi = \gamma H_\rho + \frac{\partial H_z}{\partial \rho}$$

$$= \frac{-\gamma}{\rho j\omega\mu}\frac{\partial E_z}{\partial \phi} - \frac{\gamma^2 E_\phi}{j\omega\mu} + \frac{\partial H_z}{\partial \rho}$$

$$j\omega\varepsilon E_\phi = \frac{\gamma}{\rho j\omega\mu}\frac{\partial E_z}{\partial \phi} + \frac{\gamma^2 E_\phi}{j\omega\mu} - \frac{\partial H_z}{\partial \rho}$$

$$\frac{(\omega^2\mu\varepsilon - \gamma^2)}{j\omega\mu}E_\phi = \frac{\gamma}{\rho j\omega\mu}\frac{\partial E_z}{\partial \phi} - \frac{\partial H_z}{\partial \rho}$$

$$E_\phi = \frac{-\gamma}{\rho h^2}\frac{\partial E_z}{\partial \phi} + \frac{j\omega\mu}{h^2}\cdot\frac{\partial H_z}{\partial \rho} \quad ...(23)$$

Substitute equation (23) in equation (15)

$$-j\omega\mu H_\rho = \frac{1}{\rho}\frac{\partial E_z}{\partial \phi} + \gamma E_\phi$$

$$= \frac{1}{\rho}\frac{\partial E_z}{\partial \phi} + \gamma\left[\frac{-\gamma}{\rho h^2}\frac{\partial E_z}{\partial \phi} + \frac{j\omega\mu}{h^2}\frac{\partial H_z}{\partial \rho}\right]$$

$$= \frac{1}{\rho}\frac{\partial E_z}{\partial \phi} - \frac{\gamma^2}{\rho h^2}\frac{\partial E_z}{\partial \phi} + \frac{\gamma j\omega\mu}{h^2}\frac{\partial H_z}{\partial \rho}$$

$$H_\rho = \frac{-\gamma}{h^2}\frac{\partial H_z}{\partial \rho} - \frac{\partial E_z}{\rho d\phi\, j\omega\mu} + \frac{\gamma^2 \partial E_z}{\rho h^2 d\phi\, j\omega\mu}$$

Tamilnadu College Of Engineering

$$= \frac{-\gamma}{h^2}\frac{\partial H_z}{\partial \rho} + \frac{\partial E_z}{\partial \phi}\left[\frac{\gamma^2}{\rho h^2 j\omega\mu} - \frac{1}{\rho j\omega\mu}\right]$$

$$= \frac{-\gamma}{h^2}\frac{\partial H_z}{\partial \rho} + \frac{\partial E_z}{\partial \phi}\left[\frac{\gamma^2 - h^2}{\rho h^2 j\omega\mu}\right]$$

$$= \frac{\partial E_z}{\partial \phi}\left(\frac{-\omega^2\mu\varepsilon}{\rho h^2 j\omega\mu}\right) - \frac{\gamma}{h^2}\frac{\partial H_z}{\partial \rho}$$

$$= \frac{\partial E_z}{\partial \rho}\left(\frac{j\omega\varepsilon}{\rho h^2}\right) - \frac{\gamma}{h^2}\frac{\partial H_z}{\partial \rho} \quad ...(24)$$

Substitute the equation (22) in equation (16)

$$j\omega\mu H_\varphi = \gamma E_\rho + \frac{\partial E_z}{\partial \rho}$$

$$= \gamma\left[\frac{-j\omega\mu}{\rho h^2}\frac{\partial H_z}{\partial \phi} - \frac{\gamma}{h^2}\frac{\partial E_z}{\partial \rho}\right] + \frac{\partial E_z}{\partial \rho}$$

$$= \frac{-j\omega\mu\gamma}{\rho h^2}\frac{\partial H_z}{\partial \phi} - \frac{\gamma^2}{h^2}\frac{\partial E_z}{\partial \rho} + \frac{\partial E_z}{\partial \rho}$$

$$= \frac{-j\omega\mu\gamma}{\rho h^2}\frac{\partial H_z}{\partial \phi} + \frac{\partial E_z}{\partial \rho}\left[1 - \frac{\gamma^2}{h^2}\right]$$

$$= \frac{-j\omega\mu\gamma}{\rho h^2}\frac{\partial H_z}{\partial \phi} + \frac{\partial E_z}{\partial \rho}\left[\frac{h^2 - \gamma^2}{h^2}\right]$$

$$= \frac{-j\omega\mu\gamma}{\rho h^2}\frac{\partial H_z}{\partial \phi} + \frac{\partial E_z}{\partial \rho}\left[\frac{\omega^2\mu\varepsilon}{h^2}\right]$$

$$H_\phi = \frac{-\gamma}{\rho h^2}\frac{\partial H_z}{\partial \varphi} - \frac{j\omega\varepsilon}{h^2}\frac{\partial E_z}{\partial \rho} \quad ...(25)$$

The wave equation becomes

$$\nabla^2 E = -\omega^2\mu\varepsilon E$$

$$\nabla^2 E = \frac{1}{\rho}\frac{\partial}{\partial \rho}\left[\rho\frac{\partial E}{\partial \rho}\right] + \frac{1}{\rho^2}\frac{\partial^2 E}{\partial \phi^2} + \frac{\partial^2 E}{\partial z^2}$$

Tamilnadu College Of Engineering

Assume the wave propagation in z direction

$$\frac{\partial^2 E_z}{\partial \rho^2} + \frac{1}{\rho^2}\frac{\partial^2 E_z}{\partial \phi^2} + \frac{\partial^2 E_z}{\partial z^2} + \frac{1}{\rho}\frac{\partial E_z}{\partial \rho} = -\omega^2 \mu\varepsilon E_z$$

Let the general solution of this equation be

$$E_z = P(\rho)\, Q(\phi)\, e^{-\gamma z} = PQe^{-\gamma z} = E_z^{\circ} e^{-\gamma z}$$

Where $P(\rho)$ is a function of ρ alone

$Q(\phi)$ is a function of ϕ alone

Substituting E_z in the wave equation

$$Q\frac{\partial^2 P}{\partial \rho^2} + \frac{Q}{\rho}\frac{\partial P}{\partial \rho} + \frac{P}{\rho^2}\frac{\partial^2 Q}{\partial \phi^2} + PQ\gamma^2 + \omega^2 \mu\varepsilon PQ = 0$$

Divide by PQ

$$\frac{1}{P}\frac{\partial^2 P}{\partial \rho^2} + \frac{1}{P\rho}\frac{\partial P}{\partial \rho} + \frac{1}{Q\rho^2}\frac{\partial^2 Q}{\partial \phi^2} + h^2 = 0$$

Let $$\frac{\partial^2 Q}{\partial \phi^2} = -n^2 Q$$

$$\frac{\partial^2 Q}{\partial \phi^2} + n^2 Q = 0$$

The solution of this equation is given by

$$Q = A_n \cos n\phi + B_n \sin n\phi$$

$$\frac{1}{P}\frac{\partial^2 P}{\partial \rho^2} + \frac{1}{P\rho}\frac{\partial P}{\partial \rho} + \frac{1}{Q\rho^2} \times -n^2 Q + h^2 = 0$$

$$\frac{1}{P}\frac{\partial^2 P}{\partial \rho^2} + \frac{1}{P\rho}\frac{\partial P}{\partial \rho} + h^2 - \frac{n^2}{\rho^2} = 0$$

Multiply by P

$$\frac{\partial^2 P}{\partial \rho^2} + \frac{1}{\rho}\frac{\partial P}{\partial \rho} + \left(h^2 - \frac{n^2}{\rho^2}\right)P = 0$$

Tamilnadu College Of Engineering

Divide by h^2

$$\frac{\partial^2 P}{\partial(\rho h)^2} + \frac{1}{(\rho h)}\frac{\partial P}{\partial(\rho h)} + \left(1 - \frac{n^2}{(\rho h)^2}\right)P = 0$$

This is the standard from of Bessel's equation in terms of (ρh)

$$P(\rho h) = J_n(\rho h)$$

Where $J_n(\rho h)$ is the Bessel's function of first kind of order 'n'

$$E_z = J_n(\rho h)\,(A_n \cos n\phi + B_n \sin n\phi)\,e^{-\gamma z}$$

$$H_z = J_n(\rho h)\,(C_n \cos n\phi + D_n \sin n\phi)\,e^{-\gamma z}$$

We have two constants A_n and B_n .Eventhough both may exist in general by proper choice of excitation of waveguide we can make one of them to be zero. Hence making $B_n = 0$

$$E_z = J_n(\rho h)\,A_n \cos n\phi\; e^{-\gamma z}$$

$$H_z = J_n(\rho h)\,C_n \cos n\phi\; e^{-\gamma z}$$

5.7.1 TM (Transverse Magnetic) Waves in Circular Wave Guide

For TM waves $H_z = 0$

$$E_\rho = \frac{-j\omega\mu}{\rho h^2}\frac{\partial H_z}{\partial \phi} - \frac{\gamma}{h^2}\frac{\partial E_z}{\partial \rho}$$

Substituting $H_z = 0$

$$E_\rho = \frac{-\gamma}{h^2}\frac{\partial E_z}{\partial \rho}$$

$$= \frac{-\gamma}{h^2}\frac{\partial}{\partial \rho}\left[J_n(\rho h)\,A_n \cos n\phi\right]$$

$$= \frac{-\gamma}{h^2} J_n'(\rho h)\,A_n \cos n\phi\; h$$

$$= \frac{-\gamma}{h} J_n'(\rho h)\,A_n \cos n\phi$$

$$= \frac{-j\beta}{h} J_n'(\rho h)\,A_n \cos n\phi$$

Tamilnadu College Of Engineering

From equation (23)

$$E_\varphi = \frac{-\gamma}{\rho h^2}\frac{\partial E_z}{\partial \phi}$$

$$= \frac{-\gamma}{\rho h^2}\frac{\partial}{\partial \phi}\left[J_n(\rho h)\, A_n \cos n\phi\right]$$

$$= \frac{-\gamma}{\rho h^2} J_n(\rho h)\, A_n\, (-\sin n\phi) n$$

$$= \frac{\gamma n}{\rho h^2} A_n \sin n\phi\, J_n(\rho h)$$

$$= \frac{j\beta n}{\rho h^2} A_n \sin n\phi J_n(\rho h)$$

From equation (24)

$$H_\rho = \frac{\partial E_z}{\partial \phi}\left(\frac{j\omega\varepsilon}{\rho h^2}\right)$$

$$= \frac{j\omega\varepsilon}{\rho h^2}\frac{\partial}{\partial \phi}\left[J_n(\rho h)\, A_n \cos n\phi\right]$$

$$= \frac{j\omega\varepsilon}{\rho h^2} J_n(\rho h)\, A_n(-\sin n\phi) n$$

$$= \frac{-j\omega\varepsilon n A_n \sin n\phi J_n(\rho h)}{\rho h^2}$$

From equation (25)

$$H_\phi = \frac{-j\omega\varepsilon}{h^2}\frac{\partial E_z}{\partial \rho}$$

$$= \frac{-j\omega\varepsilon}{h^2}\frac{\partial}{\partial \rho}\left[J_n(\rho h)\, A_n \cos n\phi\right]$$

$$= \frac{-j\omega\varepsilon}{h^2} J'_n(\rho h)\, h A_n \cos n\phi$$

$$= \frac{-j\omega\varepsilon J_n'(\rho h) A_n \cos n\phi}{h}$$

Tamilnadu College Of Engineering

Let us now apply the boundary condition $E_{tan} = 0$ for E_z component replacing ρ by a where 'a' is radius of cylindrical waveguide.

$$J_n(ha) A_n \cos n\phi = 0$$

For E_z to vanish at $\rho = a$, we must have $J_n(ha) = 0$ for arbitary values of $\cos n\phi$. For any value of n, $J_n(ha)$ becomes zero for a number of value of ha.

These values of ha for which $J_n(ha)$ is zero give the roots of equation $J_n(ha)$ for different values of n and designated as q_{nm} (or) h_{nm}

Where n is order of Bessel function, m is roots of $J_n(ha)$

Table 5.1 Roots of $J_n(ha)$

n	m = 1	m = 2	m = 3
0	2.405 TM_{01}	5.52 TM_{02}	8.654 TM_{02}
1	3.832 TM_{11}	7.016 TM_{12}	10.174 TM_{13}

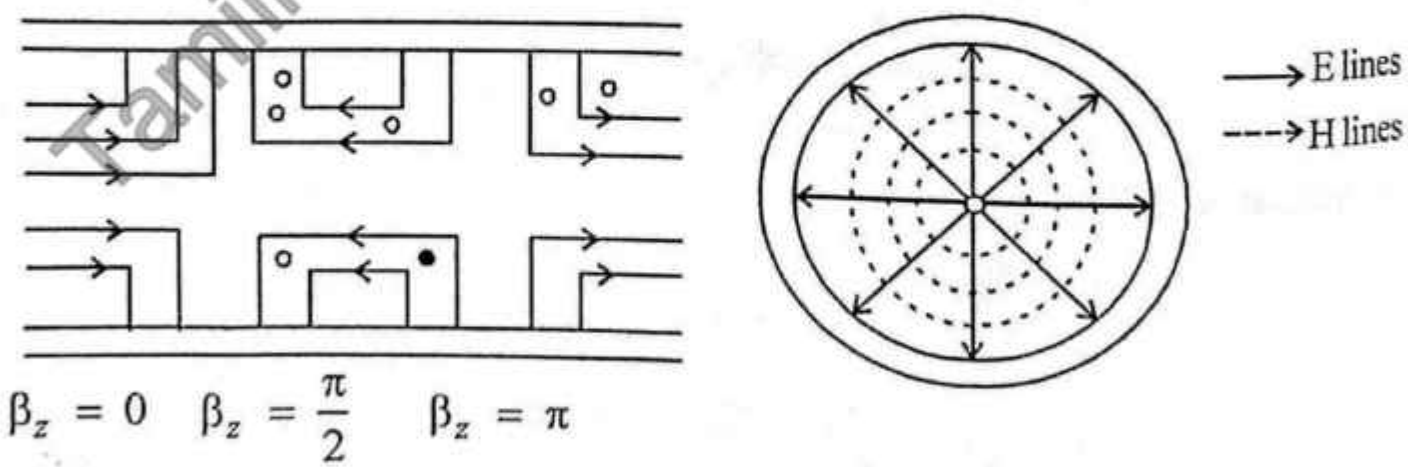

Figure 5.13 Field distribution for TM_{01} mode

Tamilnadu College Of Engineering

5.7.2 TE (Transverse Electric Waves) in Circular Waveguide

For TE waves $E_z = 0$

$$E_\rho = \frac{-j\omega\mu}{\rho h^2}\frac{\partial H_z}{\partial \phi} - \frac{\gamma}{h^2}\frac{\partial E_z}{\partial \rho}$$

Substituting $E_z = 0$

$$E_\rho = \frac{-j\omega\mu}{\rho h^2}\frac{\partial H_z}{\partial \phi}$$

$$= \frac{-j\omega\mu}{\rho h^2}\frac{\partial}{\partial \phi}[J_n(\rho h)C_n \cos n\phi]$$

$$= \frac{-j\omega\mu}{\rho h^2}[J_n(\rho h)C_n(-\sin n\phi)n]$$

$$= \frac{J_n(\rho h)\, n C_n \sin n\phi\, j\omega\mu}{\rho h^2}$$

From equation (23)

$$E_\phi = \frac{-\gamma}{\rho h_2}\frac{\partial E_z}{\partial \phi} + \frac{j\omega\mu}{h^2}\frac{\partial H_z}{\partial \rho}$$

Substituting $E_z = 0$

$$E_\phi = \frac{j\omega\mu}{h^2}\frac{\partial H_z}{\partial \rho}$$

$$= \frac{j\omega\mu}{h^2}\frac{\partial}{\partial \rho}[J_n(\rho h)C_n \cos n\phi]$$

$$= \frac{j\omega\mu}{h^2} J'_n(\rho h)\, h\, C_n \cos n\phi$$

$$= \frac{j\omega\mu\, J'_n(\rho h)C_n \cos n\phi}{h}$$

From equation (24)

$$H_\rho = \frac{\partial E_z}{\partial \phi}\left(\frac{j\omega\varepsilon}{\rho h^2}\right) - \frac{\gamma}{h^2}\frac{\partial H_z}{\partial \rho}$$

Tamilnadu College Of Engineering

Substituting $E_z = 0$

$$H_\rho = \frac{-\gamma}{h^2}\frac{\partial H_z}{\partial \rho}$$

$$= \frac{-\gamma}{h^2}\frac{\partial}{\partial \rho}(J_n(\rho h)\, c_n \cos n\phi)$$

$$= \frac{-\gamma}{h^2} J_n'(\rho h)\, h\, c_n \cos n\phi = \frac{-\gamma\, Jn'(\rho h) c_n \cos n\phi}{h}$$

From equation (25)

$$H_\phi = \frac{-\gamma}{\rho h^2}\frac{\partial H_z}{\partial \phi} - \frac{j\omega\varepsilon}{h^2}\frac{\partial E_z}{\partial \rho}$$

Substituting $E_z = 0$

$$H_\phi = \frac{-\gamma}{\rho h^2}\frac{\partial H_z}{\partial \phi}$$

$$= \frac{-\gamma}{\rho h^2}\frac{\partial}{\partial \phi}(J_n(\rho h)\, c_n \cos n\phi)$$

$$= \frac{-\gamma}{\rho h^2} J_n(\rho h)\, c_n(-\sin n\phi)n$$

$$= \frac{\gamma}{\rho h^2} J_n(\rho h) n c_n \sin n\phi$$

Let us apply boundary condition since H_z is not equal zero the boundary condition can not be applied on H_z since it does not vanish at the walls. Hence we will choose E_ϕ

$$E_\phi = 0 \; at \; \rho = a$$

$$J_n'(ha) = 0$$

Table 5.2 Roots of $J_n'(ha)$

n	m = 1	m = 2	m = 3
0	3·82 (TE_{01})	7·016 (TE_{02})	10·174 (TE_{03})
1	1·841 (TE_{11})	5·331 (TE_{12})	8·536 (TE_{13})

Tamilnadu College Of Engineering

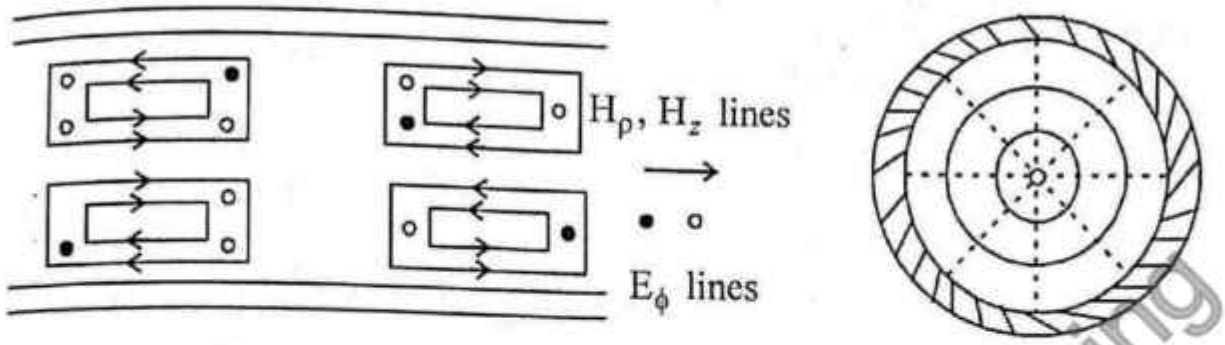

Figure 5.14 Field distribution for TE_{01} mode.

5.7.3 Characteristics of TE and TM Waves

We know that

$$h^2 = \gamma^2 + \omega^2 \mu\varepsilon \Rightarrow \gamma = \sqrt{h^2 - \omega^2 \mu\varepsilon}$$

For propagation $\gamma = j\beta$

$$j\beta = j\sqrt{\omega^2 \mu\varepsilon - h^2}$$

$$\beta = \sqrt{\omega^2 \mu\varepsilon - h_{nm}^2}$$

$$\omega_c^2 \mu\varepsilon = h_{nm}^2$$

$$4\pi^2 f_c^2 \mu\varepsilon = h_{nm}^2$$

$$f_c^2 = \frac{h_{nm}^2}{4\pi^2 \mu\varepsilon}$$

$$f_c = \frac{h_{nm}}{2\pi\sqrt{\mu\varepsilon}}$$

$$h_{nm} a = q_{nm}$$

$$h_{nm} = \frac{q_{nm}}{a} = \frac{(ha)_{nm}}{a}$$

$$f_c = \frac{(ha)_{nm}}{2\pi a\sqrt{\mu\varepsilon}}$$

$$f_c = \frac{c\,(ha)_{nm}}{2\pi a} \qquad \therefore c = \frac{1}{\sqrt{\mu\varepsilon}}$$

$$\lambda_c = \frac{c}{f_c} = \frac{2\pi a}{(ha)_{nm}}$$

Tamilnadu College Of Engineering

Phase velocity $v_{ph} = \frac{\omega}{\beta} = \frac{\omega}{\sqrt{\omega^2\mu\varepsilon - h_{nm}^2}} = \frac{\omega}{\sqrt{\omega^2\mu\varepsilon - \omega_c^2\mu\varepsilon}}$

$$= \frac{\omega}{\omega\sqrt{\mu\varepsilon}\sqrt{1 - \frac{\omega_c^2}{\omega^2}}}$$

$$v_{ph} = \frac{c}{\sqrt{1 - \frac{f_c^2}{f^2}}}$$

$$\lambda_g = \frac{2\pi}{\beta} = \frac{2\pi}{\sqrt{\omega^2\mu\varepsilon - \omega_c^2\mu\varepsilon}} = \frac{2\pi}{\omega\sqrt{\mu\varepsilon}\sqrt{1 - \frac{\omega_c^2}{\omega^2}}}$$

$$= \frac{2\pi}{2\pi f\sqrt{\mu\varepsilon}\sqrt{1 - \frac{f_c^2}{f^2}}}$$

$$\lambda_g = \frac{c}{f\sqrt{1 - \frac{f_c^2}{f^2}}}$$

$$\lambda_g = \frac{\lambda_o}{\sqrt{1 - \frac{f_c^2}{f^2}}}$$

where $\lambda_o = \frac{c}{f}$

Group velocity $v_g = \frac{c^2}{v_{ph}} = \frac{c^2}{c}\sqrt{1 - \frac{f_c^2}{f^2}}$

$$v_g = c\sqrt{1 - \frac{f_c^2}{f^2}}$$

Tamilnadu College Of Engineering

5.8 RESONANT CAVITIES

When one end of the waveguide is terminated in a shorting plate, there will be complete reflection of waves. When one more shorting plate is kept at a distance of multiple of $\frac{\lambda_g}{2}$ from first shorting plate, then hollow space so formed can now support a signal which bounches back and forth between the two shorting plates. The waves appear to be stationary and hence they are called standing waves.

Applications of cavity resonators.

- ✓ It is used in microwave amplifiers, filters
- ✓ It is used in cavity magnetron for generation of microwave signals.
- ✓ It is used in cavity wave meter for measurement of frequency of microwave signal.

5.8.1 Rectangular Cavity Resonators

Rectangular cavity resonators are formed by shorting two ends of section of a waveguide as shown in figure 5.15

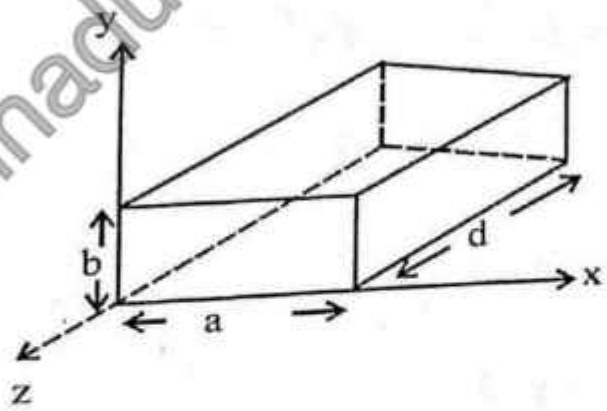

Figurer 5.15 Rectangular cavity resonator

The field components inside the cavity can be computed from the wave equations which satisfy the boundary condition of zero tangential electric field at all conducting walls. Because of metallic surface at boundary the field distribution posses standing wave pattern in all 3 directions.

Tamilnadu College Of Engineering

5.8.1.1 TE_{mnp} Mode

$$H_z = C \cos\left(\frac{m\pi}{a}\right)x \cos\left(\frac{n\pi}{b}\right)y \; e^{-j\beta z}$$

Considering incident and reflected wave for this component

$$H_z = (C_i \, e^{-j\beta z} + C_r \, e^{j\beta z}) \cos\left(\frac{m\pi}{a}\right)x \cos\left(\frac{n\pi}{b}\right)y$$

$$C_i + C_r = 0 \Rightarrow C_i = -C_r$$

$$H_z = C_i \cos\left(\frac{m\pi}{a}\right)x \cos\left(\frac{n\pi}{b}\right)y \, (e^{-j\beta z} - e^{j\beta z})$$

$$= -2jc_i \sin\beta z \cos\left(\frac{m\pi}{a}\right)x \cos\left(\frac{n\pi}{b}\right)y$$

$$= H_o \sin\beta z \cos\left(\frac{m\pi}{a}\right)x \cos\left(\frac{n\pi}{b}\right)y$$

Applying boundary condition $H_z = 0$ at $z = d$

$$\sin\beta d = 0$$

$$\beta d = \sin^{-1}(0) = P\pi$$

$$\beta = \frac{P\pi}{d} \quad \text{where } P = 1, 2...$$

$$H_z = H_o \sin\left(\frac{P\pi}{d}\right)z \cos\left(\frac{m\pi}{a}\right)x \cos\left(\frac{n\pi}{b}\right)y$$

$$H_y = \frac{-\gamma}{h^2}\frac{\partial H_z}{\partial y}$$

In the above equation γ occurs because of differentiation of $e^{-\gamma z}$ with respect to z. For a resonator this is to be replaced by trigonometric function.

$$H_y = \frac{1}{h^2}\frac{\partial^2 Hz}{\partial y \, \partial z}$$

$$= \frac{1}{h^2}\frac{\partial}{\partial y}\left[\frac{\partial Hz}{\partial z}\right]$$

Tamilnadu College Of Engineering

$$= \frac{1}{h^2}\frac{\partial}{\partial y}\left[H_z \cos\left(\frac{m\pi x}{a}\right)\cos\left(\frac{n\pi y}{b}\right)\cos\left(\frac{p\pi z}{d}\right)\left(\frac{p\pi}{d}\right)\right]$$

$$= \frac{-H_o}{h^2}\left(\frac{p\pi}{d}\right)\left(\frac{n\pi}{b}\right)\cos\left(\frac{m\pi x}{a}\right)\cos\left(\frac{p\pi z}{d}\right)\sin\left(\frac{n\pi y}{b}\right)$$

$$H_x = \frac{1}{h^2}\frac{\partial^2 H_z}{\partial x\,\partial z}$$

$$= \frac{1}{h^2}\frac{\partial}{\partial x}\left[\frac{\partial H_z}{\partial z}\right]$$

$$= \frac{1}{h^2}\frac{\partial}{\partial x}\left[H_o \cos\left(\frac{m\pi x}{a}\right)\cos\left(\frac{n\pi y}{b}\right)\cos\left(\frac{p\pi z}{d}\right)\left(\frac{p\pi}{d}\right)\right]$$

$$= -\frac{H_o}{h^2}\left(\frac{p\pi}{d}\right)\left(\frac{m\pi}{a}\right)\sin\left(\frac{m\pi x}{a}\right)\cos\left(\frac{n\pi y}{b}\right)\cos\left(\frac{p\pi z}{d}\right)$$

$$E_z = 0$$

$$E_y = \frac{j\omega\mu}{h^2}\frac{\partial H_z}{\partial x}$$

$$= -\frac{j\omega\mu}{h^2} H_o \sin\left(\frac{m\pi x}{a}\right)\left(\frac{m\pi}{a}\right)\cos\left(\frac{n\pi y}{b}\right)\sin\left(\frac{p\pi z}{d}\right)$$

$$E_x = -\frac{j\omega\mu}{h^2}\frac{\partial H_z}{\partial y}$$

$$= \frac{j\omega\mu H_o}{h^2}\left(\frac{n\pi}{b}\right)\cos\left(\frac{m\pi x}{a}\right)\sin\left(\frac{n\pi y}{b}\right)\sin\left(\frac{p\pi z}{d}\right)$$

5.8.1.2 TM $_{mnp}$ Mode

$$E_z = C \sin\left(\frac{m\pi x}{a}\right)\sin\left(\frac{n\pi y}{b}\right)e^{-j\beta z}$$

Considering incident and reflected wave for this component

$$E_z = (C_i\, e^{-j\beta z} + C_r\, e^{j\beta z})\sin\left(\frac{m\pi x}{a}\right)\sin\left(\frac{n\pi y}{b}\right)$$

Tamilnadu College Of Engineering

Assuming $C_i = C_r$

$$= 2C_i \cos \beta z \sin\left(\frac{m\pi x}{a}\right) \sin\left(\frac{n\pi y}{b}\right)$$

$$E_z = E_o \cos \beta z \sin\left(\frac{m\pi n}{a}\right) \sin\left(\frac{n\pi y}{b}\right)$$

$$E_y = \frac{1}{h^2} \frac{\partial^2 E_z}{\partial y \partial z}$$

$$= \frac{1}{h^2} \frac{\partial}{\partial y} \left[\frac{\partial E_z}{\partial z}\right]$$

$$= \frac{1}{h^2} \frac{\partial}{\partial x} \left[E_o (-\sin \beta z)\, \beta \sin\left(\frac{m\pi x}{a}\right) \sin\left(\frac{n\pi y}{b}\right)\right]$$

$$= \frac{1}{h^2} \left[-E_o \sin \beta z \cdot \beta \sin\left(\frac{m\pi x}{a}\right) \cos\left(\frac{n\pi y}{b}\right) \cdot \frac{n\pi}{b}\right]$$

Applying boundary condition

$E_y = 0$ at $z = d$

$\sin \beta d = 0$

$\beta d = \sin^{-1}(o) = p\pi$

$\beta = \frac{p\pi}{d}$ Where $p = 1, 2 \ldots.$

$$E_z = E_o \cos\left(\frac{p\pi z}{d}\right) \sin\left(\frac{m\pi x}{a}\right) \sin\left(\frac{n\pi y}{b}\right)$$

$$E_x = \frac{1}{h^2} \frac{\partial^2 E_z}{\partial x \partial z}$$

$$= \frac{1}{h^2} \frac{\partial}{\partial x} \left[\frac{\partial E_z}{\partial z}\right]$$

$$= \frac{1}{h^2} \frac{\partial}{\partial x} \left[-E_o \sin\left(\frac{m\pi x}{a}\right) \sin\left(\frac{n\pi y}{b}\right) \sin\left(\frac{p\pi z}{d}\right) \left(\frac{p\pi}{d}\right)\right]$$

Tamilnadu College of Engineering

$$= \frac{1}{h^2}\left[-E_o \cos\left(\frac{m\pi x}{a}\right)\left(\frac{m\pi}{a}\right)\left(\frac{p\pi}{d}\right)\sin\left(\frac{n\pi y}{b}\right)\sin\left(\frac{p\pi z}{d}\right)\right]$$

$H_z = 0$

$$H_y = \frac{-j\omega\varepsilon}{h^2}\frac{\partial E_z}{\partial x}$$

$$= \frac{-j\omega\varepsilon E_o}{h^2}\left(\frac{m\pi}{a}\right)\sin\left(\frac{m\pi x}{a}\right)\cos\left(\frac{n\pi y}{b}\right)\cos\left(\frac{p\pi z}{d}\right)$$

$$H_x = \frac{j\omega\varepsilon}{h^2}\frac{\partial E_z}{\partial y}$$

$$= \frac{j\omega\varepsilon}{h^2}E_o\left(\frac{n\pi}{b}\right)\sin\left(\frac{m\pi x}{a}\right)\cos\left(\frac{n\pi y}{b}\right)\cos\left(\frac{p\pi z}{d}\right)$$

For either TE_{mnp} (or) TM_{mnp} mode:

At resonance

$$\omega_r^2\,\mu\varepsilon = h^2$$

$$= \left(\frac{m\pi}{a}\right)^2 + \left(\frac{n\pi}{b}\right)^2 + \left(\frac{p\pi}{d}\right)^2$$

$$\omega_r = \frac{1}{\sqrt{\mu\varepsilon}}\sqrt{\left(\frac{m\pi}{a}\right)^2 + \left(\frac{n\pi}{b}\right)^2 + \left(\frac{p\pi}{d}\right)^2}$$

$$f_r = \frac{1}{2\pi\sqrt{\mu\varepsilon}}\sqrt{\left(\frac{m\pi}{a}\right)^2 + \left(\frac{n\pi}{b}\right)^2 + \left(\frac{p\pi}{d}\right)^2}$$

$$f_r = \frac{1}{2\sqrt{\mu\varepsilon}}\sqrt{\left(\frac{m}{a}\right)^2 + \left(\frac{n}{b}\right)^2 + \left(\frac{p}{d}\right)^2}$$

The dominant mode of rectangular cavity depends on dimension of cavity. For $b < a < d$ the dominant mode is TE_{101}

Tamilnadu College Of Engineering

5.8.2 Circular Cavity Resonators

It is a circular waveguide with two ends closed by a metal wall as shown in figure 5.16 Electromagnetic field analysis shows that due to ϕ symmetric structure of circular cavity field solution posses harmonic solution in ϕ and standing waves in radial and z directions.

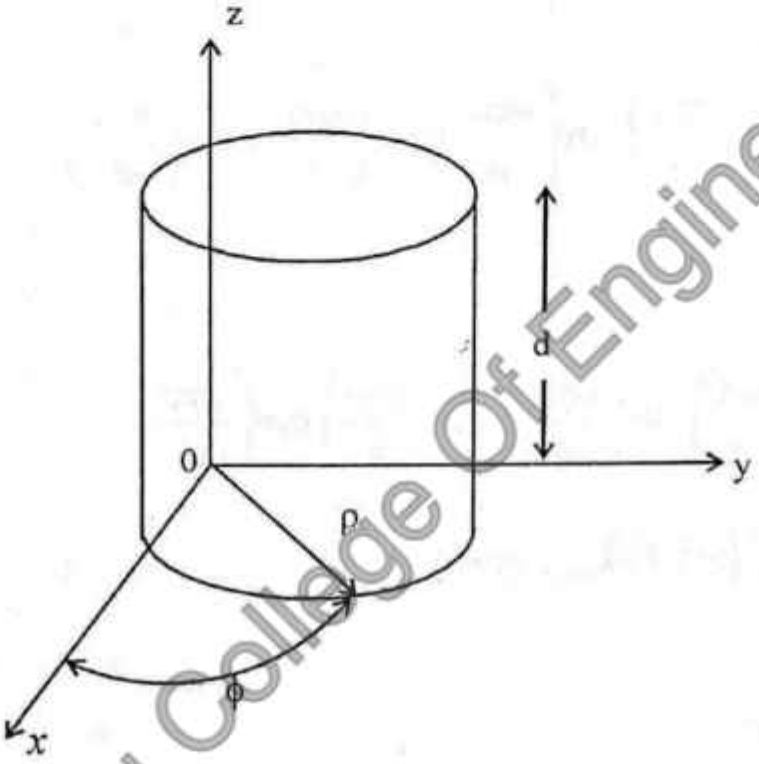

Figure 5.16 Circular cavity resonator

5.8.2.1 TE_{mnp} Mode

$$H_z = C_n J_n(\rho h)\cos n\phi$$

$$= (C_{in}\, e^{-j\beta z} + C_{nr}\, e^{j\beta z})\, J_n(\rho h)\cos n\phi$$

$$C_{in} = -C_{nr}$$

$$= C_{ni}\,[e^{-j\beta z} - e^{j\beta z}]J_n(\rho h)\cos n\phi$$

$$= -2jC_{ni}\sin\beta z\, J_n(\rho h)\cos n\phi$$

$$= H_o \sin\beta z\cos n\phi\, J_n(\rho h)$$

$$= H_o \sin\beta z\cos n\varphi\, J_n\left(\frac{\rho q'_{nm}}{a}\right)$$

Tamilnadu College Of Engineering

Applying boundary condition

$$H_z = 0 \; ; \; Z = d$$

$$\sin \beta d = 0$$

$$\beta d = \sin^{-1}(0) = p\pi$$

$$\beta = \frac{p\pi}{d}$$

$$H_z = H_o \sin\left(\frac{p\pi z}{d}\right) \cos n\phi \; J_n\left(\frac{\rho q'_{nm}}{a}\right)$$

$$H_\rho = \frac{-\gamma}{h^2}\frac{\partial H_z}{\partial \rho} = \frac{1}{h^2}\frac{\partial^2 H_z}{\partial \rho \, \partial z}$$

$$= \frac{1}{h^2}\frac{\partial}{\partial \rho}\left(\frac{\partial H_z}{\partial z}\right)$$

$$= \frac{1}{h^2}\frac{\partial}{\partial \rho}\left[H_o \cos\left(\frac{p\pi z}{d}\right)\left(\frac{p\pi}{d}\right)\cos n\phi \cdot J_n\left(\frac{\rho q'_{nm}}{a}\right)\right]$$

$$= \frac{1}{h^2}\left[H_o \cos\left(\frac{p\pi z}{d}\right)\left(\frac{p\pi}{d}\right)\cos n\phi \; J'_n\left(\frac{\rho q'_{nm}}{a}\right)\left(\frac{q'_{nm}}{a}\right)\right]$$

$$= H_o\left(\frac{p\pi}{d}\right)\left(\frac{a}{q'_{nm}}\right) J'_n\left(\frac{q'_{nm}\rho}{a}\right)\cos n\varphi \cos\left(\frac{p\pi z}{d}\right)$$

$$H_\phi = \frac{-\gamma}{\rho h^2}\frac{\partial H_z}{\partial \phi} = \frac{1}{\rho h^2}\frac{\partial^2 H_z}{\partial \phi \, \partial z}$$

$$= \frac{1}{\rho h^2}\frac{\partial}{\partial \phi}\left[\frac{\partial H_z}{\partial z}\right]$$

$$= \frac{1}{\rho h^2}\frac{\partial}{\partial \varphi}\left[H_o \cos\left(\frac{p\pi z}{d}\right)\left(\frac{p\pi}{d}\right)\cos n\phi \, J_n\left(\frac{\rho q'_{nm}}{a}\right)\right]$$

$$= \frac{-1}{\rho h^2}\left[H_o \cos\left(\frac{p\pi z}{d}\right)\left(\frac{p\pi}{d}\right)\sin n\varphi \cdot n J_n\left(\frac{\rho q'_{nm}}{a}\right)\right]$$

Tamilnadu College Of Engineering

$$= -H_o\left(\frac{p\pi}{d}\right)\frac{n}{\rho}\left(\frac{a}{q'_{nm}}\right)^2 J_n\left(\frac{\rho q'_{nm}}{a}\right)\sin n\phi\cos\left(\frac{p\pi z}{d}\right)$$

$$E_\rho = \frac{-j\omega\mu}{\rho h^2}\frac{\partial H_z}{\partial\phi}$$

$$= \frac{j\omega\mu}{\rho h^2}H_o\sin\left(\frac{p\pi z}{d}\right)\sin n\phi\cdot n J_n\left(\frac{\rho q'_{nm}}{a}\right)$$

$$= \frac{n j\omega\mu}{\rho h^2}\left(\frac{a}{q'_{nm}}\right)^2 H_o\sin\left(\frac{p\pi z}{d}\right)\sin n\phi\cdot J_n\left(\frac{\rho q'_{nm}}{a}\right)$$

Where

n = 0, 1... is the number of periodicity in ϕ

m = 1, 2... is the number of zeros of fields in ρ direction

p = 1, 2... . is the number of halfwaves in z direction.

$$E_\phi = \frac{j\omega\mu}{h^2}\frac{\partial H_z}{\partial\rho} = \frac{j\omega\mu}{h^2}H_o\sin\left(\frac{p\pi z}{d}\right)\cos n\phi\, J'_n\left(\frac{\rho q'_{nm}}{a}\right)\left(\frac{q'_{nm}}{a}\right)$$

$$= j\omega\mu\left(\frac{a}{q'_{nm}}\right)H_o\sin\left(\frac{p\pi z}{d}\right)\cos n\phi\, J'_n\left(\frac{\rho q'_{nm}}{a}\right)$$

$$E_z = 0$$

5.8.2.2 TM_{mnp} Mode

$$E_z = J_n(\rho h)A_n\cos n\phi\, e^{-j\beta z}$$

$$= (A_{ni}e^{-j\beta z} + A_{nr}e^{j\beta z})\, J_n(\rho h)\cos n\phi$$

$$A_{ni} = A_{nr}$$

$$= A_{ni}(e^{-j\beta z} + e^{j\beta z})J_n(\rho h)\cos n\phi$$

$$= 2A_{ni}\cos\beta z\, J_n(\rho h)\cos n\phi$$

$$E_z = E_o\cos\beta z\, J_n\left(\frac{\rho q_{nm}}{a}\right)\cos n\phi$$

Tamilnadu College Of Engineering

$E_\rho = 0$ at $z = d$

$$E_\rho = \frac{-\gamma}{h^2}\frac{\partial E_z}{\partial \rho} = \frac{1}{h^2}\frac{\partial^2 E_z}{\partial \rho \partial z} = \frac{1}{h^2}\frac{\partial}{\partial \rho}\left[\frac{\partial E}{\partial z}\right]$$

$$= \frac{1}{h^2}\frac{\partial}{\partial \rho}\left[E_o(-\sin\beta z)\beta\, J_n\left(\frac{\rho q_{nm}}{a}\right)\cos n\phi\right]$$

$$= \frac{-E_o}{h^2}\sin\beta z \cdot \beta J'_n\left(\frac{\rho q_{nm}}{a}\right)\left(\frac{q_{nm}}{a}\right)\cos n\phi$$

Applying boundary condition $E_\rho = 0$ at $z = d$

$$\sin\beta d = 0$$

$$\beta d = \sin^{-1}(0)$$

$$\beta d = p\pi$$

$$\beta = \frac{p\pi}{d} \qquad \text{Where P = 1, 2....}$$

$$E_z = E_o \cos\left(\frac{p\pi z}{d}\right) J_n\left(\frac{\rho q_{nm}}{a}\right)\cos n\phi$$

$$E_\phi = \frac{-\gamma}{\rho h^2}\frac{\partial E_z}{\partial \phi} = \frac{1}{\rho h^2}\frac{\partial^2 E_z}{\partial \phi \partial z}$$

$$= \frac{1}{\rho h^2}\frac{\partial}{\partial \phi}\left[\frac{\partial E_z}{\partial z}\right]$$

$$= \frac{1}{\rho h^2}\frac{\partial}{\partial \phi}\left[-E_o \sin\left(\frac{p\pi z}{d}\right)\left(\frac{p\pi}{d}\right)J_n\left(\frac{\rho q_{nm}}{a}\right)\cdot\cos n\phi\right]$$

$$= \frac{1}{\rho h^2} E_o \sin\left(\frac{p\pi z}{d}\right)\left(\frac{p\pi}{d}\right)J_n\left(\frac{\rho q_{nm}}{a}\right)\sin n\phi\, n$$

$$= \left(\frac{a}{q_{nm}}\right)^2\left(\frac{n}{\rho}\right)E_o\left(\frac{p\pi}{d}\right)J_n\left(\frac{\rho q_{nm}}{a}\right)\sin\left(\frac{p\pi z}{d}\right)$$

Tamilnadu College Of Engineering

$$E_\rho = \frac{-\gamma}{h^2}\frac{\partial E_z}{\partial \rho}$$

$$= \frac{1}{h^2}\frac{\partial^2 E_z}{\partial \rho\, \partial z}$$

$$= \frac{1}{h^2}\frac{\partial}{\partial \rho}\left[\frac{\partial E_z}{\partial z}\right]$$

$$= \frac{1}{h^2}\frac{\partial}{\partial \rho}\left[-E_o \sin\left(\frac{p\pi z}{d}\right)\left(\frac{p\pi}{d}\right) J_n\left(\frac{\rho q_{nm}}{a}\right)\cos n\phi\right]$$

$$= -\frac{1}{h^2} E_o \sin\left(\frac{p\pi z}{d}\right)\left(\frac{p\pi}{d}\right) J'_n\left(\frac{\rho q_{nm}}{a}\right)\left(\frac{q_{nm}}{a}\right)\cdot\cos n\phi$$

$$= -E_o \sin\left(\frac{p\pi z}{d}\right)\left(\frac{p\pi}{d}\right) J'_n\left(\frac{\rho q_{nm}}{a}\right)\left(\frac{a}{q_{nm}}\right)\cos n\phi$$

$$H_z = 0$$

$$H_\phi = \frac{-j\omega\varepsilon}{h^2}\frac{\partial E_z}{\partial \rho}$$

$$= \frac{-j\omega\varepsilon}{h^2} E_o \cos\left(\frac{p\pi z}{d}\right) J'_n\left(\frac{\rho q_{nm}}{a}\right)\cos n\phi\left(\frac{q_{nm}}{a}\right)$$

$$= -j\omega\varepsilon\, E_o \cos\left(\frac{p\pi z}{d}\right) J'_n\left(\frac{\rho q_{nm}}{a}\right)\cos n\phi\left(\frac{a}{q_{mm}}\right)$$

$$H_\rho = \frac{j\omega\varepsilon}{\rho h^2}\frac{\partial E_z}{\partial \varphi} = \frac{j\omega\varepsilon}{\rho h^2} E_o\, J_n\left(\frac{\rho q_{nm}}{a}\right)\cos\left(\frac{p\pi z}{d}\right)(-\sin n\phi).n$$

$$= \frac{-j\omega\varepsilon}{\rho}\left(\frac{a}{q_{nm}}\right)^2 E_o\, J_n\left(\frac{\rho q_{nm}}{a}\right)\cos\left(\frac{p\pi z}{d}\right)\sin n\phi\, n$$

For TE_{nmp}

At resonance $\omega_o^2\,\mu\varepsilon = h^2$

$$h^2 = \left(\frac{q'_{nm}}{a}\right)^2 + \left(\frac{p\pi}{d}\right)^2$$

Tamilnadu College Of Engineering

$$\omega_o^2 \mu\varepsilon = \left(\frac{q'_{nm}}{a}\right)^2 + \left(\frac{p\pi}{d}\right)^2$$

$$\omega_o = \frac{1}{\sqrt{\mu\varepsilon}} \sqrt{\left(\frac{q'_{nm}}{a}\right)^2 + \left(\frac{p\pi}{d}\right)^2}$$

$$f_o = \frac{1}{2\pi\sqrt{\mu\varepsilon}} \sqrt{\left(\frac{q'_{nm}}{a}\right)^2 + \left(\frac{p\pi}{d}\right)^2}$$

For TM_{mnp}

$$f_o = \frac{1}{2\pi\sqrt{\mu\varepsilon}} \sqrt{\left(\frac{q_{nm}}{a}\right)^2 + \left(\frac{p\pi}{d}\right)^2}$$

The dominant mode in circular cavity will depend on dimension of cavity

For $d < 2a$, TM_{010} mode is dominant mode

$d \geq 2a$, TE_{111} mode is dominant mode.

Example 1

A pair of perfectly conducting planes are separated by 8cm in air. For a frequency of 5000 MHz with the TM_1 mode excited find the following i) cut off frequency ii) Characteristic impedance iii) Attenuation constant for $f = 0.95f_c$ iv) phase constant v) Phasevelocity and group velocity vi) wavelength measured along the guided walls vii) Cut off wavelength viii) Angle of incidence.

Solution:

Given data,

$a = 8cm = 0.08m$, $f = 5000MHz$ TM_1 hence $m = 1$

i) Cut off frequancy $f_c = \frac{m}{2a}\frac{1}{\sqrt{\mu\varepsilon}} = \frac{1}{2 \times 0.08} \times \frac{1}{\sqrt{\mu_o \mu_r \varepsilon_o \varepsilon_r}}$

$$= \frac{1}{2 \times 0.08} \times \frac{1}{\sqrt{4\pi \times 10^{-7} \times 1 \times 8.854 \times 10^{-12} \times 1}}$$

$$f_c = 1.875 \text{ GHz}$$

Tamilnadu College Of Engineering

ii) Characteristic impedance $Z_{TM} = \eta\sqrt{1-\frac{fc^2}{f^2}} = \sqrt{\frac{\mu_o \mu_r}{\varepsilon_o \varepsilon_r}}\sqrt{1-\frac{fc^2}{f^2}}$

$$= \sqrt{\frac{4\pi \times 10^{-7} \times 1}{8.854 \times 10^{-12} \times 1}}\sqrt{1-\frac{(1.875 \times 10^9)^2}{(5000 \times 10^6)^2}}$$

$$Z_{TM} = 349 \cdot 41\Omega$$

iii) Attenuation constant for $f = 0 \cdot 95 f_c$

Propagation constant becomes attenuation constant if the operating frequency is less than cut off frequency ($\gamma = \alpha$)

$$\gamma = \alpha = \sqrt{\left(\frac{m\pi}{a}\right)^2 - \omega^2\mu\varepsilon} = \sqrt{\left(\frac{m\pi}{a}\right)^2 - 4\pi^2 f^2 \mu_o \mu_r \varepsilon_o \varepsilon_r}$$

$$= \sqrt{\left(\frac{1 \times \pi}{0 \cdot 08}\right)^2 - 4\pi^2 \times (5000 \times 10^6)^2 \times 4\pi \times 10^{-7} \times 1 \times 8.854 \times 10^{-12} \times 1}$$

$$\alpha = 12 \cdot 26 \text{ Neper}/m$$

iv) Phase constant $\beta = \sqrt{\omega^2\mu\varepsilon - \left(\frac{m\pi}{a}\right)^2}$

$$= \sqrt{4\pi^2 f^2 \mu_o \mu_r \varepsilon_o \varepsilon_r - \left(\frac{m\pi}{a}\right)^2}$$

$$= \sqrt{4 \times \pi^2 \times (5000 \times 10^6)^2 \times 4\pi \times 10^{-7} \times 1 \times 8.854 \times 10^{-12} \times 1 - \left(\frac{1 \times \pi}{0 \cdot 08}\right)^2}$$

$$\beta = 97 \cdot 08 \text{ Radian}$$

v) Phase velocity $v_{ph} = \frac{\omega}{\beta} = \frac{2\pi f}{\beta} = \frac{2 \times 3.14 \times 5000 \times 10^6}{97 \cdot 08}$

$$v_{ph} = 3 \cdot 236 \times 10^8 \, m/s$$

Group velocity $v_g = \frac{c^2}{v_{ph}} = \frac{(3 \times 10^8)^2}{3 \cdot 236 \times 10^8} = 2 \cdot 78 \times 10^8 \, m/s$

Tamilnadu College Of Engineering

vi) $$\lambda_g = \frac{2\pi}{\beta} = \frac{2 \times \pi}{97 \cdot 08} = 0.0647\,m$$

vii) $$\lambda_c = \frac{2a}{m} = \frac{2 \times 0.08}{1} = 0.16\,m$$

viii) Angle of incidence $$\tan\theta = \sqrt{\left(\frac{f}{f_c}\right)^2 - 1}$$

$$\theta = \tan^{-1}\sqrt{\left(\frac{5000 \times 10^6}{1.875 \times 10^9}\right)^2 - 1}$$

$$\theta = 67.97$$

Example 2

For a frequency of 6000 MHz and plane separation 7cm. Find the following for TE_1 mode. i) Cut off frequency ii) Angle of incidence on the planes iii) Phase velocity and group velocity. Is it possible to propagate TE_3 mode?

Solution:

Given Data,

m = 1, a = 7cm = 0.07m, f = 6000 MHz

i) Cut off frequency $$f_c = \frac{m}{2a} \times \frac{1}{\sqrt{\mu\varepsilon}}$$

$$= \frac{1}{2 \times 0.07} \times \frac{1}{\sqrt{4\pi \times 10^{-7} \times 1 \times 8.854 \times 10^{-12} \times 1}}$$

$$f_c = 2 \cdot 142\,\text{GHz}$$

Tamilnadu College Of Engineering

ii) Angle of incidence $\tan\theta = \sqrt{\left(\frac{f}{f_c}\right)^2 - 1}$

$$\theta = \tan^{-1}\sqrt{\left(\frac{6000\times10^6}{2.142\times10^9}\right)^2 - 1}$$

$$= \tan^{-1}\sqrt{6.846}$$

$$\theta = 69.08^\circ$$

iii) $$v_{ph} = \frac{v}{\sqrt{1-\frac{f_c^2}{f^2}}} = \frac{3\times10^8}{\sqrt{1-\frac{(2.142\times10^9)^2}{(6\times10^9)^2}}}$$

$$= 3.211\times10^8\ m/s$$

$$v_g = \frac{v^2}{v_{ph}} = \frac{(3\times10^8)^2}{3.211\times10^8} = 2.802\times10^8\ m/s$$

TE_3 mode ; m = 3

$$f_c = \frac{m}{2a}\times\frac{1}{\sqrt{\mu\varepsilon}} = \frac{3}{2\times0.07}\times\frac{1}{\sqrt{4\pi\times10^{-7}\times8.854\times10^{-12}\times1}}$$

$$= \frac{3}{2\times0.07}\times3\times10^8$$

$$f_c = 64\cdot2\times10^8 = 6\cdot42\times10^9\ \text{Hz}$$

$f_c > f$ (operating frequency). So propagation is not possible for TE_3 mode.

Example 3

Consider a parallel plate waveguide with plate separation 20cm with the TE_{10} mode excited at 1 GHz. Find the propagation constant, the cut off frequency and guide wavelength assuming $\varepsilon_r = 4$ for the medium of propagation in the guide.

Tamilnadu College Of Engineering

Solution:

Given data,

TE_{10} mode : m = 1, n = 0 a = 0.2m, f = 1GHz, $\varepsilon_r = 4$

Propagation constant

$$\gamma = \sqrt{\left(\frac{m\pi}{a}\right)^2 - \omega^2\mu\varepsilon}$$

$$= \sqrt{\left(\frac{1\times\pi}{0\cdot 2}\right)^2 - 4\pi^2 \times (1\times 10^9)^2 \times 4\pi\times 10^{-7}\times 1\times 8.854\times 10^{-12}\times 1}$$

$$= \sqrt{246\cdot 49 - 1754\cdot 31}$$

$$\gamma = j39.3 \text{ radian/m}$$

Cut off frequency $f_c = \frac{m}{2a}\frac{1}{\sqrt{\mu\varepsilon}} = \frac{1}{2\times 0.2}\times\frac{1}{\sqrt{4\pi\times 10^{-7}\times 1\times 8.854\times 10^{-12}\times 4}}$

$$= 375 \text{ MHz}$$

Guide wavelength $\lambda_g = \frac{\lambda_o}{\sqrt{1-\left(\frac{\lambda_o}{\lambda_c}\right)^2}}$

$$\lambda_c = \frac{2a}{m} = \frac{2\times 0.2}{1} = 0\cdot 4m$$

$$\lambda_o = \frac{c}{f} = \frac{3\times 10^8}{1\times 10^9} = 0\cdot 3m$$

$$\lambda_g = \frac{0.3}{\sqrt{1-\left(\frac{0.3}{0\cdot 4}\right)^2}} = 0\cdot 16m$$

Tamilnadu College Of Engineering

Example 4

A 4 GHz signal is propagated in a rectangular waveguide with internal dimension of 2.5 × 5cm. Assuming dominant mode. Calculate i) Cut - off wavelength ii) guide wavelength iii) group velocity iv) phase velocity and v) wave impedance.

☞ ***Solution:***

Given Data,

Dominant mode TE_{10} m = 1 ; n = 0, f = 4 GHz, a = 5cm = 0.05m, b = 2.5cm = 0.025m

i) Cut off wavelength $\lambda_c = \frac{2a}{m} = \frac{2 \times 0 \cdot 05}{1} = 0 \cdot 10\, m$

ii) Guide wavelength $\lambda_g = \frac{\lambda_o}{\sqrt{1 - \left(\frac{\lambda_o}{\lambda_c}\right)^2}}$

$$\lambda_o = \frac{c}{f} = \frac{3 \times 10^8}{4 \times 10^9} = 0 \cdot 075\, m$$

$$\lambda_g = \frac{0 \cdot 075}{\sqrt{1 - \left(\frac{0 \cdot 075}{0 \cdot 1}\right)^2}} = 0 \cdot 113\, m$$

iii) Group velocity $v_g = \left(\frac{\lambda_o}{\lambda_g}\right) \cdot c$

$$= \left(\frac{0 \cdot 075}{0 \cdot 113}\right) 3 \times 10^8$$

$$= 1 \cdot 984 \times 10^8 \text{ m/s}$$

iv) Phase velocity $= v_{ph} = \left(\frac{\lambda_g}{\lambda_o}\right) \cdot c$

$$= \left(\frac{0 \cdot 113}{0 \cdot 075}\right) 3 \times 10^8 = 4 \cdot 535 \times 10^8 \text{ m/s}$$

Tamilnadu College Of Engineering

v) Wave impedance $Z_{TE} = \dfrac{\eta}{\sqrt{1-\left(\dfrac{\lambda_o}{\lambda_c}\right)^2}}$

$$= \frac{120\pi}{\sqrt{1-\left(\dfrac{0\cdot075}{0\cdot1}\right)^2}}$$

$$Z_{TE} = 570\Omega$$

Example 5

A waveguide is formed by two parallel copper sheets $\sigma = 5\cdot8\times10^7$ S/m separated by 5cm thick lossly dielectic $\varepsilon_r = 2\cdot25$, $\mu_r = 1$. For an operating frequency of 10 GHz find $\beta, v_p, v_g, \lambda_g$ for TE_1 mode

Solution:

Given Data,

$f = 10$ GHZ, $\varepsilon_r = 2\cdot25$, $\mu_r = 1$, $a = 5\text{cm} = 0.05\text{m}$

$$\beta = \sqrt{\omega^2\mu\varepsilon - \left(\frac{m\pi}{a}\right)^2}$$

$$= \sqrt{4\pi^2 f^2 \mu_0 \mu_r \varepsilon_o \varepsilon_r - \left(\frac{1\times\pi}{0\cdot05}\right)^2}$$

$$= \sqrt{4\pi^2 (10\times10^9)^2\ 4\pi\times10^{-7}\times1\times8\cdot854\times10^{-12}\times2\cdot25 - 3943\cdot84}$$

$$= \sqrt{98680\cdot41 - 3943\cdot84}$$

$$\beta = 308 \text{ rad/m}$$

Phasee velocity $v_{ph} = \dfrac{\omega}{\beta} = \dfrac{2\pi f}{308} = \dfrac{2\times3\cdot14\times10\times10^9}{308}$

$$v_{ph} = 2\cdot03\times10^8 \text{ m/s}$$

Tamilnadu College of Engineering

Group velocity $v_g = \dfrac{c^2}{v_{pg}}$

$$c = \frac{1}{\sqrt{\mu_o \mu_r \varepsilon_o \varepsilon_r}} = \frac{1}{\sqrt{4\pi \times 10^{-7} \times 1 \times 8\cdot854 \times 10^{-12} \times 2\cdot25}} = \frac{1}{\sqrt{2\cdot50 \times 10^{-17}}}$$

$$= 2 \times 10^8$$

$$v_g = \frac{(2 \times 10^8)^2}{2\cdot03 \times 10^8} = 1\cdot97 \times 10^8 \text{ m/s}$$

$$\lambda_g = \frac{2\pi}{\beta} = \frac{2 \times 3.14}{308} = 0.0203\,m \text{ or } 2.04\,cm$$

Example 6

A rectangular waveguide has cross section dimension a = 7cm and b = 4cm. Determine all modes which will propagate through the waveguide at a frequncy of 6 GHz.

☞ ***Solution:***

Given Data,

$a = 7\text{cm} = 7 \times 10^{-2}\text{ m}$, $b = 4\text{cm} = 4 \times 10^{-2}\text{ m}$, $f = 6\text{GHz} = 6 \times 10^9\text{ Hz}$

$$\lambda_o = \frac{c}{f} = \frac{3 \times 10^8}{6 \times 10^9} = 5cm = 0.05\,m$$

The cut off wavelength

$$\lambda_c = \frac{2}{\sqrt{\left(\frac{m}{a}\right)^2 + \left(\frac{n}{b}\right)^2}}$$

For TE_{10} mode

$m = 1$; $n = 0$

$$\lambda_c = \frac{2}{\sqrt{\left(\frac{1}{7 \times 10^{-2}}\right)^2}} = 14\,cm$$

Tamilnadu College Of Engineering

If $\lambda_c > \lambda_o$ then propagation takes place. So propagation is possible for TE_{10} mode.

For TE_{01} mode

$m = 0 ; n = 1$

$$\lambda_c = 2b = 2 \times 4 = 8cm$$

$\lambda_c > \lambda_o$, propagation is possible for TE_{01} mode.

For TE_{11} mode

$m = 1 ; n = 1$

$$\lambda_c = \frac{2}{\sqrt{\left(\frac{1}{7 \times 10^{-2}}\right)^2 + \left(\frac{1}{4 \times 10^{-2}}\right)^2}}$$

$$= 6.94\text{cm}$$

$\lambda_c > \lambda_o$, propagation is possible for TE_{11} mode.

For TE_{02} mode

$m = 0 ; n = 2$

$$\lambda_c = \frac{2}{\sqrt{\left(\frac{2}{b}\right)^2}} = b = 4cm$$

$\lambda_c < \lambda_o$ propagation is not possible for TE_{02} mode.

Example 7

An air filled rectangular waveguide has cross sectional dimension of a = 8cm and b = 4cm. Find the cut - off frequencies for the following modes TE_{10}, TE_{20}, TE_{11}.

Solution:

Given data,

$a = 8 \text{ cm} = 8 \times 10^{-2}\text{m}$

$b = 4\text{cm} = 4 \times 10^{-2}\text{m}$

Cut-off frequency $f_c = \frac{c}{2}\sqrt{\left(\frac{m}{a}\right)^2 + \left(\frac{n}{b}\right)^2}$

Tamilnadu College Of Engineering

For TE_{10} : m = 1 ; n = 0

$$f_c = \frac{3\times10^8}{2}\sqrt{\left(\frac{1}{0.08}\right)^2 + 0} = 1.875\,\text{GHz}$$

For TE_{20} : m = 2 ; n = 0

$$f_c = \frac{3\times10^8}{2}\sqrt{\left(\frac{2}{0.08}\right)^2 + 0} = 3\cdot75\,\text{GHz}$$

For TE_{11} : m = 1 ; n = 1

$$f_c = \frac{3\times10^8}{2}\sqrt{\left(\frac{1}{0.08}\right)^2 + \left(\frac{1}{0.04}\right)^2} = 4\cdot19\,\text{GHz}$$

Example 8

A rectangular waveguide measures 3 × 5cm internally and has 10 GHz signal propagated in it. Calculate the cut-off wavelength, the guide wavelength and wave impedance for TE_{10} mode.

☞ ***Solution:***

Given Data,

$$f = 10\,\text{GHz} = 10\times10^9\,\text{Hz}$$

$$a = 5cm = 5\times10^{-2}\,m$$

$$b = 3cm = 3\times10^{-2}\,m$$

TE_{10} : m = 1 ; n = 0

Cut off wavelength $\lambda_c = \frac{2a}{m} = \frac{2\times5\times10^{-2}}{1} = 10\times10^{-2} = 0.1\,m$

Cut off frequency

$$f_c = \frac{c}{\lambda_c} = \frac{3\times10^8}{10\times10^{-2}} = 3\text{ GHz}$$

Tamilnadu College Of Engineering

Guide wavelength

$$\lambda_g = \frac{\lambda_o}{\sqrt{1-\left(\frac{f_c}{f}\right)^2}}$$

$$\lambda_o = \frac{c}{f} = \frac{3\times10^8}{10\times10^9} = 3cm = 3\times10^{-2}\ m$$

$$\lambda_g = \frac{3}{\sqrt{1-\frac{(3\times10^9)^2}{(10\times10^9)^2}}} = 3.145cm = 0.0314m$$

Wave impedance $Z_{TE} = \frac{\eta}{\sqrt{1-\frac{f_c^2}{f^2}}}$

$$= \frac{120\pi}{\sqrt{1-\left(\frac{3\times10^9}{10\times10^9}\right)^2}}$$

$$Z_{TE} = 395.19\ \Omega$$

Example 9

Design a rectangular waveguide with the following specification i) At 7.5 GHz, the guide wave length for TE_{10} mode is 90% of the cut off wavelength ii) TE_{30} and TE_{12} have the same cut off frequency

Solution:

Given Data,

$$f = 7\cdot5\ \text{GHz},\ \lambda_g = 0.9\,\lambda_c$$

$$\lambda_o = \frac{c}{f} = \frac{3\times10^8}{7\cdot5\times10^9} = 4cm = 4\times10^{-2}\ m$$

$$\lambda_g = \frac{\lambda_o}{\sqrt{1-\left(\frac{\lambda_o}{\lambda_c}\right)^2}}$$

$$\left(\frac{\lambda_g}{\lambda_o}\right)^2 = \frac{1}{1-\left(\frac{\lambda_o}{\lambda_c}\right)^2}$$

Tamilnadu College Of Engineering

Cross multiplying

$$\left(\frac{\lambda_g}{\lambda_o}\right)^2 - \left(\frac{\lambda_g}{\lambda_c}\right)^2 = 1$$

$$\left(\frac{\lambda_g}{\lambda_o}\right)^2 = 1 + \left(\frac{\lambda_g}{\lambda_c}\right)^2$$

$$= 1 + (0\cdot 9)^2 = 1.81$$

$$\lambda_g = \sqrt{1\cdot 81}\ \lambda_o = 1\cdot 35 \times 4$$

$$= 5\cdot 40\ cm$$

But

$$\frac{\lambda_g}{\lambda_c} = 0.9$$

$$\lambda_c = \frac{\lambda_g}{0.9} = \frac{5.4}{0.9} = 6\ cm$$

i) For TE_{10} : m=1; n=0

$$\lambda_c = \frac{2a}{m} = 2a$$

$$a = \frac{\lambda_c}{2} = \frac{6}{2} = 3cm$$

ii) For TE_{30} : m = 3; n=0

$$\lambda_c = \frac{2a}{m}$$

$$a = \frac{m\,\lambda_c}{2} = \frac{3\times 6}{2} = 9cm$$

For TE_{12} : m=1; n=2

$$\lambda_c = \frac{2}{\sqrt{\left(\frac{m}{a}\right)^2 + \left(\frac{n}{b}\right)^2}}$$

$$\left(\frac{m}{a}\right)^2 + \left(\frac{n}{b}\right)^2 = \frac{4}{\lambda_c^2}$$

Tamilnadu College Of Engineering

$$\left(\frac{2}{b}\right)^2 = \frac{4}{6^2} - \frac{1}{9^2}$$

$$= 0 \cdot 099$$

$$b^2 = \frac{4}{0 \cdot 099} = 40 \cdot 40$$

$$b = 6.35\ cm$$

Example 10

The large dimension of cross section of a rectangular waveguide is 2 cm. Find the cut off frequency and cut off wavelength for dominant TE mode.

Solution :

Given Data,

$$a = 2cm = 2 \times 10^{-2} m$$

Dominant atmode TE_{10} : m=1 ; n=0

$$f_c = \frac{c}{2} = \sqrt{\left(\frac{m}{a}\right)^2 + \left(\frac{n}{b}\right)^2}$$

$$= \frac{3 \times 10^8}{2} \sqrt{\left(\frac{1}{0.02}\right)^2 + 0}$$

$$= \frac{3 \times 10^8}{2} \times 50 = 75 \times 10^8 = 7 \cdot 5 GHz$$

Cut off wavelength $\lambda_c = \dfrac{2}{\sqrt{\left(\frac{m}{a}\right)^2 + \left(\frac{n}{b}\right)^2}}$

$$= \frac{2}{\sqrt{\left(\frac{m}{a}\right)^2 + 0}} = \frac{2a}{m}$$

$$\lambda_c = \frac{2 \times 0 \cdot 02}{1} = 0 \cdot 04\ m$$

Tamilnadu College Of Engineering

Example 11

Find the cut off wavelength in a standard rectangular waveguide for TE_{11} mode.

☞ ***Solution:***

Given Data,

The standard rectangular waveguide has dimension ratio of 2: 1. Let length be 'a' meters then breadth will be $b = \frac{a}{2}$

$$\lambda_c = \frac{2}{\sqrt{\left(\frac{m}{a}\right)^2 + \left(\frac{n}{b}\right)^2}} = \frac{2}{\sqrt{\left(\frac{m}{a}\right)^2 + \left(\frac{n}{\frac{a}{2}}\right)^2}}$$

$$= \frac{2}{\sqrt{\frac{m^2}{a^2} + \frac{4n^2}{a^2}}}$$

$$= \frac{2a}{\sqrt{m^2 + 4n^2}}$$

TE_{11} mode : m=1; n=1

$$\lambda_c = \frac{2a}{\sqrt{1+4}} = \frac{2a}{\sqrt{5}} = 0.894a \text{ (or) } = 0.894 \times 2b = 1.788b$$

Example 12

A pair of perfectly conducting plates are separated by 3cm in air and carries a 10 GHz signal in TM_1 mode. Find the cut off frequency, phase constant and cut off wavelength.

Tamilnadu College Of Engineering

Solution:

Given Data,

$$a = 3cm = 3 \times 10^{-2} \ m = 0 \cdot 03 \ m$$

$$f = 10 \text{ GHz}, \text{TM}_1 \text{ mode } m = 1$$

i) Cut off frequency $f_c = \dfrac{m}{2a} \times \dfrac{1}{\sqrt{\mu\varepsilon}} = \dfrac{3 \times 10^8 \times 1}{2 \times 0 \cdot 03} = 5\text{GHz}$

ii) Phase constant $\beta = \sqrt{\omega^2 \mu\varepsilon - \left(\dfrac{m\pi}{a}\right)^2}$

$$= \sqrt{4\pi^2 f^2 \mu_0 \mu_r \varepsilon_0 \varepsilon_r - \left(\frac{m\pi}{a}\right)^2}$$

$$= \sqrt{4 \times 3 \cdot 14 \times 3.14 \times \left(10 \times 10^9\right)^2 \times 4\pi \times 10^{-7} \times 1 \times 8 \cdot 854 \times 10^{-12} \times 1 - \left(\frac{3 \cdot 14}{0.03}\right)^2}$$

$$= 181 \cdot 3 \text{ rad/m}$$

iii) Cut - off wavelength $\lambda_c = \dfrac{2a}{m} = \dfrac{2 \times 0 \cdot 03}{1} = 0 \cdot 06 \ m$

Example 13

A parallel perfectly conducting planes are separated by 5cm in air and carries a signal with a frequency of 10GHz in TM_{10} mode. Find the cut off frequency and cut off wavelength.

Solution:

Given Data,

a = 5cm = 0.05m, f = 10 GHz

TM_{10} mode : m=1 ; n=0

Tamilnadu College Of Engineering

i) Cut off frequency $f_c = \frac{m}{2a} \cdot \frac{1}{\sqrt{\mu\varepsilon}}$

$$= \frac{1}{2 \times 0.05} \times 3 \times 10^8 = 3\,\text{GHz}$$

ii) Cut off wavelength $\lambda_c = \frac{2a}{m} = \frac{2 \times 0.05}{1} = 0{\cdot}1m$

Example 14

A TEM wave at 1 MHz propagates in the region between conducting planes which is filled with a dielectric material of $\mu_r = 1$ and $\varepsilon_r = 2$ .Find the phase constant and characteristic wave impedance

☞ ***Solution :***

Given Data,

$$f = 1\text{ MHz}, \mu_r = 1, \varepsilon_r = 2$$

i) Phase constant $\beta = \omega\sqrt{\mu\varepsilon}$

$$= 2\pi f\sqrt{\mu_o \mu_r \varepsilon_o \varepsilon_r}$$

$$= 2 \times 3.14 \times 1 \times 10^6 \sqrt{4\pi \times 10^{-7} \times 1 \times 8{\cdot}854 \times 10^{-12} \times 2}$$

$$\beta = 0.029 \text{ rad/m}$$

ii) Characteristic wave impedance $Z_{TEM} = \sqrt{\frac{\mu}{\varepsilon}}$

$$= \sqrt{\frac{\mu_o \mu_r}{\varepsilon_o \varepsilon_r}}$$

$$= \sqrt{\frac{4\pi \times 10^{-7} \times 1}{8{\cdot}854 \times 10^{-12} \times 2}}$$

$$Z_{TEM} = 266.32\Omega$$

Tamilnadu College Of Engineering

Example 15

A rectangular waveguide of cross section 5cm × 2cm is used to propagate TM_{11} mode at 10 GHz. Determine the cut off wavelength.

Solution:

Given Data,

$$a = 5cm = 5\times10^{-2}\ m = 0.05m$$

$$b = 2cm = 2\times10^{-2}\ m = 0.02m$$

$$f = 10\ \text{GHz} = 10\times10^{9}\ \text{Hz}$$

TM_{11} mode : $m=1$; $n=1$

$$\lambda_c = \frac{2}{\sqrt{\left(\frac{m}{a}\right)^2+\left(\frac{n}{b}\right)^2}} = \frac{2}{\sqrt{\left(\frac{1}{0.05}\right)^2+\left(\frac{1}{0.02}\right)^2}} = 0\cdot0371\ m$$

Example 16

A rectangular waveguide has the following dimensions a = 2.54 cm, b = 1.27cm. Calculate the cut off frequency for TE_{11} mode.

Solution:

Given Data,

$$a = 2\cdot54cm = 2\cdot54\times10^{-2}\ m = 0.0254m$$

$$b = 1.27cm = 1.27\times10^{-2}\ m = 0\cdot0127m$$

TE_{11} mode : $m = 1;\ n = 1$

$$\therefore f_c = \frac{1}{2\pi\sqrt{\mu\varepsilon}}\sqrt{\left(\frac{m\pi}{a}\right)^2+\left(\frac{n\pi}{b}\right)^2} = \frac{c}{2}\sqrt{\left(\frac{m}{a}\right)^2+\left(\frac{n}{b}\right)^2}$$

$$= \frac{3\times10^8}{2}\sqrt{\left(\frac{1}{0.0254}\right)^2+\left(\frac{1}{0.0127}\right)^2}$$

$$= \frac{3\times10^8}{2}\times88\cdot03 = 13\cdot205\ \text{GHz}$$

Tamilnadu College Of Engineering

Example 17

A rectangular waveguide with dimensions a = 8.5cm, b= 4.3cm is fed by 5GHz carrier. Will a TE_{11} mode propagate?

☞ ***Solution:***

Given Data,

$$a = 8\cdot5cm = 8\cdot5\times10^{-2}\ m = 0.085m$$

$$b = .4.3cm = 4\cdot3\times10^{-2}\ m = 0\cdot043m$$

$$f = 5\text{GHz}$$

TE_{11} mode: m=1 ; n=1

$$f_c = \frac{1}{2\pi\sqrt{\mu\varepsilon}}\sqrt{\left(\frac{m\pi}{a}\right)^2 + \left(\frac{n\pi}{b}\right)^2}$$

$$= \frac{c}{2}\sqrt{\left(\frac{m}{a}\right)^2 + \left(\frac{n}{b}\right)^2}$$

$$= \frac{3\times10^8}{2}\sqrt{\left(\frac{1}{0.085}\right)^2 + \left(\frac{1}{0.043}\right)^2}$$

$$f_c = 3.96\ \text{GHz}$$

As the cut off frequency of TE_{11} mode is less than operating frequency so TE_{11} mode will propagate.

Example 18

The cut off wavelength of a rectangular waveguide was measured to be 8cm and 4.8 cm when excited in TE_{10} and TE_{11} mode respectively. Determine the dimension of the waveguide.

Tamilnadu College Of Engineering

Solution:

Given Data,

$$\lambda_c = 8cm = 8 \times 10^{-2}\ m = 0.08m \ for\ \mathrm{TE}_{10}$$

$$\lambda_c = 4 \cdot 8cm = 4 \cdot 8 \times 10^{-2}\ m = 0.048\ m \ for\ \mathrm{TE}_{11}$$

For TE_{10} : m=1 ; n=0

$$\lambda_c = \frac{2}{\sqrt{\left(\frac{m}{a}\right)^2 + \left(\frac{n}{b}\right)^2}}$$

$$0 \cdot 08 = \frac{2}{\sqrt{\left(\frac{1}{a}\right)^2 + 0}} = 2a$$

$$a = \frac{0 \cdot 08}{2} = 0 \cdot 04\ m$$

For TE_{11} mode : m=1 ; n=1

$$\lambda_c = \frac{2}{\sqrt{\left(\frac{m}{a}\right)^2 + \left(\frac{n}{b}\right)^2}}$$

$$0.048 = \frac{2}{\sqrt{\left(\frac{1}{0.04}\right)^2 + \left(\frac{1}{b}\right)^2}}$$

$$0.048 = \frac{2}{\sqrt{625 + \frac{1}{b^2}}}$$

$$\sqrt{625 + \frac{1}{b^2}} = \frac{2}{0.048} = 41 \cdot 66$$

Tamilnadu College Of Engineering

Squaring on both sides

$$625 + \frac{1}{b^2} = 1735 \cdot 55$$

$$\frac{1}{b^2} = 1735 \cdot 55 - 625 = 1110 \cdot 55$$

$$b^2 = 9 \times 10^{-4}$$

$$b = 3 \times 10^{-2}\ m = 0 \cdot 03m$$

The dimensions are

$$a = 4cm = 0 \cdot 04\,m$$

$$b = 3cm = 0 \cdot 03\,m$$

Example 19

A rectangular waveguide measuring a = 4.5 cm and b = 3 cm internally has 9 GHz signal propagated in it. Calculate the guide wavelength, phase and group velocity, characteristic impedance for TM_{11} mode.

☞ ***Solution:***

Given Data,

$$a = 4 \cdot 5cm = 4 \cdot 5 \times 10^{-2} m = 0 \cdot 045m$$

$$b = 3cm = 3 \times 10^{-2} m = 0 \cdot 03m$$

$$f = 9\ \text{GHz} = 9 \times 10^9\ \text{Hz}$$

TM_{11} mode : m=1 ; n=1

i) Cut off frequency $f_c = \frac{1}{2\sqrt{\mu\varepsilon}} \sqrt{\left(\frac{m}{a}\right)^2 + \left(\frac{n}{b}\right)^2}$

$$= \frac{c}{2} \sqrt{\left(\frac{m}{a}\right)^2 + \left(\frac{n}{b}\right)^2}$$

Tamilnadu College Of Engineering

$$= \frac{3\times10^8}{2}\sqrt{\left(\frac{1}{0\cdot045}\right)^2 + \left(\frac{1}{0\cdot03}\right)^2}$$

$$= \frac{3\times10^8}{2} \times 40\cdot06$$

$$f_c = 6\cdot009 \text{ GHz}$$

ii) $$\beta = \sqrt{\omega^2\mu\varepsilon - \left(\frac{m\pi}{a}\right)^2 - \left(\frac{n\pi}{b}\right)^2}$$

$$= \sqrt{4\pi^2 f^2 \mu_0 \mu_r \varepsilon_0 \varepsilon_r - \left(\frac{m\pi}{a}\right)^2 - \left(\frac{n\pi}{b}\right)^2}$$

$$= \sqrt{4\times(3.14)^2\times\left(9\times10^9\right)^2\times4\pi\times10^{-7}\times 8\cdot854\times10^{-12}\times1 - \left(\frac{1\times3.14}{0\cdot045}\right)^2 - \left(\frac{1\times3\cdot14}{0\cdot03}\right)^2}$$

$$= \sqrt{35524\cdot94 - 4868\cdot93 - 1955\cdot11}$$

$$\beta = 140\cdot41 \text{ rad/m}$$

iii) Guide wavelength $$\lambda_g = \frac{2\pi}{\beta}$$

$$= \frac{2\times3\cdot14}{140\cdot41}$$

$$= 0\cdot044\,m$$

iv) Phase velocity $$v_{ph} = \frac{\omega}{\beta} = \frac{2\pi f}{\beta} = \frac{2\times3\cdot14\times9\times10^9}{140\cdot41}$$

$$v_{ph} = 4\cdot02\times10^8 \; m/s$$

v) Group velocity $$v_g = \frac{c^2}{v_{ph}} = \frac{\left(3\times10^8\right)^2}{4\cdot02\times10^8} = 2.23\times10^8 \; m/s$$

vi) $$Z_{TM} = \eta\sqrt{1-\frac{f_c^2}{f^2}} = 377\sqrt{1-\left(\frac{6\cdot009\times10^9}{9\times10^9}\right)^2}$$

$$= 377\times0\cdot744 = 280\cdot66\,\Omega$$

Tamilnadu College Of Engineering

Example 20

Find the cut - off frequency for rectangular waveguide with following inner dimensions. These operate in TE_{10} mode.

i) $7 \cdot 214 \times 3 \cdot 404$ cm (S– band)

ii) $2 \cdot 286 \times 1 \cdot 016$ cm (X – band)

☞ ***Solution :***

Given Data

$$a = 7 \cdot 214\ cm = 7 \cdot 214 \times 10^{-2}\ m$$

$$b = 3 \cdot 404 cm = 3 \cdot 404 \times 10^{-2}\ m$$

i) Cut off frequency $f_c = \frac{1}{2\sqrt{\mu\varepsilon}} \sqrt{\left(\frac{m}{a}\right)^2 + \left(\frac{n}{b}\right)^2}$

TE_{10} m=1 ; n=0

$$f_c = \frac{3 \times 10^8}{2} \sqrt{\left(\frac{1}{a}\right)^2 + 0}$$

$$= \frac{3 \times 10^8}{2 \times 7 \cdot 214 \times 10^{-2}}$$

$$= 2.\ 079 \text{ GHz}$$

ii) $a = 2 \cdot 286\ cm = 2 \cdot 286 \times 10^{-2}\ m$

$b = 1 \cdot 016\ cm = 1 \cdot 016 \times 10^{-2}\ m$

Cut off frequency $f_c = \frac{1}{2\sqrt{\mu\varepsilon}} \sqrt{\left(\frac{m}{a}\right)^2 + \left(\frac{n}{b}\right)^2}$

TE_{10} m=1 ; n=0

$$f_c = \frac{3 \times 10^8}{2} \sqrt{\left(\frac{1}{a}\right)^2 + 0}$$

$$= \frac{3 \times 10^8}{2 \times 2 \cdot 286 \times 10^{-2}} = 6 \cdot 561 \text{ GHz}$$

Tamilnadu College of Engineering

Example 21

A X-band waveguide with dimensions 2.286 × 1.016 cm has f_c = ***6.56 GHz for dominant mode. Find v_{ph} and v_g at 8 and 10 GHZ.***

Solution:

Given Data,

$$a = 2\cdot286 cm = 2\cdot286 \times 10^{-2} m$$

$$b = 1.016\ cm = 1\cdot016 \times 10^{-2} m$$

$$f_c = 6\cdot56\ \text{GHz}$$

i) $f = 8$ GHz

$$v_{ph} = \frac{v}{\sqrt{1-\frac{f_c^2}{f^2}}} = \frac{3\times10^8}{\sqrt{1-\left(\frac{6\cdot56\times10^9}{8\times10^9}\right)^2}} = \frac{3\times10^8}{0\cdot572}$$

$$v_{ph} = 5\cdot241\times10^8\ m/s$$

$$v_g = \frac{c^2}{v_{ph}}$$

$$= \frac{(3\times10^8)^2}{5\cdot241\times10^8}$$

$$v_g = 1\cdot717\times10^8\ m/s$$

$f = 10$ GHZ

$$v_{ph} = \frac{v}{\sqrt{1-\frac{f_c^2}{f^2}}} = \frac{3\times10^8}{\sqrt{1-\left(\frac{6\cdot56\times10^9}{10\times10^9}\right)^2}} = \frac{3\times10^8}{0\cdot755}$$

$$v_{ph} = 3\cdot973\times10^8\ m/s$$

$$v_g = \frac{c^2}{v_{ph}} = \frac{(3\times10^8)^2}{3\cdot973\times10^8}$$

$$v_g = 2\cdot265\times10^8\ m/s$$

Tamilnadu College of Engineering

Example 22

A circular waveguide has internal diameter of 4.5cm and is operated at 11GHz. For a TE_{01} mode calculate λ and cut off wavelength. $(ha)'_{01} = 2.405$

☞ ***Solution:***

Given data,

$$d = 4.5\text{cm},\ a = \frac{d}{2} = 2.25\text{cm},\ f = 11\text{GHz}$$

$$(ha)'_{01} = 2.405$$

i) $$\lambda = \frac{c}{f} = \frac{3\times10^8}{11\times10^9} = 0\cdot027m$$

ii) Cut off wavelength $$\lambda_c = \frac{2\pi}{h'_{nm}} = \frac{2\pi a}{(ha)'_{nm}}$$

$$= \frac{2\times3\cdot14\times2\cdot25\times10^{-2}}{2\cdot405}$$

$$\lambda_c = 0.058\ m$$

Example 23

A circular waveguide has an internal diameters of 6 cm. For a 9 GHz signal propagated in TE_{11} mode calculate the cut off frequency and characteristic impedance. $[(ha)'_{11} = 1\cdot84]$

☞ ***Solution:***

Given Data,

$$d = 6\text{cm};\ a = \frac{d}{2} = 3cm = 3\times10^{-2}m$$

$$f = 9\text{GHz} = 9\times10^9\ \text{Hz}$$

$$TE_{11}\ \text{mode}: (ha)'_{11} = 1\cdot84$$

Tamilnadu College Of Engineering

i) Cut - off frequency $f_c = \dfrac{h'_{nm}}{2\pi\sqrt{\mu\varepsilon}}$

$$= \frac{c}{2\pi} \frac{(ha)'_{nm}}{a}$$

$$= \frac{3 \times 10^8 \times 1\cdot84}{2 \times 3.14 \times 0\cdot03}$$

$$f_c = 2.92 \times 10^9 \text{ Hz} = 2.92 \text{ GHz}$$

ii) Characteristic impedance $Z_{TE} = \dfrac{\eta}{\sqrt{1-\dfrac{f_c^2}{f^2}}}$

$$= \frac{377}{\sqrt{1-\left(\dfrac{2\cdot92 \times 10^2}{9 \times 10^9}\right)^2}}$$

$$= \frac{377}{0.945} = 398.56\ \Omega$$

Example 24

Given a circular waveguide with f= 11 GHz in TE_{11} mode and internal diameter 4.5cm. Find i) λ_c ii) λ_g iii) v_g iv) v_{ph} v) Z_{TE}

Solution :

Given Data,

$f = 11$ GHz, $d = 4\cdot5$cm

$a = \dfrac{d}{2} = \dfrac{4.5\,cm}{2} = 2\cdot25\ cm$

TE_{11} mode : $(ha)'_{11} = 1.841$

Tamilnadu College Of Engineering

Cut off frequency $f_c = \dfrac{(ha)'_{nm}}{2\pi a\sqrt{\mu\varepsilon}}$

$$= \frac{3\times10^8 \times 1\cdot841}{2\times3\cdot14\times2\cdot25\times10^{-2}}$$

$$f_c = 3\cdot90\times10^9 \text{ Hz} = 3\cdot90 \text{ GHz}$$

i) $\lambda_c = \dfrac{c}{f_c} = \dfrac{3\times10^8}{3.90\times10^9} = 0.076\text{m}$

ii) $\lambda_g = \dfrac{\lambda_o}{\sqrt{1-\dfrac{f_c^2}{f^2}}}$

$$\lambda_o = \frac{c}{f} = \frac{3\times10^8}{11\times10^9} = 0\cdot027m$$

$$\lambda_g = \frac{0\cdot027}{\sqrt{1-\left(\dfrac{3\cdot90\times10^9}{11\times10^9}\right)^2}} = \frac{0\cdot027}{0\cdot935} = 0\cdot029m$$

iii) $v_{ph} = \dfrac{v}{\sqrt{1-\dfrac{f_c^2}{f^2}}} = \dfrac{3\times10^8}{\sqrt{1-\left(\dfrac{3\cdot90\times10^9}{11\times10^9}\right)^2}} = \dfrac{3\times10^8}{0\cdot935}$

$$= 3\cdot208\times10^8 \ m/s$$

iv) $v_g = \dfrac{v^2}{v_{ph}} = \dfrac{(3\times10^8)^2}{3\cdot208\times10^8} = 2\cdot80\times10^8 \ m/s$

v) $Z_{TE} = \dfrac{\eta}{\sqrt{1-\dfrac{f_c^2}{f^2}}} = \dfrac{377}{\sqrt{1-\left(\dfrac{3\cdot90\times10^9}{11\times10^9}\right)^2}} = \dfrac{377}{0\cdot935} = 403.21\Omega$

Tamilnadu College Of Engineering

Example 25

Calculate the cut off wavelength, guide wavelength and wave impedance of cylindrical waveguide with an internal diameter of 4 cm for a 10 GHz signal propagate in TE_{11} mode. $[(ha)'_{11} = 1.841]$

☞ ***Solution:***

Given Data,

$$d = 4cm \; ; \; a = \frac{d}{2} = 2cm = 0 \cdot 02m$$

$$f = 10 \text{ GHz} = 10 \times 10^9 \text{ Hz}$$

$$TE_{11} \text{ mode} : (ha)'_{11} = 1.841$$

i) Cut off wave length $\lambda_c = \dfrac{2\pi a}{(ha)'_{nm}}$

$$= \frac{2 \times 3 \cdot 14 \times 0 \cdot 02}{1.841}$$

$$\lambda_c = 0 \cdot 068 \; m$$

ii) Guide wavelength $\lambda_g = \dfrac{\lambda_o}{\sqrt{1-\left(\dfrac{\lambda_o}{\lambda_c}\right)^2}}$

$$\lambda_o = \frac{c}{f} = \frac{3 \times 10^8}{10 \times 10^9} = 0 \cdot 03 \, m$$

$$\lambda_g = \frac{0 \cdot 03}{\sqrt{1-\left(\dfrac{0 \cdot 03}{0 \cdot 068}\right)^2}} = 0 \cdot 033 \; m$$

iii) Wave impedance $Z_{TE} = \dfrac{\eta}{\sqrt{1-\left(\dfrac{\lambda_o}{\lambda_c}\right)^2}} = \dfrac{377}{\sqrt{1-\left(\dfrac{0 \cdot 03}{0 \cdot 068}\right)^2}}$

$$Z_{TE} = 420 \cdot 2 \; \Omega$$

Tamilnadu College Of Engineering

Example 26

A lossless air dielectric cylindrical waveguide of inside diameter 10mm, $f = 1.3\, f_c$. For TM_{01} mode find f_c, λ_g, Z_{TM}, v_{ph}, v_g

☞ ***Solution :***

Given Data,

$$d = 10\text{mm}, \quad a = \frac{d}{2} = 5\text{mm} = 5 \times 10^{-3}\, m$$

$$TM_{01} \text{ mode} : (ha)'_{01} = 2 \cdot 405$$

i) Cut off frequency $f_c = \dfrac{(ha)'_{nm}}{2\pi a\sqrt{\mu\varepsilon}} = \dfrac{3 \times 10^8 \times 2 \cdot 405}{2 \times 3 \cdot 14 \times 5 \times 10^{-3}}$

$$f_c = 22 \cdot 9\text{GHz}$$

$$f = 1.3\, f_c = 1.3 \times 22.9 \times 10^9 = 29.77 \text{ GHz}$$

ii) $$\lambda_g = \frac{\lambda_o}{\sqrt{1 - \dfrac{f_c^2}{f^2}}}$$

$$\lambda_o = \frac{c}{f} = \frac{3 \times 10^8}{29 \cdot 77 \times 10^9} = 0 \cdot 01m$$

$$\lambda_g = \frac{0 \cdot 01}{\sqrt{1 - \left(\dfrac{22 \cdot 9 \times 10^9}{29 \cdot 77 \times 10^9}\right)^2}} = \frac{0 \cdot 01}{0 \cdot 638} = 0 \cdot 016\, m$$

iii) $$Z_{TM} = \eta\sqrt{1 - \frac{f_c^2}{f^2}}$$

$$= 377\sqrt{1 - \left(\frac{22 \cdot 9 \times 10^9}{29 \cdot 77 \times 10^9}\right)^2}$$

$$= 377 \times 0 \cdot 638 = 240 \cdot 52\, \Omega$$

Tamilnadu College Of Engineering

iv) $$v_{ph} = \frac{v}{\sqrt{1-\frac{f_c^2}{f^2}}}$$

$$= \frac{3\times10^8}{\sqrt{1-\left(\frac{22\cdot9\times10^9}{29\cdot77\times10^9}\right)^2}} = \frac{3\times10^8}{0\cdot638} = 4\cdot70\times10^8 \ m/s$$

v) $$v_g = \frac{c^2}{v_{ph}} = \frac{(3\times10^8)^2}{4\cdot70\times10^8}$$

$$= 1\cdot91\times10^8 \ m/s$$

Example 27

Calculate λ_g, radius for an air filled cylindrical waveguide operating in TM_{11} mode, $f = 1.5 f_c$ where $f_c = 20$ GHz.

☞ ***Solution:***

Given Data,

$$f_c = 20 \text{ GHz}$$

$$f = 1\cdot5 f_c = 1\cdot5\times20\times10^9$$

$$f = 30 \text{ GHz}$$

$$TM_{11} \text{ mode}: (ha)'_{11} = 3.832$$

We know that

$$f_c = \frac{(ha)'_{nm}}{2\pi a\sqrt{\mu\varepsilon}}$$

$$20\times10^9 = \frac{3\times10^8\times3\cdot832}{2\times3\cdot14\times a}$$

Tamilnadu College Of Engineering

radius $a = \dfrac{3 \times 10^8 \times 3 \cdot 832}{2 \times 3 \cdot 14 \times 20 \times 10^9}$

$= 9.152 \times 19^{-3}\ m$

$= 0 \cdot 915\ cm$

$$\lambda_g = \frac{\lambda_o}{\sqrt{1 - \dfrac{f_c^2}{f^2}}}$$

$$\lambda_o = \frac{c}{f} = \frac{3 \times 10^8}{30 \times 10^9} = 0 \cdot 01$$

$$\lambda_g = \frac{0 \cdot 01}{\sqrt{1 - \left(\dfrac{20 \times 10^9}{30 \times 10^9}\right)^2}} = \frac{0 \cdot 01}{0 \cdot 745} = 0 \cdot 013\ m$$

$= 0 \cdot 013 m$

Example 28

A circular waveguide has a diameter of 5cm. Calculate cut off frequency for i) TE_{11} ii) TM_{01}

Solution:

Given Data,

$$d = 5\ cm, \quad a = \frac{d}{2} = 2 \cdot 5 cm = 2 \cdot 5 \times 10^{-2}\ m$$

i) TE_{11}

Cut off Frequency $f_c = \dfrac{(ha)'_{nm}}{2\pi a\sqrt{\mu\varepsilon}}$

$$= \frac{3 \times 10^8 \times 1 \cdot 841}{2 \times 3 \cdot 14 \times 2 \cdot 5 \times 10^{-2}}$$

$f_c = 3.517$ GHz

Tamilnadu College Of Engineering

ii) TM_{01}

$$\text{Cut off frequency } f_c = \frac{(ha)'_{nm}}{2\pi a\sqrt{\mu\varepsilon}}$$

$$= \frac{3\times10^8\times2\cdot405}{2\times3\cdot14\times2\cdot5\times10^{-2}}$$

$$f_c = 4\cdot595 \text{ GHz}$$

Example 29

Calculate the resonant frequency of an air filled rectangular resonator of dimensions a = 2cm, b=4 cm and d=6 cm operating in TE_{101} mode

☞ ***Solution :***

Given Data,

$$a = 2\ cm = 2\times10^{-2}\ m = 0\cdot02m$$

$$b = 4\ cm = 4\times10^{-2}\ m = 0\cdot04m$$

$$d = 6\ cm = 6\times10^{-2}\ m = 0\cdot06m$$

TE_{101} mode : m = 1 ; n = 0 ; p = 1

$$f_r = \frac{v}{2}\sqrt{\left(\frac{m}{a}\right)^2+\left(\frac{n}{b}\right)^2+\left(\frac{p}{d}\right)^2}$$

$$= \frac{3\times10^8}{2}\sqrt{\left(\frac{1}{0\cdot02}\right)^2+\left(\frac{0}{0\cdot04}\right)^2+\left(\frac{1}{0\cdot06}\right)^2}$$

$$f_r = 7\cdot905 \text{ GHz}$$

Example 30

A rectangular cavity resonator excited by TE_{101} mode at 20 GHz have the dimensions a = 2cm, b = 1cm. Calculate the length of cavity.

Tamilnadu College Of Engineering

☞ ***Solution :***

Given Data,

$f_r = 20\text{ GHz},\ a = 2\ cm = 2 \times 10^{-2}\ m = 0{\cdot}02m$

$b = 1\ cm = 1 \times 10^{-2}\ m = 0{\cdot}01m$

TE_{101} mode : m = 1 ; n = 0 ; p = 1

Resonant frequency $f_r = \frac{v}{2}\sqrt{\left(\frac{m}{a}\right)^2 + \left(\frac{n}{b}\right)^2 + \left(\frac{p}{d}\right)^2}$

$$\left(20 \times 10^9\right) = \frac{3 \times 10^8}{2}\sqrt{\left(\frac{1}{0{\cdot}02}\right)^2 + \left(\frac{0}{0{\cdot}01}\right)^2 + \left(\frac{1}{d}\right)^2}$$

$$= \frac{3 \times 10^8}{2}\sqrt{2500 + 0 + \frac{1}{d^2}}$$

$$\frac{2 \times 20 \times 10^9}{3 \times 10^8} = \sqrt{2500 + \frac{1}{d^2}}$$

$$133{\cdot}33 = \sqrt{2500 + \frac{1}{d^2}}$$

Squaring on both sides

$$17776{\cdot}88 - 2500 = \frac{1}{d^2}$$

$$\frac{1}{d^2} = 15276{\cdot}88 \Rightarrow d^2 = \frac{1}{15276{\cdot}88}$$

$$d^2 = 6{\cdot}545 \times 10^{-5}$$

$$d = 8.09 \times 10^{-3}\ m$$

Tamilnadu College Of Engineering

Example 31

Find resonant frequency of air filled cylindrical cavity for TE_{111} mode of radius 1 cm and length 2. 5 cm

Solution :

Given Data,

$$a = 1cm = 1 \times 10^{-2} m = 0 \cdot 01m$$

$$d = 2 \cdot 5cm = 2 \cdot 5 \times 10^{-2} m = 0 \cdot 025m$$

TE_{111} mode : m=1 ; n=1 ; p=1

$$f_r = \frac{1}{2\pi\sqrt{\mu\varepsilon}} \sqrt{\left(\frac{q_{nm}}{a}\right)^2 + \left(\frac{p\pi}{d}\right)^2}$$

$$= \frac{3 \times 10^8}{2 \times 3 \cdot 14} \sqrt{\left(\frac{1 \cdot 841}{0 \cdot 01}\right)^2 + \left(\frac{3 \cdot 14 \times 1}{0 \cdot 025}\right)^2}$$

$$= \frac{3 \times 10^8}{2 \times 3 \cdot 14} \sqrt{33892 \cdot 81 + 15775.36}$$

$$= \frac{3 \times 10^8 \times 222 \cdot 86}{2 \times 3 \cdot 14} = 10 \cdot 64 \text{ GHz}$$

Tamilnadu College Of Engineering

5 RF SYSTEM DESIGN CONCEPTS

5.1 ACTIVE RF COMPONENTS: SEMICONDUCTOR BASICS IN RF

5.1.1 Physical Properties of Semiconductors

The operation of semiconductor devices is dependent on physical behaviour of semiconductor themselves. Three most commonly used semiconductors are silicon (si), germanium (Ge) and gallium arsenide (GaAs). Figure 5.1(a) shows the bonding structure of pure silicon. Each silicon atom shares its four valance electrons with four neighboring atoms, forming four covalent bonds.

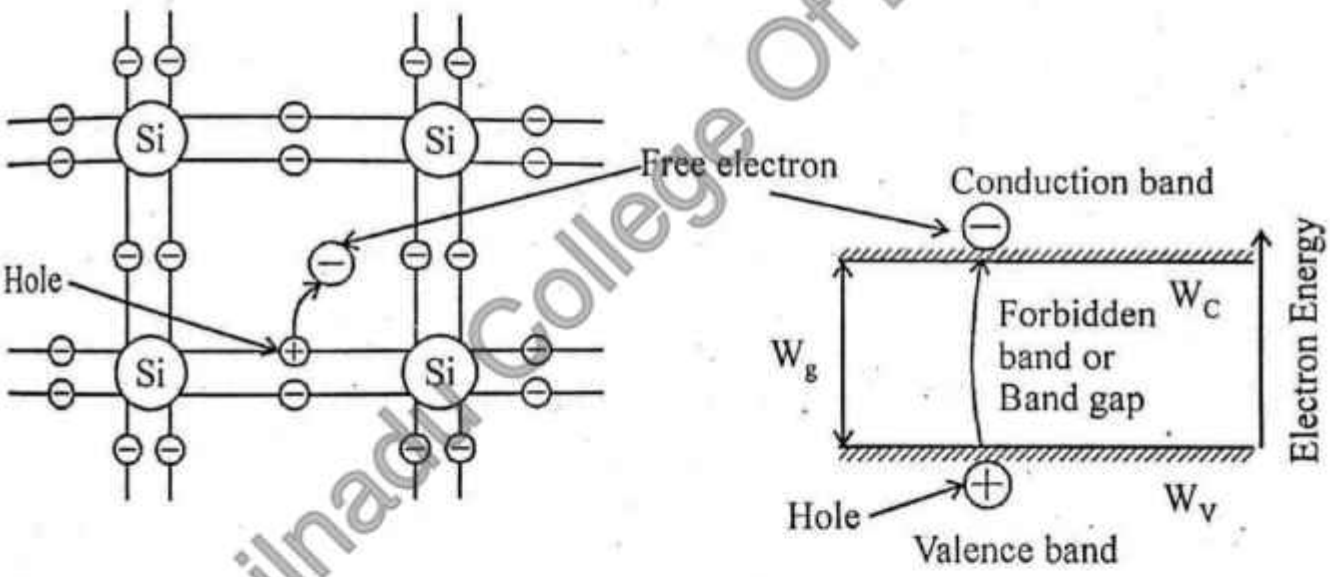

(a) Planar representation of covalent bonds (b) Energy band levels

Figure 5.1 Lattice structure and energy levels of silicon

In the absence of thermal energy i.e., when the temperature is equal to zero degree Kelvin ($T = 0K = -273.15°C$) all electrons are bonded to the corresponding atoms and semiconductor is not conductive. When the temperature increases, some of electrons obtain sufficient energy to break up the covalent bond and cross the energy gap $W_g = W_C - W_V$ as shown in figure 5.1(b). At room temperature $T = 300$ K, the band gap energy is equal to 1.12 eV for Si, 0.62 eV for Ge, 1.42 eV for GaAs. These free electrons form negative charge carriers that allow electric current conduction. The concentration of

Tamilnadu College Of Engineering

conduction electrons semiconductor is denoted as n. when electron breaks the covalent bond, it leaves behind a positively charged vacancy, which can be occupied by another free electron. These type of vacancies are called holes and their concentration is denoted by p. In thermal equilibrium, we have equal number of recombination and generation of holes and electrons.

The concentration obey the Fermi statistics according to

$$n = N_C e^{-\left(\frac{W_C - W_F}{KT}\right)} \quad \text{... (1)}$$

$$p = N_V e^{-\left(\frac{W_F - W_V}{KT}\right)} \quad \text{... (2)}$$

where

$$N_{C,V} = 2\left[\frac{2 m^*_{n,p} \pi KT}{h^2}\right]^{3/2} \quad \text{... (3)}$$

are the effective carrier concentration in conduction band (N_C) and valance band (N_V). W_C and W_V is energy levels associated with conduction and valance band W_F is Fermi energy level.

m^*_n and m^*_p refer to the effective mass of electrons and holes in the semiconductor.

K is Boltzmann's constant

h is Planck's constant

T is absolute temperature measured in Kevin

The electron and hole concentrations are described by concentration law

$$np = n_i^2 \quad \text{... (4)}$$

where n_i is the intrinsic concentration

Substitution of equation (1) and (2) in (4) results in the expression for intrinsic carrier concentration

$$n_i = \sqrt{N_C N_V}\, e^{-\left(\frac{W_C - W_V}{2KT}\right)} = \sqrt{N_C N_V}\, e^{-\left(\frac{W_g}{2KT}\right)} \quad \text{... (5)}$$

Classical electromagnetic theory specifies electrical conductivity in a material to be $\sigma = \frac{J}{E}$ where J is current density & E is applied electric field

Tamilnadu College Of Engineering

$$\sigma = \frac{q N V_d}{E} \quad \text{... (6)}$$

where N is carrier concentration
q is elementary charge
V_d is drift velocity
E is applied electric field

We can rewrite equation (6) as

$$\sigma = qn\mu_n + qp\mu_p \quad \text{... (7)}$$

where μ_n, μ_p are mobilities of electrons & holes

simplify the equation (7) using $n = p = n_i$

$$\sigma = qn_i(\mu_n + \mu_p)$$

$$= q\sqrt{N_C N_V}\, e^{-\left(\frac{W_g}{2KT}\right)}(\mu_n + \mu_p) \quad \text{... (8)}$$

Consider n-type semiconductor in which the electron concentration is related to the hole concentration as

$$n_n = N_D + p_n \quad \text{... (9)}$$

where N_D is the donor concentration

p_n is minority hole concentration

To find n_n and p_n solve equation (9) in conjunction with (4). The result is

$$n_n = \frac{N_D + \sqrt{N_D^2 + 4n_i^2}}{2} \quad \text{... (10)}$$

$$p_n = \frac{-N_D + \sqrt{N_D^2 + 4n_i^2}}{2} \quad \text{... (11)}$$

If the donor concentration N_D is much greater than the intrinsic electron concentration n_i then

$$n_n = N_D \quad \text{... (12)}$$

Tamilnadu College Of Engineering

$$p_n \simeq \frac{-N_D + N_D\left(1+\frac{2n_i^2}{N_D^2}\right)}{2} = \frac{n_i^2}{N_D} \quad \text{... (13)}$$

Consider p type semiconductor with

$$p_p = N_A + n_p \quad \text{... (14)}$$

where N_A, n_p are acceptor and minority electron concentrations. Solving equation (14) together with (4)

$$p_p = \frac{N_A + \sqrt{N_A^2 + 4n_i^2}}{2} \quad \text{... (15)}$$

$$n_p = \frac{-N_A + \sqrt{N_A^2 + 4n_i^2}}{2} \quad \text{... (16)}$$

5.1.2 The pn-Junction

The physical contact of a p-type with n-type semiconductor leads to one of the most important concepts when dealing with active semiconductor devices pn junction. Because of difference in the carrier concentration between two types of semiconductor, a current flow will be initiated across the interface. This current is known as diffusion current and is composed of electrons and holes. Consider one dimensional model of pn Junction as shown in Figure 5.2.

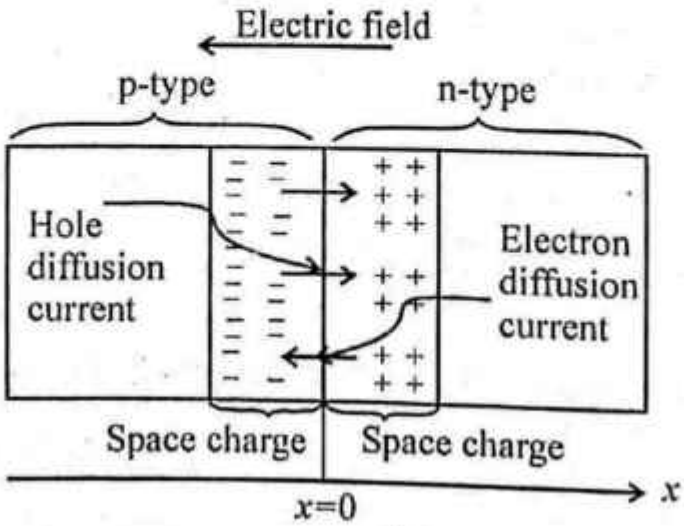

Figure 5.2 Current flows in the pn-Junction

Tamilnadu College Of Engineering

The diffusion current is composed of $I_{n\,diff}$ and $I_{p\,diff}$ components

$$I_{diff} = I_{n\,diff} + I_{p\,diff} = q\,A\left(D_n \frac{dn}{dx} + D_p \frac{dp}{dx}\right) \quad \text{... (1)}$$

where A is the semiconductor cross-sectional area orthogonal to the x-axis and D_n, D_p are diffusion constants for electrons and holes in the form

$$D_{n,p} = \mu_{n,p} \frac{KT}{q} = \mu_{n,p} V_T \quad \text{... (2)}$$

The thermal potential $V_T = \frac{KT}{q}$ is approximately 26 mV at room temperature of 300K.

Since p type semiconductor was initially neutral, the diffusion current of holes is going to leave behind a negative space charge. Similarly electron current flow from n semiconductor will leave behind positive space charges. As the diffusion current flow takes place an electric field E is crated between net positive charge in the n semiconductor and net negative charge in the p semiconductor. This field in turn induces a current $I_F = \sigma AE$ which opposes the diffusion current such that $I_F + I_{diff} = 0$.

Substituting equation (7) for the conductivity

$$I_F = q\,A\left(n\mu_n + p\mu_p\right)E = I_{nF} + I_{pF} \quad \text{... (3)}$$

since total current is equal to zero, the electron portion of the current is also equal to zero; that is

$$I_{n\,diff} + I_{nF} = q\,D_n\,A\frac{dn}{dx} + q_n\,\mu_n\,AE = q\,\mu_n\,A\left(V_T\frac{dn}{dx} - \frac{ndV}{dx}\right) = 0 \quad \text{... (4)}$$

where electric field E has been replaced by the derivative of the potential $E = \frac{-dV}{dx}$.

Integrating equation (4) we obtain the diffusion barrier voltage or built in potential

$$\int_0^{V_{diff}} dV = V_{diff} = V_T \int_{n_p}^{n_n} n^{-1}\,dn = V_T \ln\left[\frac{n_n}{n_p}\right] \quad \text{... (5)}$$

where n_n is electron concentration in n-type

n_p is electron concentration in p-type

Tamilnadu College Of Engineering

$$V_{diff} = V_T \ln\left[\frac{p_p}{p_n}\right] \quad \text{... (6)}$$

If the concentration of acceptor in the p-semiconductor is $N_A >> n_i$, and the concentration of donors in the n semiconductor is $N_D >> n_i$, then $n_n \simeq N_D$, $n_p = \frac{n_i^2}{N_A}$.

By using $n_p = \dfrac{-N_A + N_A\left(1+\dfrac{2n_i^2}{N_A^2}\right)}{2} = \dfrac{n_i^2}{N_A}$ and equation (5) we obtain

$$V_{diff} \simeq V_T \ln\left(\frac{N_A N_D}{n_i^2}\right) \quad \text{... (7)}$$

If we desire to determine the potential distribution along the x-axis, we can employ Poisson's equation which for one-dimensional analysis is written as

$$\frac{d^2 V(x)}{dx^2} = \frac{-\rho(x)}{\varepsilon_r \varepsilon_o} = -\frac{dE}{dx} \quad \text{... (8)}$$

where $\rho(x)$ is the charge density and ε_r is the relative dielectric constant of the semiconductor

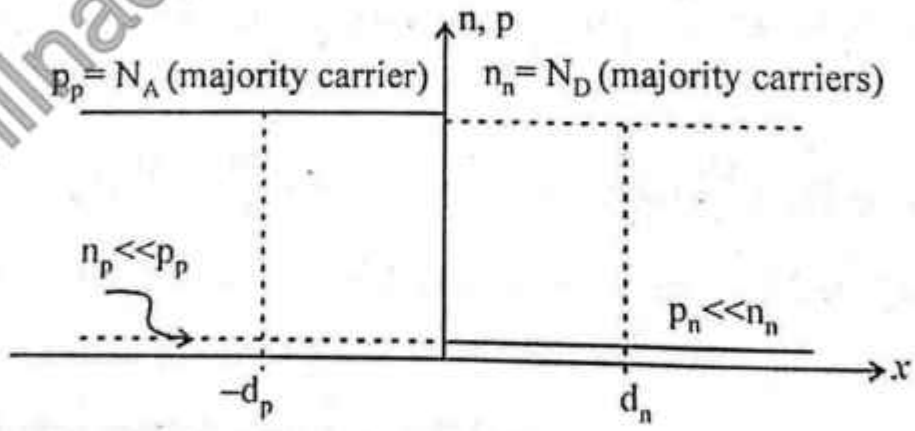

Figure 5.3 Acceptor and donor concentration

Assuming uniform doping and abrupt junction approximation as shown in figure 5.3 the charge density in each material is

$$\rho(x) = -qN_A, \text{ for } -d_p \le x \le 0 \quad \text{... (9)}$$

Tamilnadu College Of Engineering

$$\rho(x) = q\,N_D, \text{ for } 0 \le x \le d_n \qquad \text{... (10)}$$

where d_p and d_n are extents of space charges in p and n type semiconductor

The electric field in the semiconductor is found by integrating equation (8) with spatial limits $-d_p \le x \le d_n$ such that

$$E(x) = \int_{-d_p}^{x} \frac{\rho(x)dx}{\varepsilon_r\,\varepsilon_o} = \begin{cases} \dfrac{-q\,N_A}{\varepsilon_r\,\varepsilon_o}(x+d_p), & \text{for } -d_p \le x \le 0 \\ \dfrac{-q\,N_D}{\varepsilon_r\,\varepsilon_o}(d_n - x), & \text{for } 0 \le x \le d_n \end{cases} \qquad \text{... (11)}$$

To obtain voltage distribution profile, integrating equation (11) as follows

$$V(x) = \int_{-d_p}^{x} E(x)\,dx = \begin{cases} \dfrac{q\,N_A}{2\varepsilon_r\,\varepsilon_o}(x+d_p)^2, \text{ for } -d_p \le x \le 0 \\ \dfrac{q}{2\varepsilon_r\,\varepsilon_o}(N_A\,d_p^2 + N_D\,d_n^2)\ \dfrac{-q\,N_D}{2\varepsilon_r\,\varepsilon_o}(d_n - x)^2, \text{ for } 0 \le x \le d_n \end{cases} \qquad \text{... (12)}$$

Since total voltage drop must be equal to diffusion voltage V_{diff} it is found that

$$V(d_n) = V_{diff} = \frac{q\,N_A\,d_p^2}{2\varepsilon_r\,\varepsilon_o} + \frac{q\,N_D\,d_n^2}{2\varepsilon_r\,\varepsilon_o} \qquad \text{... (13)}$$

substituting $d_p = \dfrac{d_n\,N_D}{N_A}$ and solving (13) for d_n

$$d_n = \left[\frac{2\varepsilon\,V_{diff}}{q}\,\frac{N_A}{N_D}\left(\frac{1}{N_A + N_D}\right)\right]^{\frac{1}{2}} \qquad \text{... (14)}$$

where $\varepsilon = \varepsilon_o\,\varepsilon_r$. An identical derivation involving $d_n = \dfrac{d_p\,N_A}{N_D}$ gives us the space charge extent into p-semiconductor

$$d_p = \left[\frac{2\varepsilon\,V_{diff}}{q}\,\frac{N_D}{N_A}\left(\frac{1}{N_A + N_D}\right)\right]^{1/2} \qquad \text{... (15)}$$

Tamilnadu College Of Engineering

Entire length is addition of (14) & (15)

$$d_s = d_n + d_p = \left[\frac{2\varepsilon V_{diff}}{q}\left(\frac{1}{N_A}+\frac{1}{N_D}\right)\right]^{1/2} \quad \text{... (16)}$$

Junction capacitance $C = \frac{\varepsilon A}{d_s}$ ... (17)

substituting equation (16) in (17)

$$C = A\left[\frac{q\varepsilon}{2V_{diff}}\frac{N_A N_D}{N_A + N_D}\right]^{1/2} \quad \text{... (18)}$$

5.2 BIPOLAR JUNCTION TRANSISTORS (BJT)

Transistor Definition: A non linear three terminal active semiconductor device where the flow of electrical current between two of the terminals is controlled by the third terminal. The name is an acronym for transfer resistor.

Transistors may be used in circuits as amplifiers oscillators, detector, switches and so on.

Bipolar Junction transistor consists of three layers of semiconductors and two junctions. The semiconductor layer may be alternate N-type and P-type or vice versa. Thus BJTs are either emitter, base and collector and two Junctions are emitter base junction (EBJ) and collector base Junction (CBJ) as shown in figure 5.4 and 5.5

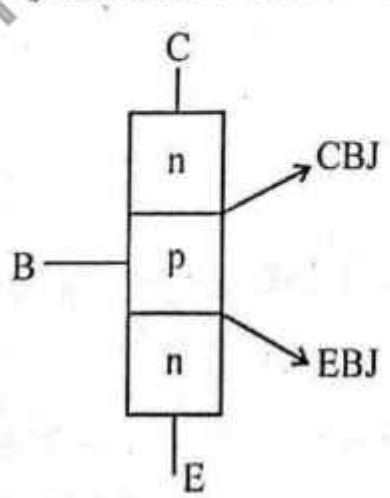

Figure 5.4 (a) NPN Transistor

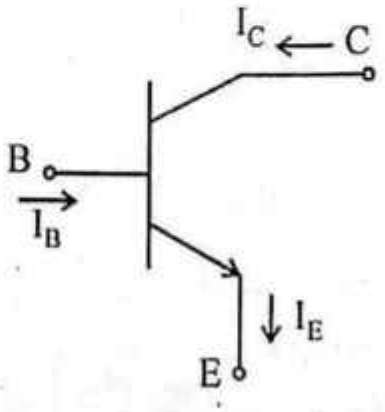

(b) An NPN circuit symbol

Tamilnadu College Of Engineering

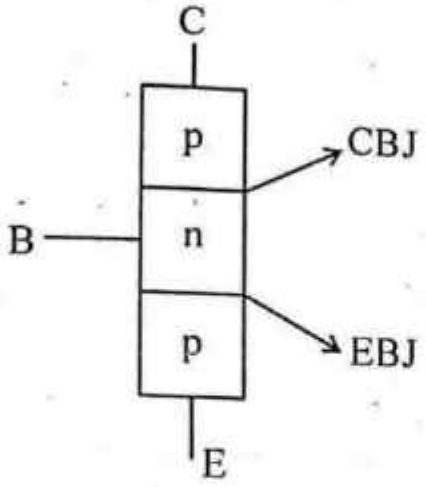

Figure 5.5 (a) PNP Transistor

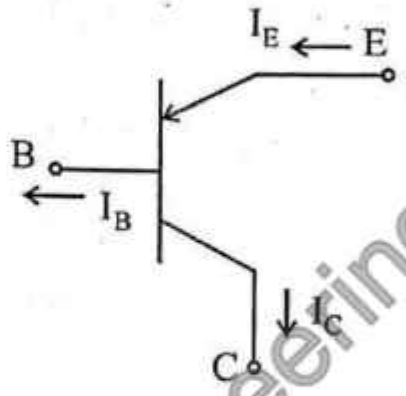

(b) PNP circuit symbol

5.2.1 Graphical Representation of BJT Characteristics

It is often useful to describe a BJT graphically in terms of its I-V characteristics. Consider the following conceptual circuit as shown in figure 5.6 where the transistor is connected in common emitter configuration. In this setup the DC voltage sources are independent variables and create three dependent variables (I_C, I_B, V_{CE}).

To obtain a single transistor characteristic curve that is plotted in the $I_C - V_{CE}$ plane with I_B as a parameter, DC voltage source is set to a voltage and then V_{CE} voltage source setting is theoretically varied from 0 to infinity while measuring corresponding collector current (I_C). This is shown in figure 5.7.

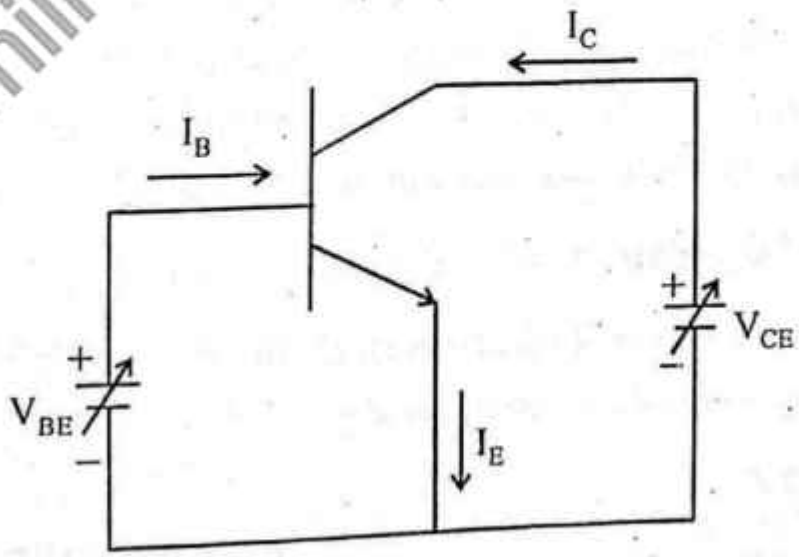

Figure 5.6 A conceptual circuit

Tamilnadu College Of Engineering

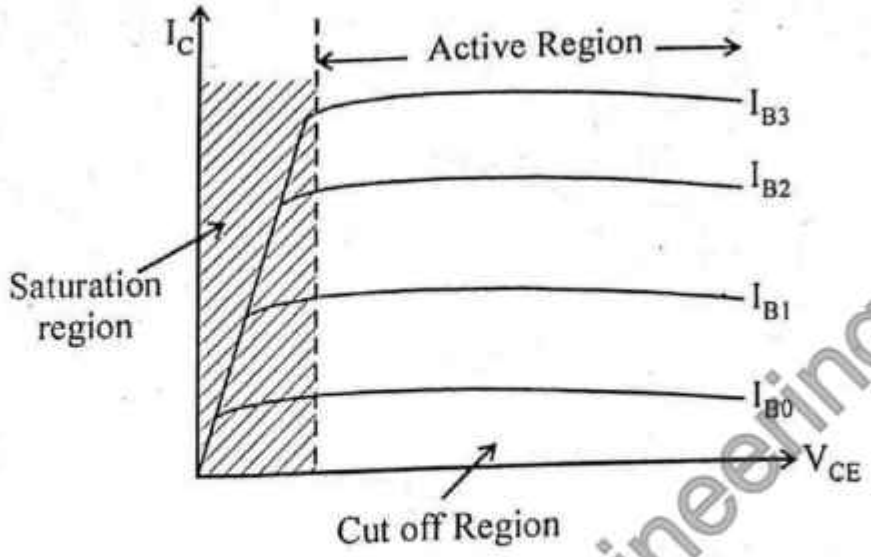

Figure 5.7 $I_C - V_{CE}$ characteristics of a BJT

$I_C - V_{CE}$ family of characteristic curves can be subdivided into several regions active, saturation and cut off.

5.2.2 BJT DC Biasing

The DC biasing of a transistor plays a major role in the operation and proper function of an active circuit.

DC Biasing Definition: It is the setting of the DC voltages at each of the two transistor junctions (EBJ or CBJ) such that the transistor will perform in a stable fashion in the intended mode (e.g., active mode for amplifiers, etc). Setting the proper values for each of the two transistor junction voltages can be translated equivalently into terminal current values such as emitter or collector current, which can alternatively be used to specify the DC bias values of the transistor. These currents in conjunction with the bias voltage values of junctions make the DC bias specification of a transistor complete.

5.2.3 BJT Modes of Operation

Depending on the bias conditions on each of the two Junctions (EBJ or CBJ), there can be four modes of operation. Assuming the following notations,

FWD = forward bias

REV = reverse bias

these four modes of operation are shown in figure 5.8.

Tamilnadu College Of Engineering

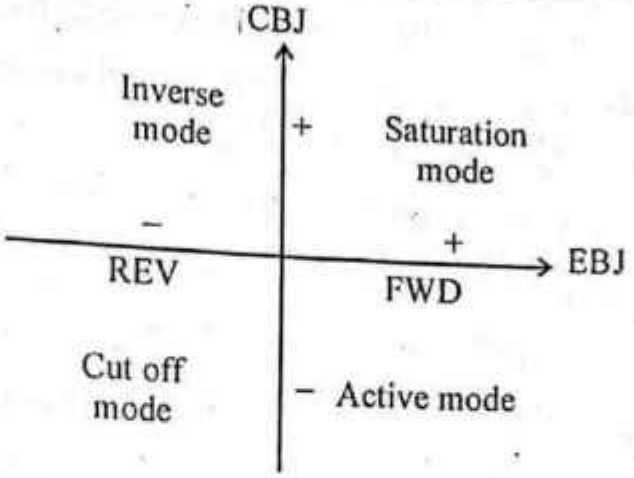

Figure 5.8 Four modes of operation of a BJT

Each mode can be defined as follows.

Saturation mode is the mode in which both EBJ and CBJ are forward biased. In this mode an increase in Base current (I_B) produces no further increase in collector current (I_C).

Cut off mode is the mode in which both EBJ and CBJ are reverse biased. Thus there is no current of any kind through the circuit. $I_E = 0$, $I_C = 0$ and $I_B = 0$. Active mode is the mode where EBJ is forward biased and CBJ is reverse biased. In this mode the collector current (I_C) is proportional to base current.

$$I_C = \beta I_B$$

where β is common emitter current gain

KCL gives $I_E = I_B + I_C = \left(1+\frac{1}{\beta}\right) I_C$

$$I_C = \frac{\beta}{1+\beta} I_E = \alpha I_E$$

where $\alpha = \frac{\beta}{1+\beta}$ is called common base current gain

A first order model for the operation of transistor in the active mode can be represented by hybrid–π equivalent circuit as shown in figure 5.9

$$I_C = I_S\, e^{\left(\frac{V_{BE}}{V_T}\right)}$$

where I_S is the reverse saturation current, V_T is thermal voltage defined to be $V_T = \frac{KT}{q}$, where K is Boltzmann's constant (1.38×10^{-23} J/K), T is absolute temperature in Kelvin and q is magnitude of electronic charge (1.602×10^{-19} C).

Tamilnadu College Of Engineering

In the first order model of the active mode the forward voltage (V_{BE}) causes an exponentially related collector current (I_C) to flow, and as long as the CBJ remains reverse biased ($V_{CB} > 0$), the collector terminal behave as a non linear voltage controlled current source depending exponentially on V_{BE}. β is common emitter current gain and is much larger than unity for a good transistor, $\beta >> 1$. As a result I_B is seen to be much smaller than I_C. Furthermore because α is very close to unity for a good transistor, the collector current I_C is approximately equal to emitter current (I_E): $I_C = I_E$.

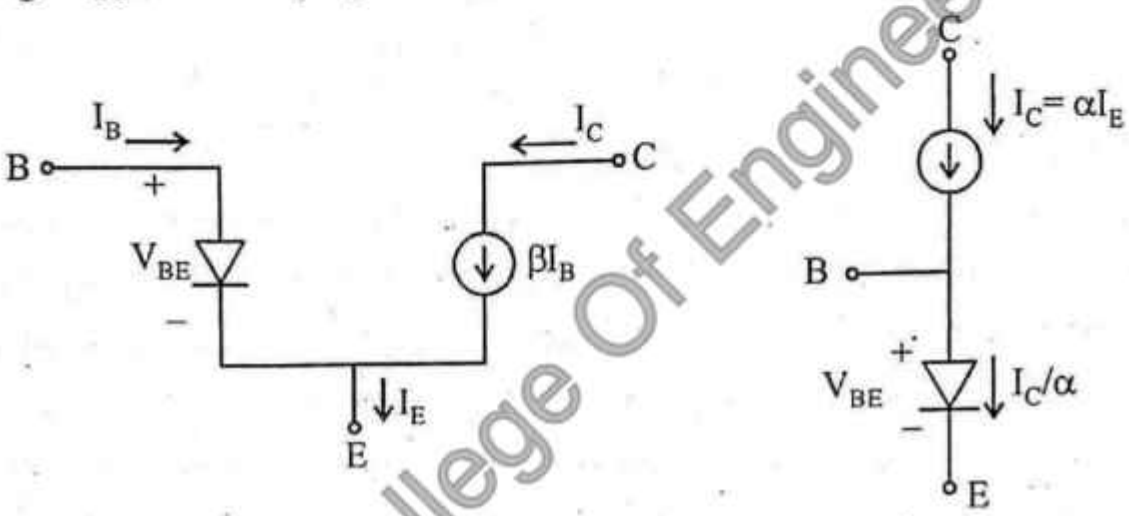

Figure 5.9 Two possible large-signal equivalent circuit models of NPN BJT in active mode.

Inverse mode is a mode in which the EBJ is reverse biased and CBJ is forward biased; that is emitter's and collector's roles are reversed. This mode may theoretically be used in the same manner as active mode.

5.3 RF FIELD EFFECT TRANSISTORS

Field effect transistors are monopolar devices meaning that only one carrier type, either holes or electrons contributes to the current flow through the channel. If hole contributions are involved it is of p-channel otherwise of n-channel FETs. FET is voltage controlled device. A variable electric field controls the current flow from source to drain by changing the applied voltage on the gate electrode.

5.3.1 Construction

FETs are classified according to how the gate is connected to the conducting channel. Specifically the following four types are used.

Tamilnadu College Of Engineering

1. **Metal Insulator semiconductor FET (MISFET):** Here gate is separated from the channel through an insulation layer one of the most widely used types, the metal oxide semiconductor FET (MOSFET) belongs to this class.
2. **Junction FET(JFET):** This type relies on a reverse biased pn-junction that isolates gate from the channel.
3. **Metal semiconductor FET(MESFET):** If the reverse biased pn-junction is replaced by a schottky contact, the channel can be controlled just as in the JFET case.
4. **Hetero FET:** As the name implies heterostructure utilize abrupt transition between layers of different semiconductor materials. Examples are GaAlAs to GaAs. The High electron mobility Transistor (HEMT) belongs to this class.

Due to presence of a large capacitance formed by the gate electrode and the insulator or reverse biased pn junction, MISFET and JFET have a relatively low cut off frequency and are usually operated in low and medium frequency ranges of typically up to 1GHz. GaAs MESFET find application up to 60 – 70 GHz, and HEMT can operate beyond 100 GHz.

5.3.2 Functionality

Because of its importance in RF and microwave amplifier, mixer and oscillator circuits, we focus our analysis on the MESFET, whose physical behaviour is in many ways similar to the JFET. The analysis is based on the geometry shown in figure 5.10 where the transistor is operated in depletion mode.

The schottky contact builds up a channel space charge domain that affect the current flow from source to drain. The space charge extent d_s can be controlled via the gate voltage.

$$d_s = \left(\frac{2\varepsilon}{q} \frac{V_d - V_{GS}}{N_D} \right)^{1/2} \quad \text{... (1)}$$

For instance the barrier voltage V_d is 0.9 V for GaAs–Au interface. The resistance R between source and drain is predicted by

$$R = \frac{L}{\sigma (d - d_s) W} \quad \text{... (2)}$$

Tamilnadu College Of Engineering

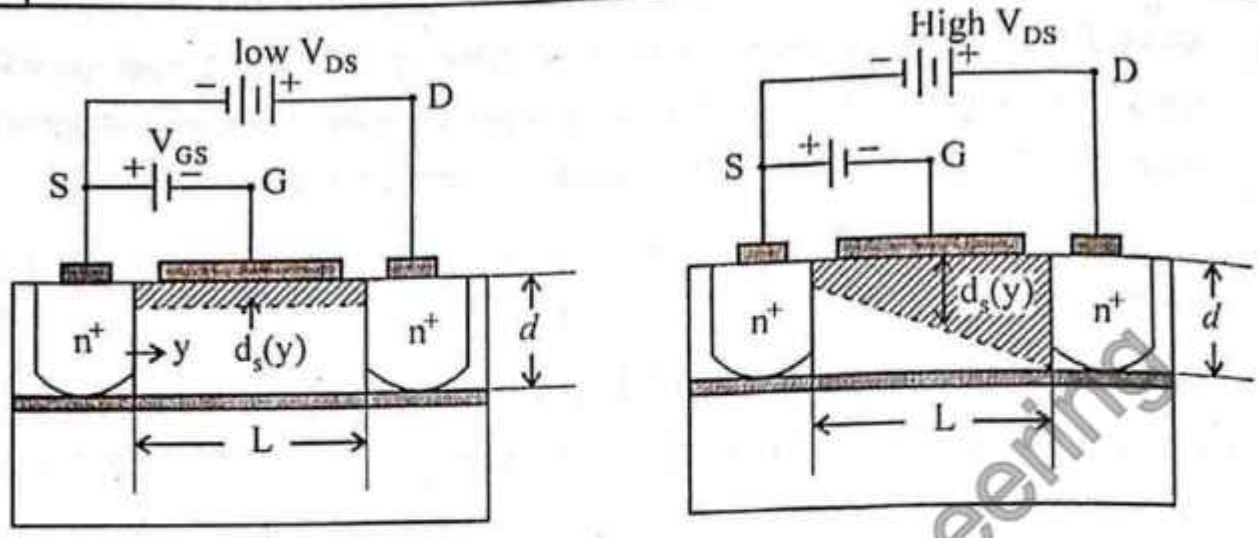

(a) Operation in linear region (b) Operation in saturation region

Figure 5.10 Functionality of MESFET for different drain-source voltages

$\sigma = q\mu_n N_D$, W being gate width.

substituting (1) in (2) yields the drain current equation

$$I_D = \frac{V_{DS}}{R} = G_0\left[1-\left(\frac{2\varepsilon}{qd^2}\frac{V_d - V_{GS}}{N_D}\right)^{1/2}\right]V_{DS} \quad \text{...(3)}$$

where $G_0 = \frac{\sigma Wd}{L}$. This equation shows that the drain current depends linearly on drain source voltage, a fact that is only true for small V_{DS}.

As the drain source voltage increases, the space change domain near the drain contact increases as well, resulting in a non uniform distribution of the deflection region along the channel.

If we assume that the voltage along the channel changes from 0 at the source location to V_{DS} at the drain end then we can compute the drain current for non uniform space charge region. This approach is also known as gradual-channel approximation. The approximation rests primarily on the assumption that the cross sectional area at a particular location y along the channel is given by $A(y) = (d - d_s(y))$ W and electric field E is only y-directed.

The channel current is thus

$$I_D = -\sigma EA(y) = \sigma\frac{dV(y)}{dy}\left(d - d_s(y)\right)W \quad \text{...(4)}$$

Tamilnadu College Of Engineering

where the difference between V_d and V_{GS} in the expression for $d_s(y)$ has to be augmented by the additional drop in voltage V(y) along the channel. So equation (1) becomes

$$d_s(y) = \left[\frac{2\varepsilon}{q N_D}(V_d - V_{GS} + V(y)\right]^{1/2} \quad \text{... (5)}$$

substituting (5) in (4) and carrying out the integration on both sides of equation yields

$$\int_0^L I_D\, d_y = I_D L = \sigma W \int_0^{V_{DS}} \left[d - \left[\frac{2\varepsilon}{q N_D}(V + V_d - V_{GS})\right]^{1/2}\right] dV \quad \text{... (6)}$$

The result is the output characteristic of the MESFET in terms of drain current as a function of V_{DS} and V_{GS} or

$$I_D = G_0\left[V_{DS} - \frac{2}{3}\sqrt{\frac{2\varepsilon}{q N_D d^2}}[V_{DS} + V_d - V_{GS}]^{3/2} - (V_d - V_{GS})^{3/2}\right] \quad \text{... (7)}$$

We note that this equation reduces to (3) for small V_{DS}. When the space charge extends over the entire channel depth d, the drain source voltage for this situation is called drain saturation voltage $V_{DS\,sat}$ and is given by

$$d_s(L) = d = \sqrt{\frac{2\varepsilon}{q N_D}(V_d - V_{GS} + V_{DSsat})} \quad \text{... (8)}$$

or explicitly

$$V_{DS\,sat} = \frac{q N_D d^2}{2\varepsilon} - (V_d - V_{GS}) = V_p - V_d + V_{GS} = V_{GS} - V_{T0} \quad \text{... (9)}$$

where V_p pinch off voltage $= \dfrac{q N_D d^2}{2\varepsilon}$ and threshold voltage $V_{T0} = V_d - V_p$. The associated drain saturation current is found by inserting (9) into (7) with result

$$I_{D\,sat} = G_0\left[\frac{V_p}{3} - (V_d - V_{GS}) + \frac{2}{3\sqrt{V_p}}(V_d - V_{GS})^{3/2}\right] \quad \text{... (10)}$$

The maximum saturation current in equation (10) is obtained when $V_{GS} = 0$, which we define as $I_{Dsat}(V_{GS} = 0) = I_{DSS}$. Input and output transfer as well as output characteristic behaviour is shown in figure 5.11.

Tamilnadu College Of Engineering

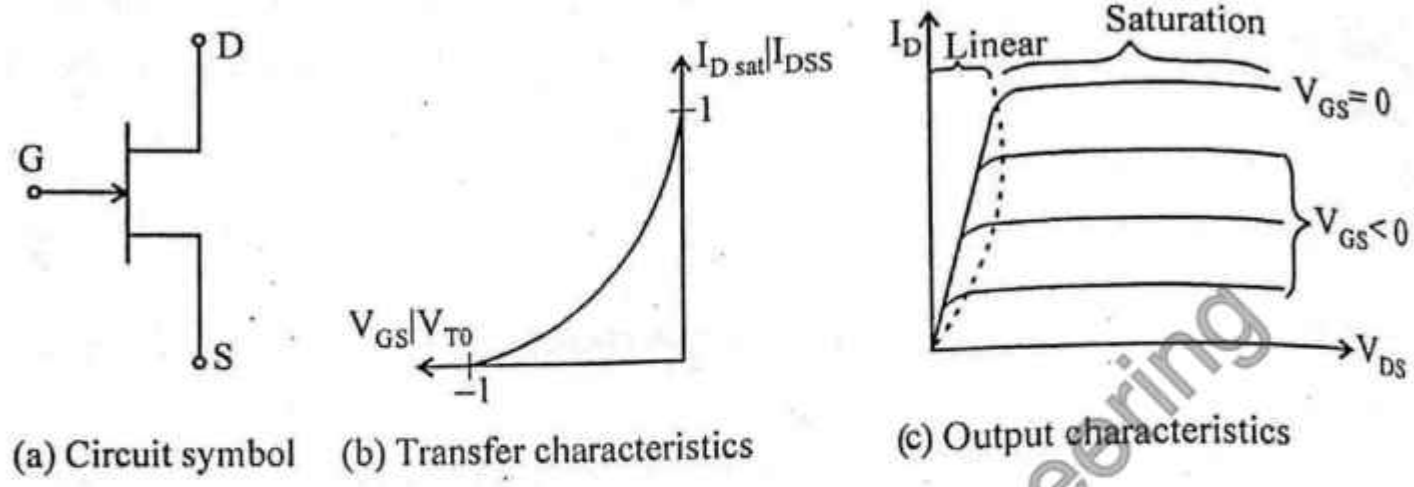

(a) Circuit symbol (b) Transfer characteristics (c) Output characteristics

Figure 5.11 Transfer and output characteristics of an n-channel MESFET

The saturation drain current is often approximated by simple relation.

$$I_{Dsat} = I_{DSS}\left(1-\frac{V_{GS}}{V_{T0}}\right)^2 \qquad \text{... (11)}$$

Example 1

For a particular Si pn-junction , the doping concentrations are given as $N_A = 10^{18}\ cm^{-3}$ and $N_D = 5 \times 10^{15} cm^{-3}$, with an intrinsic concentration of $n_i = 1.5 \times 10^{10}\ cm^{-3}$. Find the barrier voltage for T = 300 K

☞ ***Solution:***

Given data,

$N_A = 10^{18}\ cm^{-3}$, $N_D = 5 \times 10^{15} cm^{-3}$

$n_i = 1.5 \times 10^{10}\ cm^{-3}$, T = 300 K

$$V_{diff} = V_T \ln\left(\frac{N_A\ N_D}{n_i^2}\right)$$

$$= \frac{KT}{q} \ln\left(\frac{N_A\ N_D}{n_i^2}\right)$$

$$V_{diff} = 0.796\ V.$$

Tamilnadu College Of Engineering

Example 2

A GaAs MESFET has following parameters $N_D = 10^{16}\ cm^{-3}$, $d = 0.75\ \mu m$, $W = 10\ \mu m$, $L = 2\ \mu m$, $\varepsilon_r = 12.0$, $V_d = 0.8\ V$ and $\mu_n = 8500\ cm^2/VS$. Determine

(i) The pinch off voltage

(ii) Threshold voltage

(iii) Maximum saturation current.

Solution:

Given data:

$N_D = 10^{16}\ cm^{-3}$, $d = 0.75\ \mu m$, $W = 10\ \mu m$, $L = 2\ \mu m$, $\varepsilon_r = 12.0$ $V_d = 0.8\ V$ & $\mu_n = 8500\ cm^2/VS$

i) Pinch off voltage $V_p = \dfrac{q N_D d^2}{2\varepsilon}$

$$V_p = 4.24\ V$$

ii) Threshold voltage $V_{T0} = V_d - V_p$

$$= 0.8 - 4.24$$

$$V_{T0} = -3.44\ V$$

iii) Maximum saturation current

$$I_{DSS} = G_0\left[\frac{V_p}{3} - V_d + \frac{2}{3\sqrt{V_p}} V_d^{3/2}\right]$$

$$G_0 = \frac{\sigma q N_D Wd}{L} = \frac{q^2 \mu_n N_D^2 Wd}{L} = 8.16$$

$$I_{DSS} = 6.89\ A$$

5.4 HIGH ELECTRON MOBILITY TRANSISTORS

It is also known as modulation doped field effect transistor exploits the differences in bandgap energy between dissimilar semiconductor materials such as GaAlAs and GaAs in an effort to substantially surpass the upper frequency limit of MESFET while maintaining low noise performance and high power rating. Transition frequencies of 100 GHz and above have been achieved. The high frequency behaviour is due to a separation of carrier

Tamilnadu College Of Engineering

electrons from their donor sites at the interface between doped GaAlAs and undoped GaAs layer, where they are confined to a very narrow layer in which motion is possible only parallel to the interface. Here a two dimensional electron gas (2DEG) or plasma of very high mobility upto 9000 $cm^2/V\text{-}S$.

5.4.1 Construction

The basic heterostructure is shown in figure 5.12 where a GaAlAs n-doped semiconductor is followed by an undoped GaAlAs spacer layer, an undoped GaAs layer and a highly resistive semi-insulating GaAs substrate.

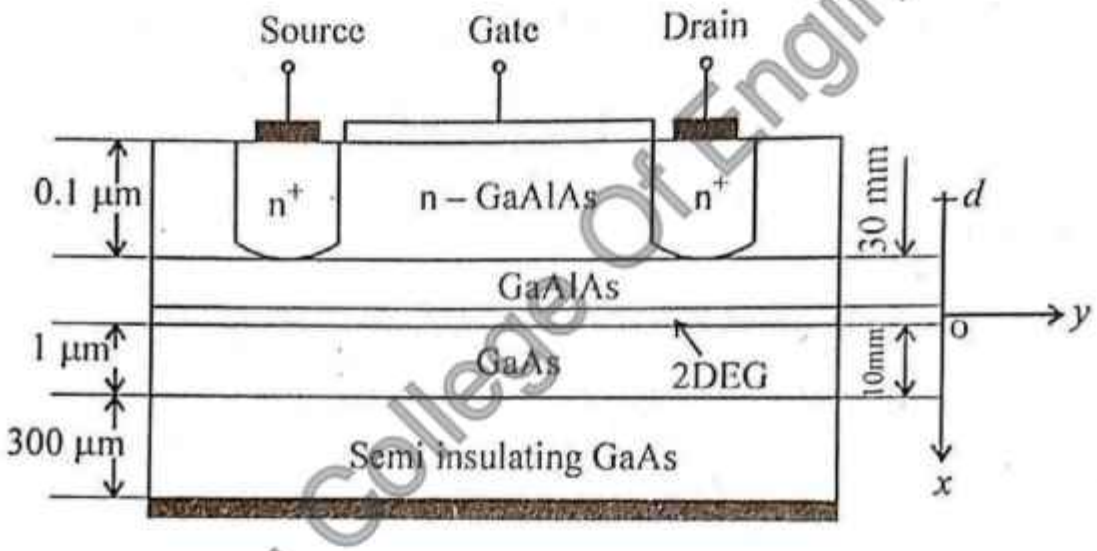

Figure 5.12 Generic heterostructure of a depletion-mode HEMT

The 2DEG forms in the undoped GaAs layer at zero gate bias condition because the fermi level is above the conduction band, so that electrons accumulate in this narrow potential well. The electron concentration can be depleted by applying an increasingly negative gate voltage.

HEMTS are primarily constructed of heterostructures with matching lattice constants to avoid mechanical tensions between layers. Examples are GaAlAs-GaAs and InGaAs-Inp interfaces. A larger In GaAs lattice is compressed onto a smaller GaAs lattice. Such a device configuration are known as pseudomorphic HEMTs or PHEMTs.

5.4.2 Functionality

The key issue that determines the drain current flow in a HEMT is the narroe interface between GaAlAs & GaAs layers.

Tamilnadu College Of Engineering

A mathematical model can be developed by writing the one dimensional poisson equation in the form

$$\frac{\partial^2 V}{\partial x^2} = \frac{-q N_D}{\varepsilon_H} \quad \text{... (1)}$$

where N_D & ε_H are donor concentration and dielectric constant in the GaAlAs heterostructure. The boundary condition for the potential are imposed such that $V(x=0) = 0$ and at the metal semiconductor side $V(x=-d) = -V_b + V_G + \Delta W_C / q$. Here V_b is barrier voltage, ΔW_C is energy difference in the conduction levels between the n-doped GaAlAs and GaAs and V_G is composed of the gate source voltage as well as the channel voltage drop $V_G = -V_{GS} + V(y)$. To find potential equation (1) is integrated twice. At the metal-semiconductor interface, we set

$$V(-d) = \frac{q N_D}{2\varepsilon_H} x^2 - E_y(0)\, d \quad \text{... (2)}$$

which yields

$$E(0) = \frac{1}{d}\left(V_{GS} - V(y) - V_{T0}\right) \quad \text{... (3)}$$

where defined the HEMT threshold voltage V_{T0} as $V_{T0} = \dfrac{V_b - \Delta W_C}{q - V_p}$

where $V_p = \dfrac{q N_D d^2}{2\varepsilon_H}$

$$I_D = \sigma E_y A = -q\mu_n N_D EWd = q\mu_n N_D \left(\frac{dV}{dy}\right) Wd \quad \text{... (4)}$$

the current flow is restricted to a very thin layer so that it is appropriate to carry out the integration over a surface charge density Q_s at $x = 0$.

The result is $\sigma = \dfrac{-\mu_n Q}{WL\, d} = \dfrac{-\mu_n Q_s}{d}$. For the surface charge density, find with Gauss's law $Q_s = \varepsilon_H E(0)$

substitute in (4)

$$\int_0^L I_D\, dy = \mu_n W \int_0^{V_{DS}} Q_s\, dV \quad \text{... (5)}$$

Tamilnadu College Of Engineering

Using (3) It is seen that drain current can be found

$$I_D L = \mu_n W \int_0^{V_{DS}} \frac{\varepsilon_H}{d}(V_{GS} - V - V_{T0})\, dV \quad \cdots (6)$$

or

$$I_D = \mu_n \frac{W \varepsilon_H}{Ld}\left[V_{DS}(V_{GS} - V_{T0}) - \frac{V_{DS}^2}{2}\right] \quad \cdots (7)$$

pinch off occur when drain-source voltage is equal to or greater than difference of gate–source and threshold voltages $(V_{DS} \geq V_{GS} - V_{T0})$. If the equality of this condition is substituted in (7) it is seen that

$$I_D = \mu_n \frac{W \varepsilon_H}{2Ld}(V_{GS} - V_{T0})^2 \quad \cdots (8)$$

The threshold voltage allows us to determine if the HEMT is operated as an enhancement or depletion type. For the depletion type, we require $V_{T0} < 0$ or $V_b - \left(\frac{\Delta W_C}{a}\right) - V_p < 0$.

substituting the pinch off voltage $V_p = \frac{q N_D d}{2\varepsilon_H}$ and solving for d, this implies

$$d > \left[\frac{2\varepsilon_H}{q N_D}\left(V_b - \frac{\Delta W_C}{q}\right)\right]^{1/2} \quad \cdots (9)$$

and if d is less than the $V_{T0} > 0$, we deal with an enhancement HEMT.

5.5 BASIC CONCEPTS OF RF DESIGN

5.5.1 RF Circuit Design Consideration

Low RF circuits have to go through a three – step design process. In this design process, the effect of wave propagation on the circuit operation is negligible and the following facts in connection with design process can be stated:

1. The length of the circuit (l) is generally much smaller than wavelength ($l \ll \lambda$)
2. Propagation delay time (t_d) is approximately zero ($t_d = 0$)
3. Maxwell's equations simplify into all of the low frequency laws such as KVL, KCL. Therefore at RF frequencies, the delay time of propagation is approximately zero when $l \ll \lambda$ and all elements in the circuit can be considered to be lumped.

Tamilnadu College Of Engineering

The design process has following three steps

Step 1: The design process starts with selecting a suitable device and performing a DC design to obtain a proper Q-point.

Step 2: The device will be characterized to obtain its AC small signal parameters based on the specific DC operating point selected earlier.

Step 3: It consist of designing two matching circuits that transition this device to the outside world, the signal source at one end and load at the other.

The design process for RF circuit is summarized and shown in figure 5.13.

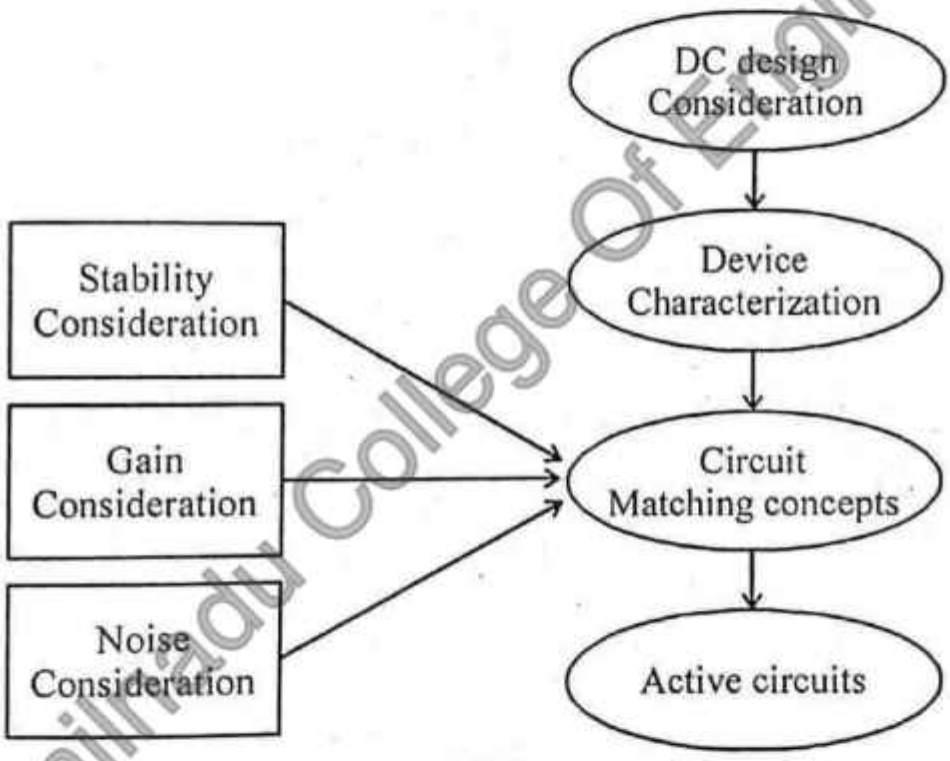

Figure 5.13 RF circuit design steps

Tamilnadu College Of Engineering

5.5.2 High RF and Microwave Circuit Design Consideration

Step 1: The design process starts with the design of DC circuit to establish a stable operating point.

Step 2: Characterize the device at the operating point using electrical waves to measure the percentage of reflection and transmission that device presents at each port.

Step 3: Designing the matching network that transition the device to the outside world such that the required specification such as stability, overall gain, etc., are satisfied.

5.6 MIXER

Definition: A non linear 3 port circuit (Two in and one output) that generates a spectrum of output frequencies equal to sum or difference of two input frequencies and their harmonics. The two input ports are referred as RF and LO where as the output is called IF port.

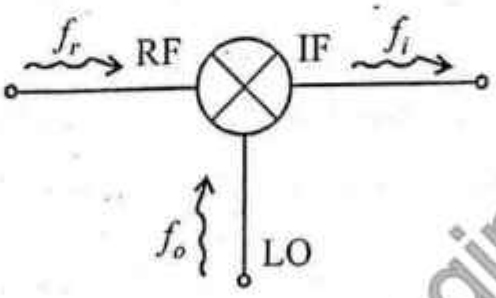

Figure 5.14 (a) Mixer symbol

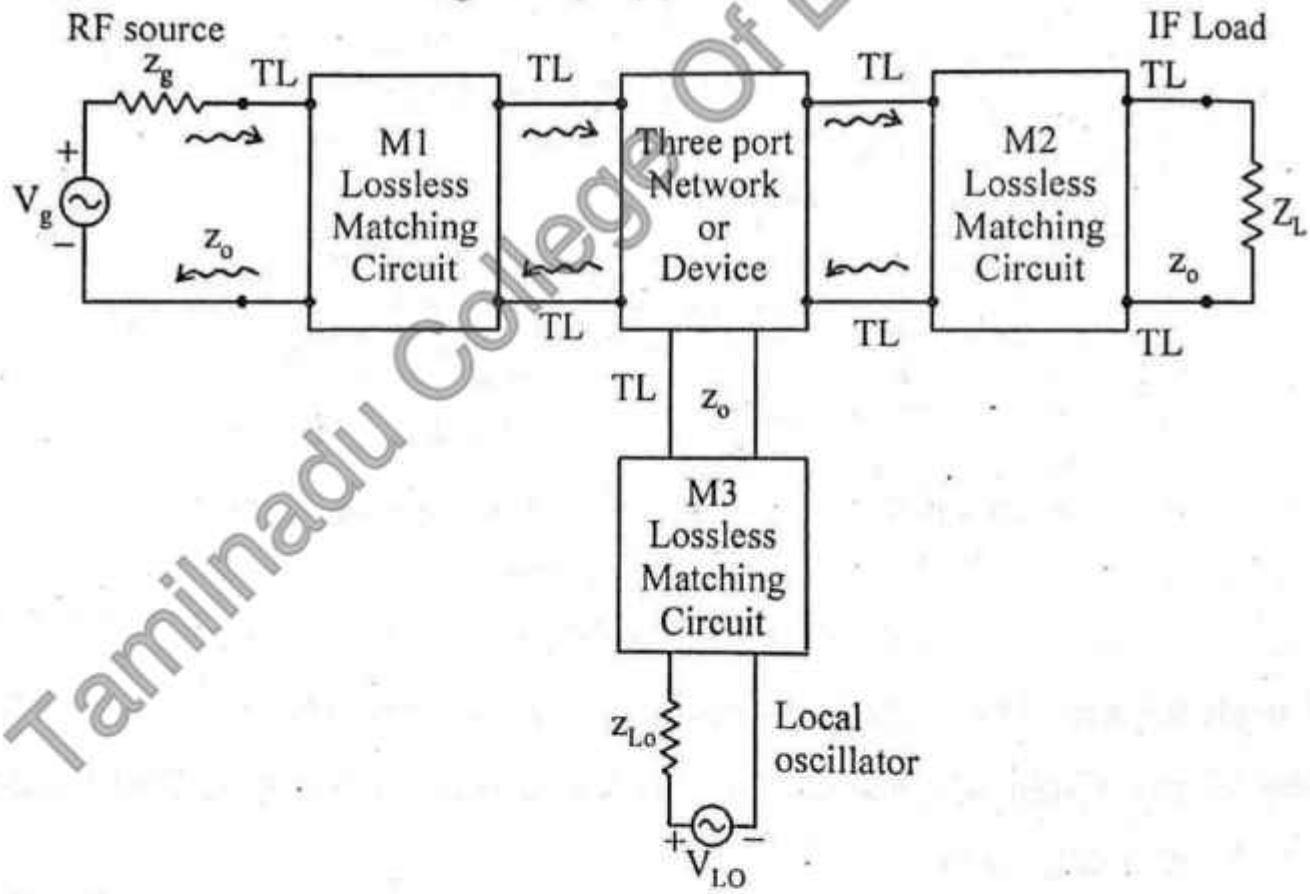

Figure 5.14 (b) Mixer block diagram

Mixer uses the non linearity of a device to generate a spectrum of frequencies (at the IF port) based on sum and difference of harmonics of the RF signal and local oscillator signal frequencies as shown in figure 5.14. The non linear device is flanked on three sides by three matching circuits,, which need to be designed properly for maximum conversion efficiency.

Tamilnadu College Of Engineering

In general, mixers utilize one or more non linear device, properly pumped with a relatively large signal (called LO) to mix with an RF signal in order to generate a spectrum of frequencies based on the sum and difference of harmonics of the RF & LO frequencies.

$$\omega_i = m\omega_r \pm n\omega_o$$

Where m & n are positive integers.

The most important terms for mixer operation are those with frequencies at $\omega_r + \omega_o$ and at $\omega_r - \omega_o$..

5.6.1 Types of Mixers

5.6.1.1 Up – Converters

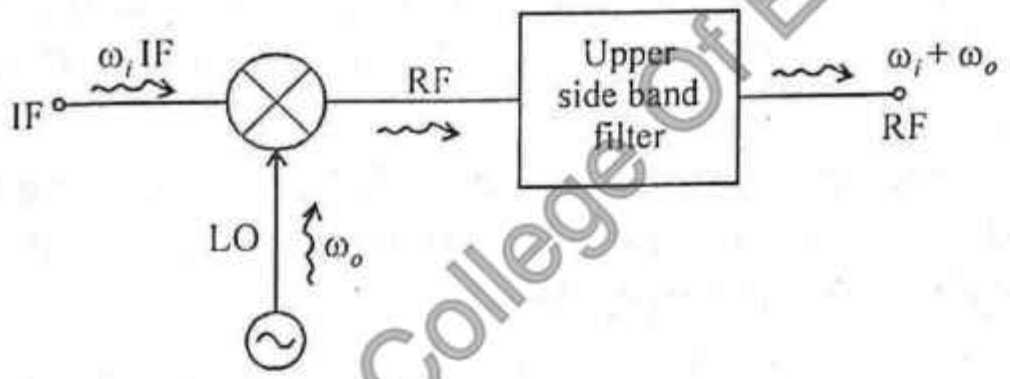

Figure 5.15 (a) Up conversion in a transmitter

When a mixer is used as an up converter the sum frequency $f_i = f_o + f_r$ is utilized and the difference frequency is rejected. In an up converter shown in figure 5.15 (a) the IF oscillator is modulated with desired information signal which when mixed with LO signal will generate the desired frequency conversion. Use of mixer as an up converter particularly in case of a radar or a transceiver is advantageous because it allows the use of a single local oscillator for both receiver and transmitter .

$$\omega_r = \omega_o + \omega_i$$

Use of proper filtering or an image rejection mixer is needed to generate the sum frequency ($\omega_r = \omega_o + \omega_i$). An up converters is used in a transmitter to modulate a carrier wave (LO signal) with an information bearing signal (IF signal) in order to generate an RF signal for transmission.

Tamilnadu College Of Engineering

5.6.1.2 Down Converter

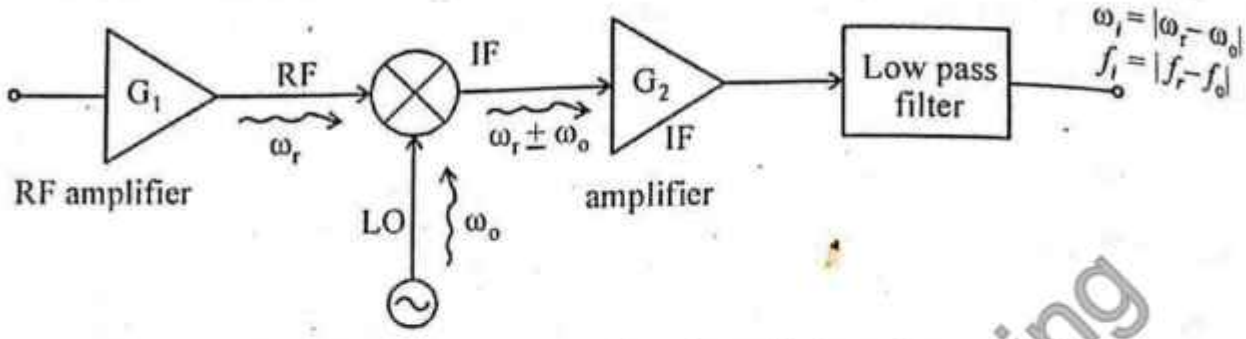

Figure 5.15 (b) Down conversion in a heterodyne receiver

When application requires a down – conversion the difference frequency $f_i = f_o - f_r$ is used and sum frequency is filtered out as shown in figure 5.15 (b). Use of mixer as a down converter in heterodyne receiver has several advantages.

- ✓ The IF signal being in the range of 10 MHz $\leq f_{IF} \leq$ 100 MHz lends itself for low noise amplification because 1/f noise is lower in IF than in RF frequency range.
- ✓ By changing the LO frequency, a heterodyne receiver can be tuned to receive a wide band of RF frequencies without a need for a high gain wideband RF amplifier which would have been necessary otherwise.

A down converter is a mixer that, with help of an LO shift the frequency of the RF signal substantially down to an IF signal ready for further signal processing. The IF signal frequency is given by

$$\omega_i = |\omega_r - \omega_o|$$

Such a mixer is used in receiver as a demodulator to remove the carrier wave from the transmitted signal in order to obtain the information carrying signal.

5.6.1.3 Harmonic Mixers

A simple method of down converting a high frequency RF signal when only a low frequency LO exist is the use of harmonic mixers. Frequency down conversion is achieved by mixing the high frequency signal with an appropriate harmonic of LO frequency.

$$\omega_i = n\omega_o - \omega_r$$

Where $n = 1, \ldots N$ is an integer, when $n = 1$ a fundamental down converter is obtained.

Applications of harmonic mixers are in millimeter wave instrumentation where the use of high frequency LO source, which can generate substantial power to satisfy LO power needs is impractical or very expensive.

Tamilnadu College Of Engineering

5.7 LOW NOISE AMPLIFIERS

A Low noise amplifier is an electronic amplifier that amplifies very low power signal without significantly degrading its signal to noise ratio. LNAs are designed to amplify a signal while minimizing additional noise.

LNA are found in radio communication system, medical instruments and electronic test equipment.

A typical LNA may supply a power gain of 100 while decreasing the signal to noise ratio by less than factor of two. LNA as shown in figure 5.16.

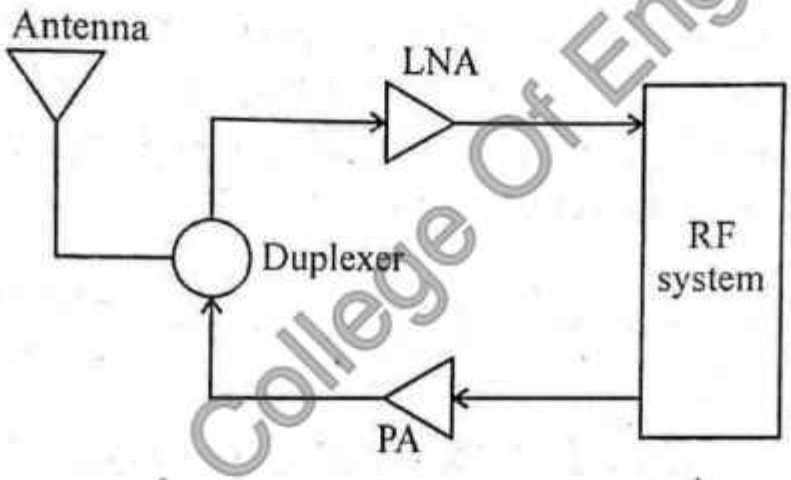

Figure 5.16 Block diagram of LNA

The low noise amplifier of receiver path and power amplifier of transmit path connected to the antenna via duplexer, which separate the two signals and prevents the relatively powerful power amplifier output from overloading the sensitive LNA input.

For LNA, the primary parameters are noise figure (NF), gain, and non linearity. Noise is due to thermal and other sources with typical noise figure 0.5 to 1.5 dB range. The noise figure helps determine the efficiency of particular LNA. Low noise figure results in better signal reception. With low noise figure, an LNA must have high gain. Typical gain is between 10 and 20 dB for a single stage.

LNAs are used in applications such as industrial scientific and medical band (ISM) radios, cellular telephones, GPS receivers, wireless LANs, satellite communication.

Tamilnadu College Of Engineering

5.8 VOLTAGE CONTROL OSCILLATORS

A voltage controlled oscillator is an oscillator with an output signal whose output can be varied over a range, which is controlled by the input DC voltage. It is an oscillator whose output frequency is directly related to the voltage at its input. The oscillation frequency varies from few hert Z to hundred of GHz.

Types of voltage controlled oscillators.

Harmonic oscillators. The output is a signal with sinusoidal waveform. Examples are crystal oscillators and tank oscillators.

Relaxation oscillators:

The output is a signal with saw tooth or triangular waveform and provides a wide range of operational frequencies. The output frequency depends on time of charging and discharging of capacitor. Block diagram of VCO is shown in figure 5.17 and saw tooth wave generator VCO is shown in figure 5.18.

Figure 5.17 Block diagram of VCO

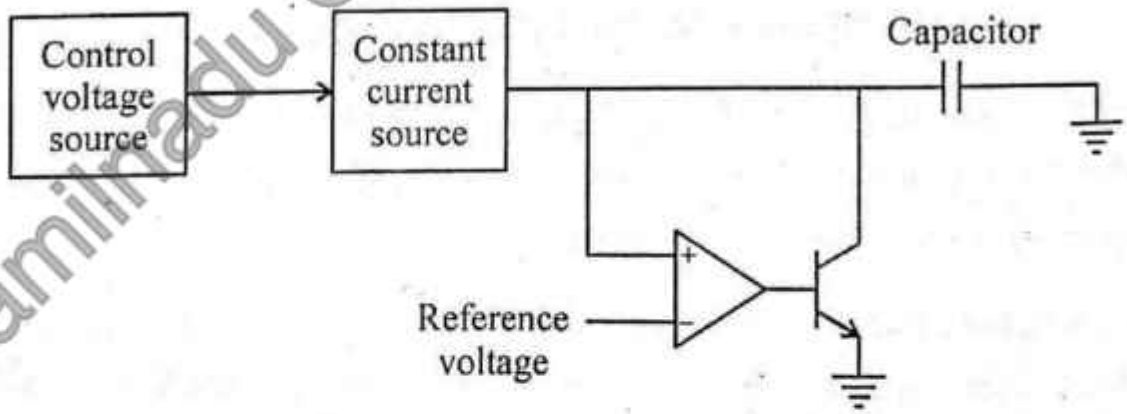

Figure 5.18 Basic working principle of saw tooth wave generator VCO

For a voltage controlled oscillator generating a saw tooth waveform, main component is capacitor who's charging & discharging actually decides formation of output waveform. The input is given in the form of voltage which can be controlled. This voltage is converted into a current signal and is applied to capacitor. As current passes through capacitor it starts charging and voltage starts building across it. As the capacitor charges and voltage across it increases gradually, the voltage is compared with a reference voltage using a comparator.

Tamilnadu College Of Engineering

When capacitor voltage exceeds reference voltage, the comparator generate high logic output which trigger the transistor and capacitor is connected to ground and starts discharging. Thus the output waveform generated is the representation of charging and discharging of capacitor and frequency is controlled by input dc voltage.

Applications of VCO

- Electronic Jamming equipment
- Function generator
- Phase locked loop
- Frequency synthesizer, used in communication circuits.

5.9 POWER AMPLIFIER

The RF power amplifier is the last component of transmitter chain. The purpose of transmitter is to deliver an RF signal with required properties and specified power level to the antenna and need for the PA (Power Amplifier) is in amplification of that signal to level expected at antenna port.

Requirements of power amplifier

- ✓ It has to have sufficient gain
- ✓ It has to have sufficient power handling capability
- ✓ It has to be stable.

5.10 AMPLIFIER POWER RELATIONS

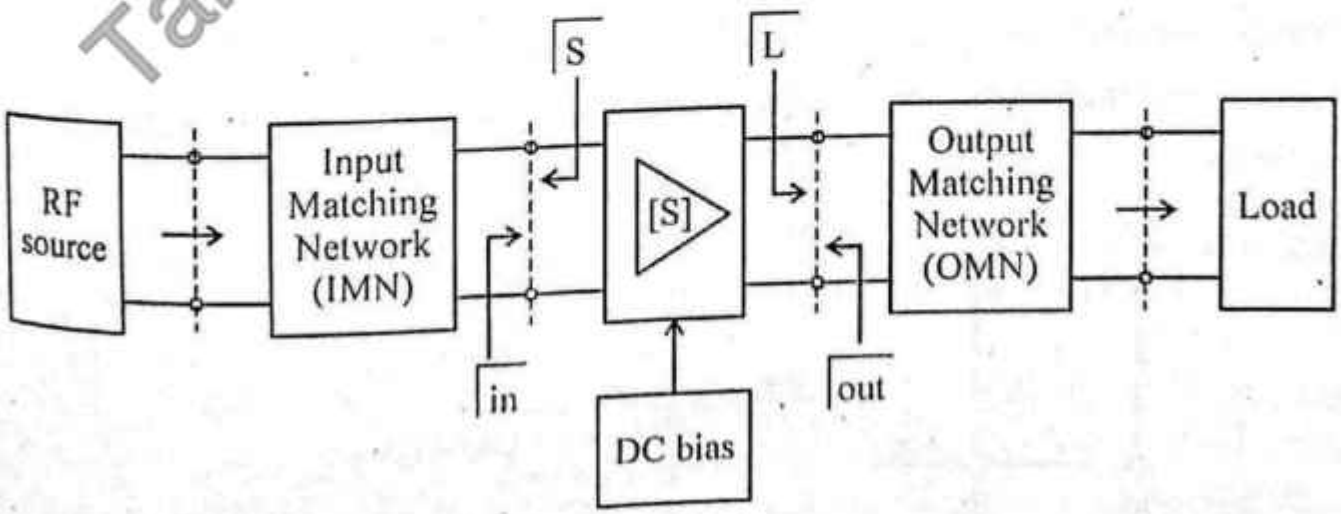

Figure 5.19 Generic amplifier system

Tamilnadu College Of Engineering

A generic single stage amplifier configuration embedded between input and output matching networks is shown in figure 5.19. Input and output matching networks are needed to reduce undesired reflections and thus improve the power flow capabilities. The amplifier is characterized through its S parameter matrix at a particular DC bias point. The following list constitute a set of key amplifier parameters:

- ✓ Gain and gain flatness (in dB)
- ✓ Operating frequency and bandwidth (in Hz)
- ✓ Output power (in dBm)
- ✓ Power supply requirements (in V and A)
- ✓ Noise figure (in dB)

5.10.1 RF Source

There are various power gain definitions that are critical to the understanding of how an RF amplifier functions.

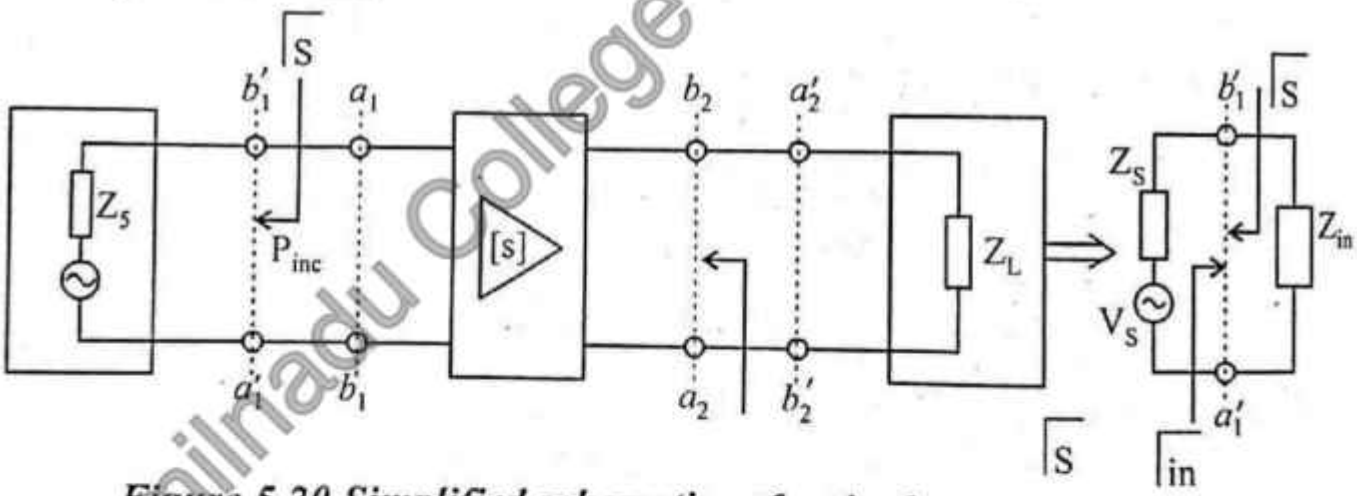

Figure 5.20 Simplified schematics of a single stage amplifier

For this reason let us examine figure 5.19 in terms of its power flow relations under the assumption that the two matching networks are included in the source and load impedances.

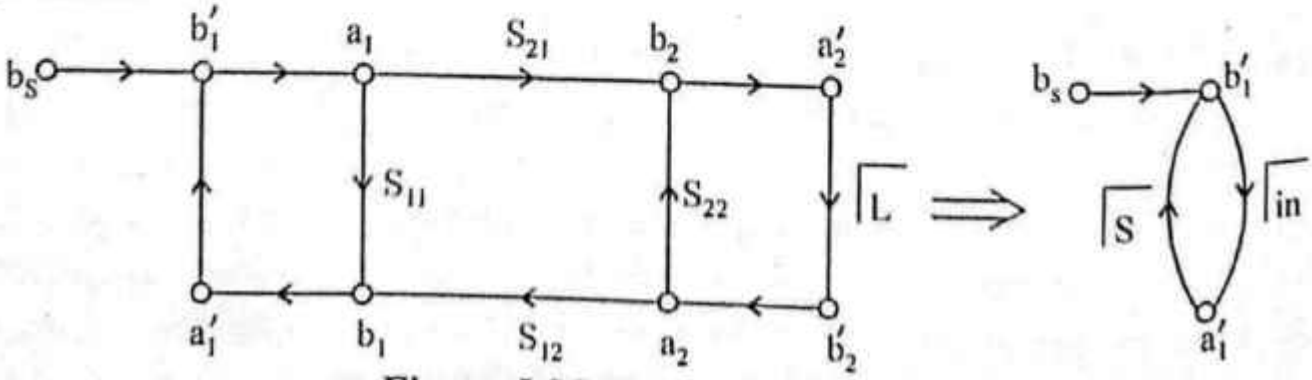

Figure 5.21 Signal flow graph

Tamilnadu College Of Engineering

$$b_S = \frac{\sqrt{z_o}}{z_S + z_o} V_S = b_1' - a_1' \Gamma_S = b_1' \left(1 - \Gamma_{in} \Gamma_S\right) \quad ...(1)$$

The incident power wave associated with b_1' is given as

$$P_{inc} = \frac{|b_1'|^2}{2} = \frac{1}{2} \frac{|b_S'|^2}{\left|1 - \Gamma_{in}\Gamma_S\right|^2} \quad ...(2)$$

Which is the power launched towards the amplifier. The actual input power P_{in} observed at the input terminal of the amplifier is composed of the incident and reflected power waves with the aid of the input reflection coefficient Γ_{in}.

$$P_{in} = P_{inc}\left(1 - \left|\Gamma_{in}\right|^2\right) = \frac{1}{2} \frac{|b_S|^2}{\left|1 - \Gamma_{in}\Gamma_S\right|^2}\left(1 - \left|\Gamma_{in}\right|^2\right) \quad ...(3)$$

The maximum power transfer from the source to the amplifier is achieved if the input impedance is complex conjugate matched $(Z_{in} = Z_s')$ or in terms of the reflection coefficients, if $\Gamma_{in} = \Gamma_S^*$. Under maximum power transfer condition, the available power P_A as

$$P_A = P_{in}\Big|_{\Gamma_{in} = \Gamma_S^*} = \frac{1}{2} \frac{|b_S|^2}{\left|1 - \Gamma_{in}\Gamma_S\right|^2}\Bigg|_{\Gamma_{in} = \Gamma_S^*} \left(1 - \left|\Gamma_{in}\right|^2\right)$$

$$= \frac{1}{2} \frac{|b_S|^2}{1 - \left|\Gamma_S\right|^2} \quad ...(4)$$

This expression makes clear the dependence on Γ_S. If $\Gamma_{in} = 0$ and $\Gamma_S \neq 0$, it is seen from (2) that $P_{inc} = \frac{|b_S|^2}{2}$.

5.10.2 Transducer Power Gain

It quantifies the gain of the amplifier placed between source and load.

$$G_T = \frac{\text{Power delivered to the load}}{\text{Available power from the source}} = \frac{P_L}{P_A}$$

or with $P_L = \frac{1}{2}|b_2|^2 \cdot \left(1 - \left|\Gamma_L\right|^2\right)$ we obtain

Tamilnadu College Of Engineering

$$G_T = \frac{P_L}{P_A} = \frac{|b_2|^2}{|b_S|^2}(1-|L|^2)\left(1-|\Gamma_S|^2\right) \quad ...(5)$$

In this expression, the ratio b_2/b_S has to be determined, with help of signal flow graph and based on figure we establish

$$b_2 = \frac{S_{21}a_1}{1-S_{22}\Gamma_L} \quad ...(6)$$

$$b_S = \left[1-\left(S_{11}+\frac{S_{21}S_{12}\Gamma_L}{1-S_{22}\Gamma_L}\right)\Gamma_S\right]a_1 \quad ...(7)$$

The required ratio is given by

$$\frac{b_2}{b_S} = \frac{S_{21}}{\left(1-S_{11}\Gamma_S\right)\left(1-S_{22}\Gamma_L\right)-S_{21}S_{12}\Gamma_L\Gamma_S} \quad ...(8)$$

Inserting (8) into (5) results in

$$G_T = \frac{\left(1-|\Gamma_L|^2\right)|S_{21}|^2\left(1-|\Gamma_S|^2\right)}{|\left(1-S_{11}\Gamma_S\right)\left(1-S_{22}\Gamma_L\right)-S_{21}S_{12}\Gamma_L\Gamma_S|^2} \quad ...(9)$$

Which can be rearranged by defining the input and output reflection coefficients

$$\Gamma_{in} = S_{11}+\frac{S_{21}S_{12}\Gamma_L}{1-S_{22}\Gamma_L} \quad ...(10)$$

$$\Gamma_{out} = S_{22}+\frac{S_{12}S_{21}\Gamma_S}{1-S_{11}\Gamma_S} \quad ...(11)$$

With these two definitions two more transducer power gain expressions can be derived. First by incorporating (10) into (9) it is seen that

$$G_T = \frac{(1-|\Gamma_L|^2)|S_{21}|^2(1-|\Gamma_S|^2)}{|1-\Gamma_S\Gamma_{in}|^2\,|1-S_{22}\Gamma_L|^2} \quad ...(12)$$

Second using (11) into (9) results in

$$G_T = \frac{\left(1-|\Gamma_L|^2\right)|S_{21}|^2\left(1-|\Gamma_S|^2\right)}{|1-\Gamma_L\Gamma_{out}|^2\,|1-S_{11}\Gamma_S|^2} \quad ...(13)$$

Tamilnadu College Of Engineering

An often employed approximation for the transducer power gain is so called unilateral power gain G_{TU}, which neglect the feedback effect of the amplifier ($S_{12} = 0$). This simplifies (13) into

$$G_{TU} = \frac{\left(1 - |\Gamma_L|^2\right)|S_{21}|^2\left(1 - |\Gamma_S|^2\right)}{\left|1 - \Gamma_L S_{22}\right|^2 \left|1 - S_{11}\Gamma_S\right|^2} \quad ...(14)$$

5.10.3 Additional Power Relations

The transducer power gain is a fundamental expression from which additional important power relations can be derived. For instance, the available power gain for load side matching $\left(\Gamma_L = \Gamma_{out}^*\right)$ is defined as

$$G_A = G_T\Big|_{\Gamma_L = \Gamma_{out}^*}$$

$$= \frac{\text{Power available from the network}}{\text{Power available from the source}} = \frac{P_N}{P_A}$$

or

$$G_A = \frac{|S_{21}|^2\left(1 - |\Gamma_S|^2\right)}{\left(1 - |\Gamma_{out}|^2\right)\left|1 - S_{11}\Gamma_S\right|^2} \quad ...(15)$$

Further power gain (operating power gain) is defined as the ratio of the power delivered to the load to the power supplied to the amplifier

$$G = \frac{\text{Power deliverd to load}}{\text{Power supplied to the amplifier}}$$

$$= \frac{P_L}{P_{in}} = \frac{P_L}{P_A} \cdot \frac{P_A}{P_{in}} = G_T \frac{P_A}{P_{in}}$$

Combining (3), (4) and (12)

$$G = \frac{\left(1 - |\Gamma_L|^2\right)|S_{21}|^2}{\left(1 - |\Gamma_{in}|^2\right)\left|1 - S_{22}\Gamma_L\right|^2} \quad ...(16)$$

Tamilnadu College Of Engineering

Example: 3

An RF amplifier has the following S-parameters:

$S_{11} = 0.3\angle{-70^o}$, $S_{21} = 3.5\angle{85^o}$, $S_{12} = 0.2\angle{-10^o}$, $S_{22} = 0.4\angle{-45^o}$. *Further more, the amplifier is connected to a voltage source with* $V_s = 5V\angle{0^o}$ *and source impedance* $Z_S = 40\ \Omega$. *The output is utilized to drive an antenna, which has an impedance of* $Z_L = 73\ \Omega$. *Assuming that the S parameters of the amplifier are measured with reference to a* $Z_0 = 50\Omega$.

Find the following quantities.

i) *Transducer gain* G_T

ii) *Unilateral transducer gain* G_{TU}

iii) *Available gain* G_A

iv) *Operating power gain* G

v) *Incident power to the amplifier* P_{inc}

vi) *Available power from the source* P_A

vii) *Power delivered to the load* P_L

☞ ***Solution:***

Source reflection coefficient $\Gamma_S = \dfrac{Z_S - Z_0}{Z_S + Z_0}$

$$= \frac{40 - 50}{40 + 50}$$

$$\Gamma_S = -0.111$$

Load reflection coefficient $\Gamma_L = \dfrac{Z_L - Z_0}{Z_L + Z_0}$

$$= \frac{73 - 50}{73 + 50}$$

$$\Gamma_L = 0.187$$

$$\Gamma_{in} = S_{11} + \frac{S_{21}\,S_{12}\,\Gamma_L}{1 - S_{22}\Gamma_L}$$

$$= 0.146 - j\,0.151$$

Tamilnadu College Of Engineering

$$\Gamma_{out} = S_{22} + \frac{S_{12}\, S_{21}\, \Gamma_S}{1 - S_{11}\, \Gamma_S}$$

$$= 0.265 - j\,0.358$$

i) $$G_T = \frac{\left(1 - |\Gamma_L|^2\right) |S_{21}|^2 \left(1 - |\Gamma_S|^2\right)}{\left|1 - \Gamma_L\, \Gamma_{out}\right|^2 \left|1 - S_{11}\Gamma_S\right|^2} = 12.56 \text{ or } 10.99 \text{ dB}$$

ii) $$G_{TU} = \frac{\left(1 - |\Gamma_L|^2\right) |S_{21}|^2 \left(1 - |\Gamma_S|^2\right)}{\left|1 - \Gamma_L\, S_{22}\right|^2 \left|1 - S_{11}\Gamma_S\right|^2} = 12.67 \text{ or } 11.03 \text{ dB}$$

iii) $$G_A = \frac{|S_{21}|^2 \left(1 - |\Gamma_S|^2\right)}{\left|1 - |\Gamma_{out}|^2\right| \left|1 - S_{11}\Gamma_S\right|^2} = 14.74 \text{ or } 11.68 \text{ dB}$$

iv) $$G = \frac{\left(1 - |\Gamma_L|^2\right) |S_{21}|^2}{\left|1 - |\Gamma_{in}|^2\right| \left|1 - S_{22}\Gamma_L\right|^2} = 13.74 \text{ or } 11.38 \text{ dB}$$

v) $$P_{inc} = \frac{1}{2} \frac{|b_S|^2}{\left|1 - \Gamma_{in}\Gamma_S\right|^2} = \frac{1}{2} \frac{Z_0}{(Z_S + Z_0)} \frac{|V_S|^2}{\left|1 - \Gamma_{in}\Gamma_S\right|^2} = 74.7 \text{ mw}$$

$$P_{inc}(dBm) = 10 \log (P_{inc}/(1 \text{ mw})) = 18.73 \text{ dBm}$$

vi) $$P_A = \frac{1}{2} \frac{|b_S|^2}{1 - |\Gamma_S|^2} = 78.1 \text{mw or } 18.93 \text{ dBm}$$

vi) $$P_L = P_A\, G_T = 981.4 \text{ mw or } 29.92 \text{ dBm}$$

5.11 STABILITY CONSIDERATIONS

5.11.1 Stability Circles

An amplifier circuit must be stable over the entire frequency range. The RF circuit tend to oscillate depending on operating frequency and termination. The phenomenon of oscillation can be understood in the context of voltage wave along a transmission line.

If $|\Gamma| > 1$ then return voltage increases in magnitude possibly causing instability.

If $|\Gamma| < 1$ causes a diminished return voltage wave (negative feedback).

Tamilnadu College Of Engineering

Amplifier as a two port network characterized through its S - parameters. Amplifier is stable, when magnitude of reflection coefficient are less than unity.

$$|\Gamma_L| < 1, \quad |\Gamma_S| < 1 \qquad ...(1)$$

$$|\Gamma_{in}| = \left|\frac{S_{11} - \Gamma_L \Delta}{1 - S_{22}\Gamma_S}\right| < 1 \qquad ...(2)$$

$$|\Gamma_{out}| = \left|\frac{S_{22} - \Gamma_S \Delta}{1 - S_{11}\Gamma_S}\right| < 1 \qquad ...(3)$$

$$\text{where} \quad \Delta = S_{11} S_{22} - S_{12} S_{21} \qquad ...(4)$$

Since S parameters are fixed for a particular frequency, the only factor that have a parametric effect on stability are Γ_L and Γ_S

In terms of amplifier output port, the condition is established for which (2) is satisfied.

To this end, the complex quantities

$$\left.\begin{aligned} S_{22} &= S_{11}^R + j S_{11}^I, & S_{22} &= S_{22}^R + j S_{22}^I \\ \Delta &= \Delta^R + j\Delta^I, & \Gamma_L &= \Gamma_L^R + j\Gamma_L^I \end{aligned}\right\} \qquad ...(5)$$

substituting equation (5) into (2) output stability circle equation is

$$\left(\Gamma_L^R - C_{out}^R\right)^2 + \left(\Gamma_L^I - C_{out}^I\right)^2 = r_{out}^2 \qquad ...(6)$$

where circle radius is given by

$$r_{out} = \frac{|S_{12} S_{21}|}{||S_{22}|^2 - |\Delta|^2|} \qquad ...(7)$$

and center of circle is located at

$$C_{out} = C_{out}^R + j C_{out}^I = \frac{(S_{22} - S_{11}^* \Delta)^*}{|S_{22}|^2 - |\Delta|^2} \qquad ...(8)$$

as depicted in figure 5.22(a) Interms of input port, substituting (5) into (3) yields the input stability circle equation

$$\left(\Gamma_S^R - C_{in}^R\right)^2 + \left(\Gamma_S^I - C_{in}^I\right)^2 = r_{in}^2 \qquad ...(9)$$

Tamilnadu College Of Engineering

where $r_{in} = \dfrac{S_{12}\,S_{21}}{||S_{11}|^2 - |\Delta|^2|}$ ...(10)

and $C_{in} = \dfrac{(S_{11} - S_{22}^{*}\,\Delta)^{*}}{|S_{11}|^2 - |\Delta|^2} = C_{in}^{R} + j\,C_{in}^{I}$ ...(11)

When plotted in Γ_S plane we obtain response as schematically shown in figure 5.22 (b).

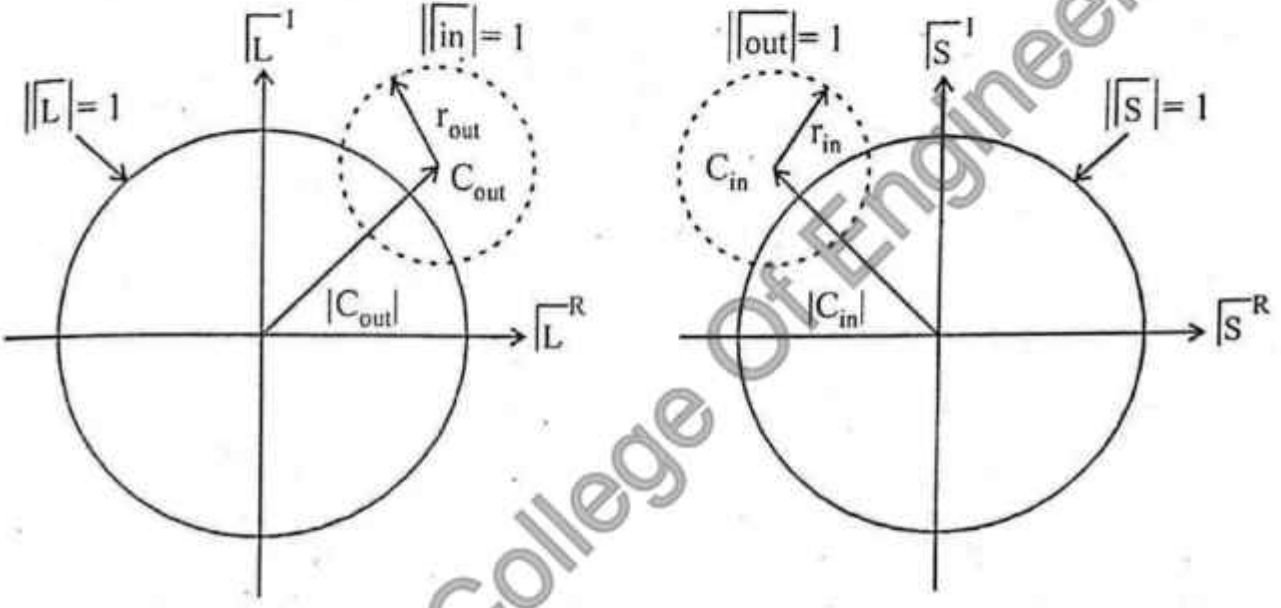

(a) output stability circle (b) Input stability circle

Figure 5.22 Stability circle $|\Gamma_{in}| = 1$ in the complex Γ_L – plane and stability circle $|\Gamma_{out}| = 1$ in the complex Γ_S – plane

5.11.2 Unconditional Stability

Unconditional stability refers to the situation where the amplifier remains stable for any passive source and load at the selected frequency and bias conditions.

For $|S_{11}| < 1$ and $|S_{22}| < 1$, it is stated as

$$||C_{in}| - r_{in}| > 1 \quad ...(12)$$

$$||C_{out}| - r_{out}| > 1 \quad ...(13)$$

In other words, the stability circles have to reside completely outside the $|\Gamma_S| = 1$ and $|\Gamma_L| = 1$ circles.

Tamilnadu College Of Engineering

The condition for stability is expressed in terms of stability factor K as

$$K = \frac{1 - |S_{11}|^2 - |S_{22}|^2 + |\Delta|^2}{2|S_{12}||S_{21}|} > 1 \qquad ...(14)$$

The stability factor K is also referred as Rollet factor.

It applies for both input and output ports.

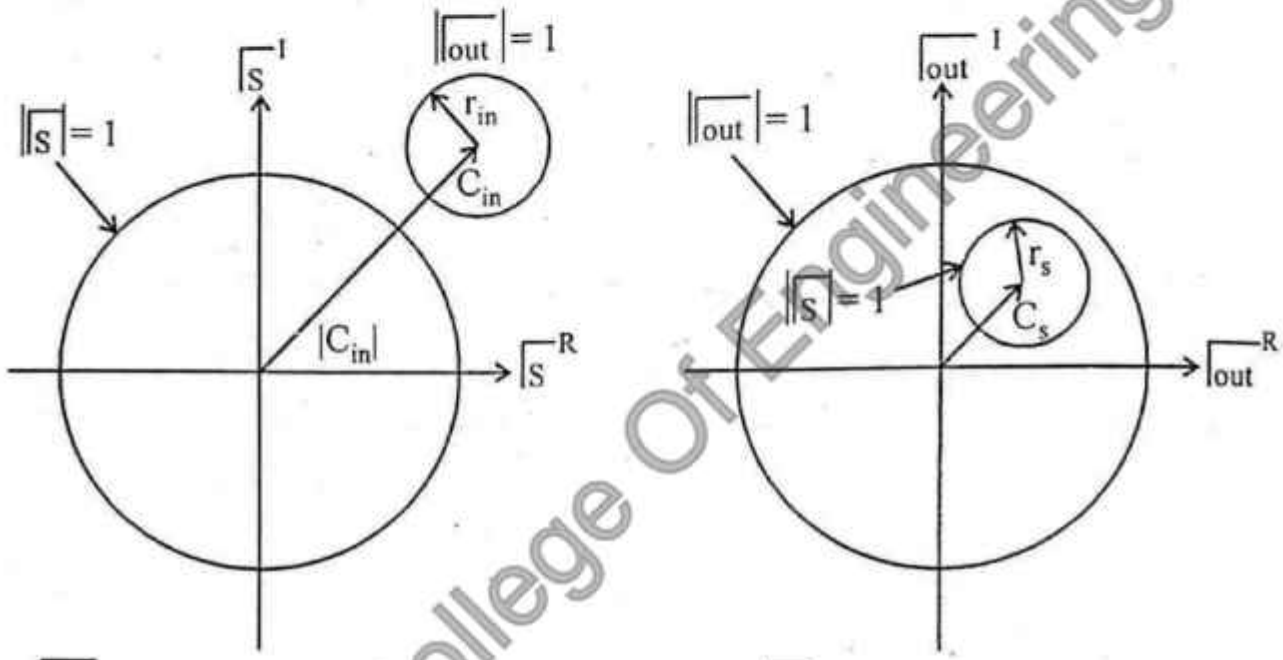

(a) $|\Gamma_{out}| = 1$ circle must reside outside (b) $|\Gamma_S| = 1$ circle must reside inside

Figure 5.23 Unconditional stability in the Γ_S and Γ_{out} planes for $|S_{11}| < 1$

5.11.3 Stabilization Methods

If the operation of a FET or BJT is found to be unstable, an attempt can be made to stabilize the transistor. The conditions $|\Gamma_{in}| > 1$ and $|\Gamma_{out}| > 1$ can be written in terms of input and output impedances.

$$|\Gamma_{in}| = \left|\frac{Z_{in} - Z_o}{Z_{in} + Z_o}\right| > 1 \quad |\Gamma_{out}| = \left|\frac{Z_{out} - Z_o}{Z_{out} + Z_o}\right| > 1$$

Which imply $Re(Z_{in}) < 0$ and $Re(Z_{out}) < 0$. One way to stabilize the active device is to add a series resistance or a shunt conductance to port.

Figure 5.24 shows the configuration for the input port. This loading in conjunction with $Re(Z_S)$ must compensate the negative contribution of $Re(Z_{in})$. Thus we require

Tamilnadu College Of Engineering

$$\text{Re}\,(Z_{in} + R'_{in} + Z_S) > 0 \text{ (or)}$$

$$\text{Re}\,(Y_{in} + G'_{in} + Y_S) > 0$$

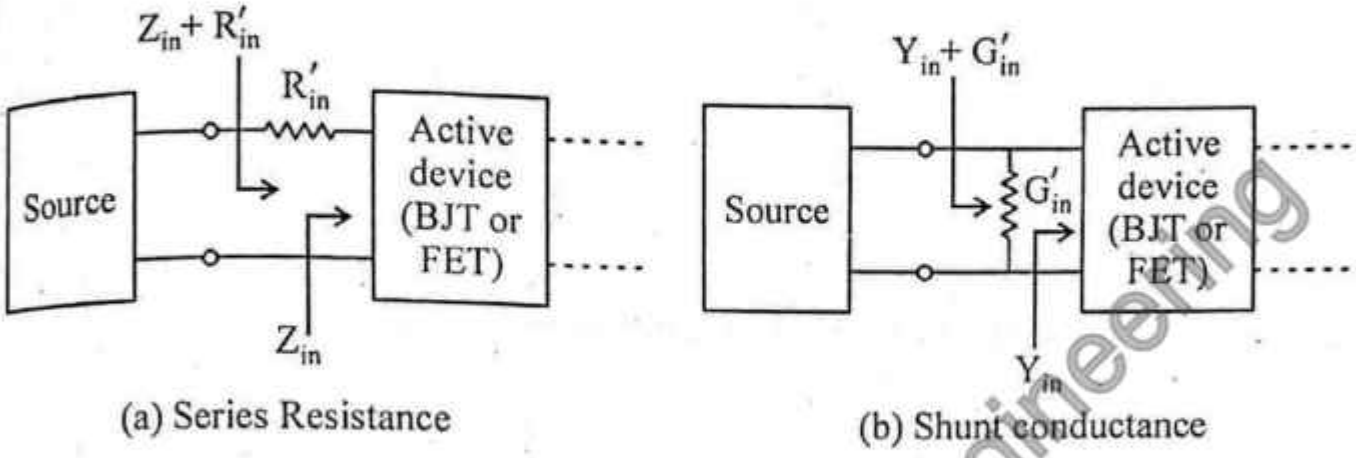

(a) Series Resistance (b) Shunt conductance

Figure 5.24 Stabilization of input port through series resistance or shunt conductance

Figure 5.25 shows the stabilization of the output port. The corresponding condition is

$$\text{Re}\,(Z_{out} + R'_{out} + Z_L) > 0 \text{ (or)}$$

$$\text{Re}\,(Y_{out} + G'_{out} + Y_L) > 0$$

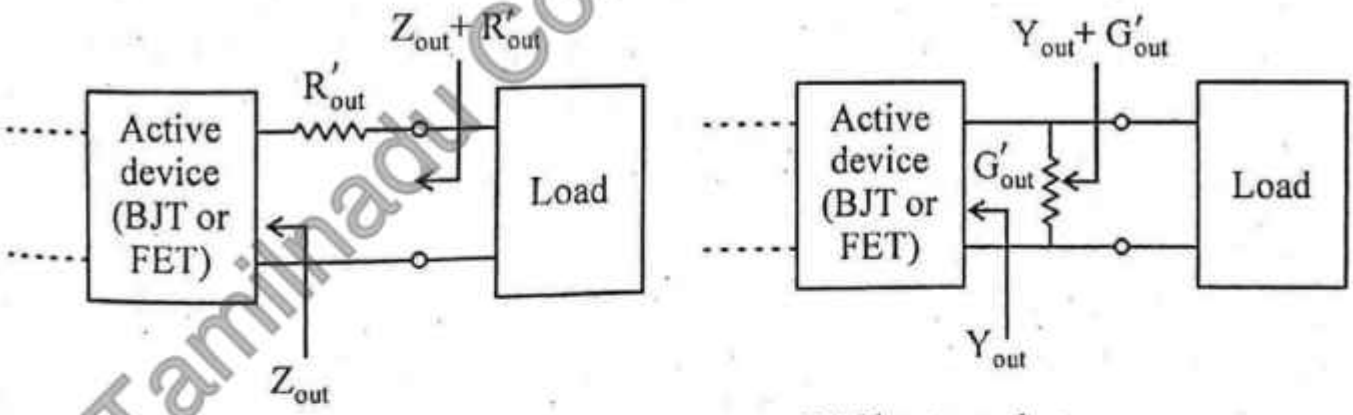

(a) Series resistance (b) Shunt conductance

Figure 5.25 Stabilization of output port through series resistance or shunt conductance

Example: 4

A MESFET operated at 5.7 GHz has following S parameters. $S_{11} = 0.5 \angle -60^o$, $S_{12} = 0.02 \angle 0^o$, $S_{21} = 6.5 \angle 115^o$, $S_{22} = 0.6 \angle -35^o$. Verify the circuit whether it is unconditionally stable or not?

Tamilnadu College Of Engineering

☞ ***Solution:***

$$K = \frac{1 - |S_{11}|^2 - |S_{22}|^2 + |\Delta|^2}{2\,|S_{12}|\,|S_{21}|}$$

$$K = 2.17$$

$$|\Delta| = |S_{11}\,S_{22} - S_{12}\,S_{21}|$$

$$|\Delta| = 0.42$$

$K > 1$ and $|\Delta| < 1$ so the transistor is unconditionally stable.

Tamilnadu College Of Engineering

TWO MARK QUESTIONS AND ANSWERS

1. *Define transmission line.*

A transmission line is a distributed parameter network and is described by parameters distributed throughout its length. It means to convey electrical signals between two points separated in distance.

2. *What are the different types of transmission lines?*

i) Open wire line

ii) Cables

iii) Coaxial line

3. *What are the primary and secondary constants of a transmission line ?*

The four primary constants are

i) Resistance (R)

ii) Inductance (L)

iii) Capacitance (C)

iv) Conductance (G)

The two secondary constants are

(i) Characteristic impedance (Z_0)

(ii) Propagation constant (γ)

4. *Define characteristic impedance of a transmission line.*

It is defined as the input impedance of a symmetrical network when its terminating impedance equals Z_0. Characteristic impedance of a uniform transmission line is defined as the ratio of the voltage to current at the input of an infinite line.

5. *Define propagation constant.*

Propagation constant is defined as the natural logarithmic ratio of the sending end current to the receiving end current.

$$\gamma = ln\left(\frac{I_s}{I_R}\right)$$

Tamilnadu College Of Engineering

6. *What is called an infinite line (or) smooth line?*

When a finite line is terminated by its characteristic impedance it behaves as an infinite line and that input impedance is equal to its characteristic impedance.

7. *What do you understand by loading of transmission line?*

To achieve distortionless condition in transmission line, inductance (L)has to be increased.. Increasing the value by inserting inductances in series with line is termed as loading and such lines are called loaded lines.

8. *State the condition for distortionless line.*

The condition for a distortionless line is LG = RC.

9. *Name the two types of waveform distortions.*

(i) Frequency distortion

(ii) Delay distortion

10. *List the different methods of loading.*

(i) Lumped loading

(ii) Continuous loading

(iii) Patch loading

11. *How can distortion is reduced in a transmission line?*

Frequency distortion is reduced by the use of equalizers. Delay distortion is reduced by the use of coaxial cable.

12. *Define wavelength and velocity of propagation.*

The distance wave travels along the line while the phase angle is changing through 2π radians is called a wavelength. That is $\lambda = \frac{2\pi}{\beta}$.

Velocity of propagation is defined as the ratio of angular frequency to the phase shift constant. That is $v = \frac{\omega}{\beta}$.

Tamilnadu College Of Engineering

13. *Define waveform distortion.*

If the received waveform on a transmission line is not identical with the input waveform at the sending end, it is called waveform distortion. This is due to the fact that all frequencies applied on the transm ission line are not equally attenuated and are not delayed equally.

14. *What is patch loading?*

Sometimes cables are arranged in a section followed by a loaded line. That is known as patch loading.

15. *Define transfer impedance.*

Transfer impedance is defined as the ratio of sending end voltage to the receiving current.

$$Z_T = \frac{E_s}{I_R}$$

16. *What is lumped loading?*

In this type of loading, the inductors are introduced in lumps of uniform distance in the line. This is otherwise known as inductive loading.

17. *Define attenuation constant and phase constant.*

The attenuation constant (α) indicates the rate at which the signal gets attenuated along the line. The phase constant (β) indicates the rate at which phase of the signal gets changed along the line.

18. *Compare coaxial lines and open wire line.*

Coaxial lines	Open wire line
i) Dielectric loss is increased as frequency is increased.	i) Dielectric loss is small
ii) Unbalanced line with respect to earth.	ii) Balanced line with respect to earth.
iii)Radiation loss is eliminated	iii)High radiation loss
iv)High cost	iv)Low cost

Tamilnadu College Of Engineering

19. What are lumped parameters and distributed parameters?

An electrical network fabricated by interconnecting circuit elements are termed as lumped networks. A transmission line which has the electrical parameters R, L, G, and C uniformly distributed over the entire length of the line is called a distributed network.

20. Define reflection coefficient.

Reflection coefficient is defined as the ratio of reflected voltage or current to the incident voltage or current and is denoted by K.

$$K = \frac{\text{Reflected voltage at load}}{\text{Incident voltage at load}} = \frac{Z_R - Z_o}{Z_R + Z_o}$$

21. Define reflection factor.

Reflection factor (k) is the ratio which indicates change in current in the load due to reflection at the current in the load due to reflection at the mismatched condition.

$$k = \left|\frac{2\sqrt{Z_1 Z_2}}{Z_1 + Z_2}\right|$$

22. Define reflection loss.

The reflection loss is defined as the number of nepers or decibels by which the current in the load under image matched conditions would exceed the current actually flowing in the load. Thus the reflection loss involves the reciprocal of k.

$$\textit{Reflection loss, nepers} = \ln \left|\frac{Z_1 + Z_2}{2\sqrt{Z_1 Z_2}}\right|$$

$$\textit{Reflection loss, db} = 20 \log \left|\frac{Z_1 + Z_2}{2\sqrt{Z_1 Z_2}}\right|$$

Tamilnadu College Of Engineering

23. State the properties of the infinite line.

i. As the line has an infinite line, no wave will even reach the receiving end and hence there is no possibility of the reflection at the receiving end. Thus the complete power applied at the sending end is absorbed by the line.

ii. As the reflected waves are absent the characteristic impedance Z_0 at the sending end will decide the current flowing, when a voltage is applied to the sending end. The current will not be affected by the terminating impedance Z_R at the receiving end.

24. Write a note on telephone cable.

The ordinary telephone cable is an underground cable which consists of wires insulated with paper and twisted in pair. For audio frequency range, the inductance L and the conductance G of such a cable is negligiblily small and hence can be neglected.

25. What is continuous loading?

Continuous loading is the process of adding inductance by distributing in uniformly along the line. This is accomplished in submarine cables by winding it with a high permeability steel tape such as permalloy.

26. What are the advantages of continuous loading?

i. The attenuation is independent of frequency and it is same for all frequencies.

ii. The value of A can be reduced by increasing L provided R is not increased greatly.

iii. The increase in the inductance upto 100 mH per unit length of the line is possible.

Tamilnadu College Of Engineering

27. What are the disadvantages of continuous loading?

i. This method is very expensive. The existing lines cannot be modified by this method.

ii. Extreme precision care should be taken while manufacturing continuous loaded cable. Otherwise it becomes irregular.

iii. For an AC signal there will be large eddy current and hysterisis loss.

28. Write the Campbell's equation.

$$\cos h\, N\gamma' = \frac{Z_c}{2Z_0} \sin h\, N\gamma + \cosh N\gamma$$

Where N is the number of miles between the loading coils

γ' is the propagation constant for the loaded line

Z_c is the inductance of the loaded coil.

29. What are the advantages of lumped loading?

i. There is no practical limit to the value by which the inductance can be increased.

ii. The cost involved is small.

iii. With this method, the existing lines can be tackled and modified.

iv. Hysteresis and eddy current losses are small.

30. What are the disadvantages of lumped loading?

i. After particular frequency the line acts as a low pass filter and above the cut off frequency the attenuation increases.

ii. The cut off frequency must be the top of voice frequency. Hence fractional loading must be used.

iii. Care must be taken while installing the lumped inductors so as to maintain the exact balancing of the circuit.

Tamilnadu College Of Engineering

31. Define group velocity.

The velocity which is produced by a group of frequency traveling along the system is called group velocity. It is defined as

$$v_g = \frac{d\omega}{d\beta}$$

32. What is finite line? Write down the significance of this line.

A finite line is a line having a finite length on the line. It is a line, which is terminated in its characteristic impedance $Z_R = Z_0$, so the input impedance of the finite linei s equal to the characteristic impedance $Z_S = Z_0$.

33. What is impedance matching?

If the load impedance is not equal to the source impedance, then all the power that is transmitted from the source will not reach the load end and hence some power is watsed. This is called impedance mismatch condition. So for proper maximum power transfer, the impedance in sending and receiving end are matched. This is called impedance matching.

34. When reflection occurs in a line.

i. When the load end is open circuited

ii. When the load end is short circuited

iii. When the line is not terminated in its characteristic impedance, the load will absorb some power and some will be reflected back thus producing reflections.

35. State the disadvantage of reflection.

i. Reflected wave appears as echo at the sending end.

ii. The efficiency is reduced.

iii. The output reduces as load rejects part of the energy.

iv. If generator impedance is not Z_0 then reflected wave is again reflected at sending end as now incident wave. This continuous back and forth till all the energy is dissipated as the losses.

Tamilnadu College Of Engineering

36. Given the current and voltage equation of infinite line.

$$I_R = I_s e^{-\gamma l}$$

$$E_R = E_s e^{-\gamma l}$$

Where I_R and E_R is the current and voltage at a distance of unit lengths down the line respectively. I_S and E_S is the sending end current and voltage respectively.

37. How are practical lines made appear as infinite line?

A finite line terminated in a load equivalent to the characteristic impedance appears at the sending end as an infinite line.

38. When will a transmission line deliver maximum power to a load?

A transmission line will deliver maximum power to a load when the load resistance is equal to the characteristic resistance.

39. Draw the equivalent circuit of a transmission line.

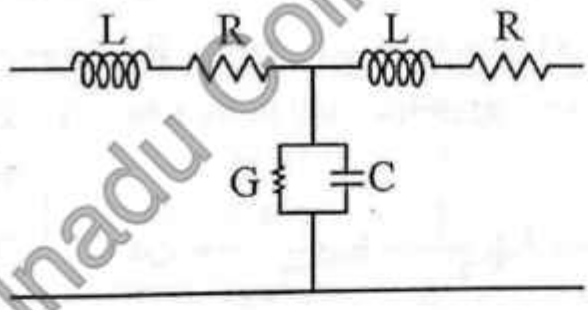

40. State the cause of reflection.

Energy is transfered along the wave through electric field and magnetic field. When the line is terminated in Z_0, electric field energy and magnetic field energy are equal. But when line is not terminated in Z_0 redistribution of these energies takesplace. This redistribution is the main cause of reflection.

41. What is important of cut off frequency in lumped loading?

In lumped loading the lines behaves like low pass filter upto cut off frequency and it behaves properly. Once cut off frequency is crossed α increases rapidly. Hence cut off frequency must be designed as high as possible.

Tamilnadu College Of Engineering

42. State the disadvantages of the parallel open wire line.

i. Exposed to atmosphere so affected by atmospheric conditions.

ii. Need towers and posts to install.

iii. Initial cost is high.

iv. Short circuit chances due to flying objects.

43. Write the relationship between Z_0 and γ interms of Z_{oc} and Z_{sc}.

$$Z_0 = \sqrt{Z_{oc} Z_{sc}}$$

$$\gamma = \tan h^{-1} \sqrt{\frac{Z_{sc}}{Z_{oc}}}$$

44. Define the term insertion loss.

The insertion loss of a line or network is defined as the number of nepers or decibels by which the current in the load is changed by the insertion.

$$\text{Insertion less} = \frac{\text{Current flowing in the load without insertion of the network}}{\text{Current flowing in the load with insertion of the network}}$$

$$\text{Insertion less} = 20\left[\log\frac{1}{K_s} + \log\frac{1}{K_R} - \log\frac{1}{K_{SR}} + 0.4343\right] db$$

Where K_S, K_R and K_{SR} are reflection factors.

45. Given the equation for input impedance interms of Z_0 and K

$$Z_s = Z_0\left[\frac{e^{\gamma l} + K e^{-\gamma l}}{e^{\gamma l} - K e^{-\gamma l}}\right]$$

46. Given the equation for voltage and current at any point an the transmission line.

$$E = E_R \cos h\,\gamma s + I_R Z_0 \sin h\,\gamma s$$

$$I = I_R \cos h\,\gamma s + \frac{E_R}{Z_0} \sin h\,\gamma s$$

Tamilnadu College Of Engineering

47. The open circuit and short circuit impedance of a transmission line at 1500 Hz are $800\angle -30^\circ\ \Omega$ and $400\angle -10^\circ\ \Omega$ respectively, calculate its propagation constant.

$$\gamma = \tan h^{-1}\sqrt{\frac{Z_{sc}}{Z_{0c}}}$$

$$= \tan h^{-1}\sqrt{\frac{400\angle -10^\circ}{800\angle -30^\circ}}$$

$$= \tan h^{-1}\sqrt{0.5\angle 20^\circ}$$

48. How to avoid the distortion that occurs in the line?

i. The attenuation constant α should be made independent of frequency.

ii. The phase constant β should be made dependent of frequency.

iii. The velocity of propagation is indepentent of frequency.

49. Define return loss.

It is defined as the ratio of the power at receiving end due to incident wave to the power reflected by the load.

$$\text{Return loss} = 10\log\frac{P_1}{P_3}\ db$$

50. What are Equalizers?

Equalizers are networks whose frequency and phase characteristic are adjusted to be inverse to those that of lines, resulting in an overall uniform frequency response over the desired frequency band.

Tamilnadu College Of Engineering

51. Prove that 1 neper = 8.686 db.

Let x is to be represented in neper and db then,

$$\text{neper} = ln\, x$$

$$db = 20 \log x$$

Since

$$ln\, x = 2.3025 \log x$$

$$\log x = \frac{1}{2.3025} ln\, x$$

$$20 \log x = \frac{20}{2.3025} ln\, x$$

$$db = 8.686 \text{ neper}$$

Therefore 1 neper = 8.686 db.

Tamilnadu College Of Engineering

FORMULAS

Transmission line constants

$$Z = R + j\omega L$$

$$Y = G + j\omega C$$

$$Z_o = \sqrt{\frac{Z}{Y}} = \sqrt{\frac{R + j\omega L}{G + j\omega C}}$$

$$\gamma = \sqrt{ZY} = \sqrt{(R + j\omega L)(G + j\omega C)} = ln\left(\frac{I_S}{I_R}\right)$$

Transmission line-General solution

$$E = \frac{E_R}{2}\left[\left(1 + \frac{Z_o}{Z_R}\right)e^{\sqrt{YZ}s} + \left(1 - \frac{Z_o}{Z_R}\right)e^{-\sqrt{YZ}s}\right]$$

$$I = \frac{I_R}{2}\left[\left(1 + \frac{Z_R}{Z_o}\right)e^{\sqrt{ZY}s} + \left(1 - \frac{Z_R}{Z_o}\right)e^{-\sqrt{ZY}s}\right]$$

or

$$E = \frac{E_R(Z_R + Z_o)}{2Z_R}\left[e^{\sqrt{ZY}s} + \left(\frac{Z_R - Z_o}{Z_R + Z_o}\right)e^{-\sqrt{ZY}s}\right]$$

$$I = \frac{I_R(Z_R + Z_o)}{2Z_o}\left[e^{\sqrt{ZY}s} + \left(\frac{Z_R - Z_o}{Z_R + Z_o}\right)e^{-\sqrt{ZY}s}\right]$$

or

$$E = E_R \cosh\sqrt{ZY}s + I_R Z_o \sinh\sqrt{ZY}s$$

$$I = I_R \cosh\sqrt{ZY}s + \frac{E_R}{Z_o}\sinh\sqrt{ZY}s$$

$$Z_s = \frac{E_s}{I_s} = Z_o\left(\frac{Z_R \cosh\gamma l + Z_o \sinh\gamma l}{Z_o \cosh\gamma l + Z_R \sinh\gamma l}\right)$$

or

Tamilnadu College Of Engineering

$$Z_s = \frac{E_s}{I_s} = Z_o\left[\frac{e^{\gamma l} + \left(\frac{Z_R - Z_o}{Z_R + Z_o}\right)e^{-\gamma l}}{e^{\gamma l} - \left(\frac{Z_R - Z_o}{Z_R + Z_o}\right)e^{-\gamma l}}\right]$$

Infinite line

$$Z_s = Z_o = Z_R$$

$$E_R = E_s\, e^{-\gamma l}$$

$$I_R = I_s\, e^{-\gamma l}$$

Wavelength and velocity of propagation

$$\lambda = \frac{2\pi}{\beta}$$

$$v = \lambda f = \frac{\omega}{\beta}$$

$$\alpha = \sqrt{\frac{RG - \omega^2 LC + \sqrt{(RG - \omega^2 LC)^2 + \omega^2 (LG + CR)^2}}{2}}$$

$$\beta = \sqrt{\frac{\omega^2 LC - RG + \sqrt{(RG - \omega^2 LC)^2 + \omega^2 (LG + CR)^2}}{2}}$$

Perfect line

$$R = G = 0$$

$$\alpha = 0$$

$$\beta = \omega\sqrt{LC}$$

Distortionless line

$$LG = CR \text{ (or) } \frac{L}{C} = \frac{R}{G}$$

$$\alpha = \sqrt{RG}$$

$$\beta = \omega\sqrt{LC}$$

$$v = \frac{1}{\sqrt{LC}}$$

Tamilnadu College Of Engineering

Telephone cable

$$\alpha = \beta = \sqrt{\frac{\omega CR}{2}}$$

$$v = \sqrt{\frac{2\omega}{CR}}$$

Loading of Telephone cables

$$Z_o = \sqrt{\frac{L}{C}}$$

$$\alpha = \frac{R}{2}\sqrt{\frac{C}{L}}$$

$$\beta = \omega\sqrt{LC}$$

$$v = \frac{1}{\sqrt{LC}}$$

Campbell's equation

$$\cosh N\gamma' = \frac{Z_c}{2Z_o}\sinh N\gamma + \cosh N\gamma$$

Reflection coefficient

$$K = \frac{Z_R - Z_o}{Z_R + Z_o}$$

Input and transfer impedance

$$Z_s = \frac{E_s}{I_s} = Z_0\left(\frac{e^{\gamma l} + K e^{-\gamma l}}{e^{\gamma l} - K e^{-\gamma l}}\right)$$

$$Z_T = \frac{E_s}{I_R} = \frac{Z_R + Z_o}{2}(e^{\gamma l} + K e^{-\gamma l})$$

or

$$Z_T = \frac{E_s}{I_R} = Z_R \cosh \gamma l + Z_0 \sinh \gamma l$$

Tamilnadu College Of Engineering

Open and short circuited lines

$Z_R = 0$ (short circuit)

$Z_{sc} = Z_0 \tanh \gamma l$

$Z_R = \infty$ (open circuit)

$Z_{oc} = Z_o \coth \gamma l$

$Z_o = \sqrt{Z_{sc} Z_{oc}}$

$$\tanh \gamma l = \sqrt{\frac{Z_{sc}}{Z_{oc}}}$$

Reflection factor $k = \left|\frac{2\sqrt{Z_1 Z_2}}{Z_1 + Z_2}\right|$

Reflection Loss $= \frac{1}{k} = ln \left|\frac{Z_1 + Z_2}{2\sqrt{Z_1 Z_2}}\right|$ nepers $= 20 \, log \left|\frac{Z_1 + Z_2}{2\sqrt{Z_1 Z_2}}\right| \, db$

Tamilnadu College Of Engineering

TWO MARK QUESTIONS AND ANSWERS

1. List the assumptions made while analysing a transmission line at radio frequencies.

i) Very considerable skin effect, so that currents may be assumed as flowing on conductor surfaces, internal inductance then being zero.

ii) $\omega L >> R$.

iii) $G = 0$.

2. What is dissipationless line?

In applications where losses may be neglected, as in transmission of power at high efficiency the resistance R may be considered as negligible and the line as one of zero dissipation or dissipationless line.

3. What is the condition to have zero dissipation for a line ?

The condition for a zero dissipation line is $R = G = 0$.

4. What are the advantages of line at zero dissipation?

i) Efficiency is high.

ii) Losses are negligible.

5. Write down the primary and secondary constants for the line of zero dissipation.

Primary constants are $R = G = 0$, L and C

Secondary constants are $Z_0 = \sqrt{\frac{L}{C}}$

$$\gamma = j\omega\sqrt{LC}, \alpha = 0 \text{ and } \beta = \omega\sqrt{LC}$$

Tamilnadu College Of Engineering

6. What are the standing waves?

When a high frequency transmission line is not correctly terminated, the traveling electromagnetic wave from the generator at the sending end is reflected completely or partially at the termination. The combination of incident and reflected waves gives rise to standing waves of definite maxima and minima of current and voltage along the line.

7. Define node and antinode.

The point at which zero voltage or current is obtained in a standing wave is called the node. The point at which maximum voltage or current is obtained is known as antinode.

8. Define standing wave ratio.

The ratio of maximum to minimum magnitudes of current or voltage on a line having standing waves is called the standing wave ratio.

$$S = \left|\frac{E_{max}}{E_{min}}\right| = \left|\frac{I_{max}}{I_{min}}\right|$$

9. Express standing wave ratio in terms of a reflection coefficient.

$$S = \frac{1+|K|}{1-|K|}$$

10. Write the expression for input impedance of RF line.

$$Z_s = \frac{E_s}{I_s} = R_o\left[\frac{Z_R + jR_o \tan\beta s}{R_o + jZ_R \tan\beta s}\right]$$

or

$$Z_s = \frac{E_s}{I_s} = R_o\left[\frac{1+|K|\angle\phi - 2\beta s}{1-|K|\angle\phi - 2\beta s}\right]$$

11. Define surge impedance.

When a dc source is suddenly switched on to an open circuited line the dc source does not know that the line is of finite length and hence sees are an input impedance Z_o. Hence this impedance is referred to as a surge impedance.

Tamilnadu College Of Engineering

12. Draw the variation of input impedance of dissipationless line as a function of length for (a) short circuit (b) open circuit.

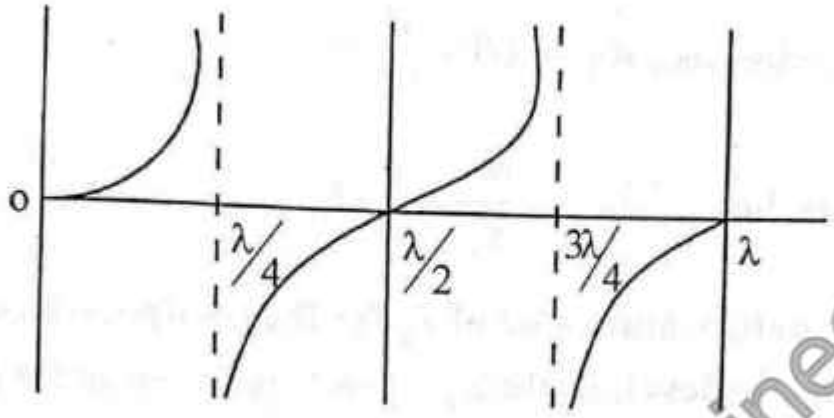

(a) Short circuit

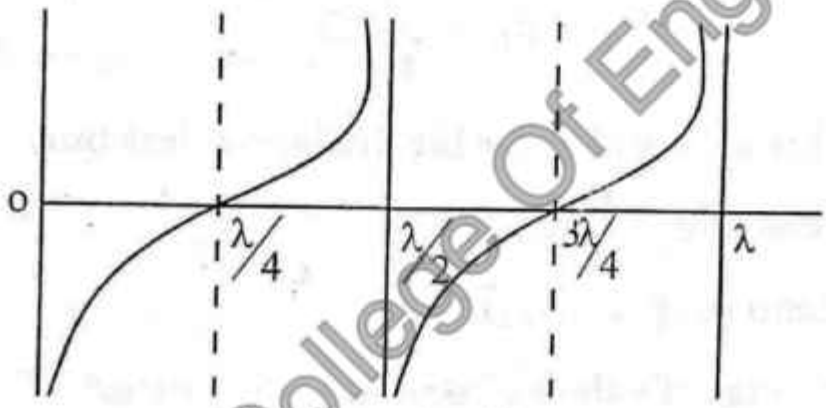

(b) Open circuit

13. State the expression for inductance of a open wire line and coaxial line.

Open wire line, $L = \frac{\mu_0}{2\pi} ln \frac{d}{a}$ H/ m

Coaxial line, $L = \frac{\mu}{2\pi} ln \frac{b}{a}$ H/ m

14. State the expression for capacitance of a open wire line and coaxial line.

Open wire line, $C = \frac{\pi\varepsilon}{ln \frac{d}{a}}$ F/ m

Coaxial line, $C = \frac{2\pi\varepsilon}{ln \frac{b}{a}}$ F/ m

Tamilnadu College Of Engineering

15. State the expression for characteristic impedance of an open wire line and coaxial cable.

Open wire line, $R_0 = 120 \ln \frac{d}{a} \ \Omega$

Coaxial line, $R_0 = \frac{60}{\sqrt{\varepsilon_r}} \ln \frac{b}{a} \Omega$

16. What is the nature and value of Z_0 for the dissipationless line?

For the dissipationless line, the Z_0 is purely resistive and is given by,

$$Z_0 = R_0 = \sqrt{\frac{L}{C}} \ \Omega$$

17. State the value of α and β for the dissipationless line.

Attenuation constant, $\alpha = 0$

Phase shift constant, $\beta = \omega\sqrt{LC}$

18. What is the range of values of standing wave ratio?

The range of values of standing wave ratio is theoretically 1 to infinity.

19. How will you make standing wave measurements on coaxial lines?

For coaxial lines it is necessary to use a length of line in which a longitudinal slot, one half wavelength or more long has been cut. A wire probe is inserted into the air dielectric of the line as a pickup device, a vaccum tube voltmeter or other detector being connected between probe and sheath as an indicator. If the meter provides linear indications, standing wave ratio is readily determined. If the indicator is non linear, corrections must be applied to the readings obtained.

20. Give the maximum and minimum input impedance of the dissipationless line.

Maximum input impedance is given by.

$$R_{max} = R_0 \left[\frac{1+|K|}{1-|K|}\right] = SR_0 \ \Omega$$

Tamilnadu College Of Engineering

Minimum input impedance is given by,

$$R_{min} = R_0\left[\frac{1-|K|}{1+|K|}\right] = \frac{R_0}{S}\Omega$$

21. Give the input impedance of open and short circuited lines.

$$Z_{oc} = \frac{-jR_0}{\tan\beta s} = -jR_0\cot\left(\frac{2\pi s}{\lambda}\right)\Omega$$

$$Z_{sc} = jR_0\tan\beta s = jR_0\tan\left(\frac{2\pi s}{\lambda}\right)\Omega$$

22. Distinguish clearly between open and short circuited line.

A short circuited line means having zero receiving end voltage and zero impedance. That is

$$Z_R = 0 \text{ and } E_R = 0$$

An open circuited line means having infinite receiving end voltage and infinite impedance. That is

$$Z_R = \infty \text{ and } E_R = \infty$$

23. Why the point of voltage minimum is measured rather than voltage maximum?

The point of a voltage minimum is measured rather than a voltage maximum because it is usually possible to determine the exact point of minimum voltage with greater accuracy.

24. What is small dissipation?

When R is small compared with ωL, then such a line is called as small dissipation line. In the applications where line is considered as a circuit element or properties of resonance are involved, this concept of small dissipation line is very much small.

Tamilnadu College Of Engineering

25. Define skin effect.

At very high frequency, skin effect is considerable. Skin effect is defined as the effect in which the current may flow on the surface of the conductor. Now the internal inductance of conductor becomes zero.

26. Differentiate line at radio and power frequencies.

The power transmission lines are electrically short in length not exceeding $\frac{1}{10}$ power efficiency of power transmission lines is high as compared to other sources. The design considerations are simple for power transmission system as frequency of operation is fixed either 50 Hz or 60 Hz.

27. What is the use of tapered line section?

The tapered line section are useful in making transistions between lines and configuration in long lines without appreciable reflections.

28. Bring out the significance of a half wavelength line.

A half wavelength line may be considered as a one to one transformer. It has its greatest utility in connecting load to a source in case where the load and source cannot be made adjacent.

29. State the application of half line.

The expression for the input impedance of the line is given by $Z_S = Z_R$. Thus the line repeats its terminating impedance. Hence it is operated as one to one transformer its application is to connect load to ∞ source where they cannot made adjacent.

30. State the expression for voltage and current on a dissipationless line.

The expression for voltage and current on a dissipationless line is given by

$$E = E_R \cos \beta s + j I_R R_0 \sin \beta s \text{ V}$$

$$I = I_R \cos \beta s + j \frac{E_R}{R_0} \sin \beta s \text{ A}$$

Tamilnadu College Of Engineering

31. Define real power and reactive power.

The real power is expressed in Watts or kW. That is

$$P = VI\cos\theta$$

The reactive power is expressed in VAR or k VAR. That is

$$P = VI\sin\theta$$

32. Write the expression for minimum and maximum distance at resistive input impedance.

The minimum distance of input impedance is given by

$$s = \frac{\phi}{2\beta}$$

The maximum distance of input impedance is given by

$$s = \frac{\phi + \pi}{2\beta}$$

33. Write the expression for input impedance with open circuited, short circuited and matched load for dissipationless line.

For short circuited load ($Z_R = 0$)

$$Z_{sc} = jR_0 \tan\beta s$$

For open circuited load ($Z_R = \infty$)

$$Z_{oc} = -jR_0 \cot\beta s$$

For matched load ($Z_R = Z_0$)

$$Z_S = Z_0$$

Tamilnadu College Of Engineering

FORMULAS

Line at Radio Frequencies

$G = 0$, $\omega L >> R$ and internal inductance is zero due to skin effect.

Open wire line at High Frequencies

$$L = \frac{\mu_0}{2\pi} \ln \frac{d}{a}$$

$$C = \frac{\pi\varepsilon}{\ln \frac{d}{a}}$$

Coaxial Line at High Frequencies

$$L = \frac{\mu}{2\pi} \ln \frac{b}{a}$$

$$C = \frac{2\pi\varepsilon}{\ln \frac{b}{a}}$$

Dissipationless or zero Dissipation Line

$$R = G = 0$$

$$Z_o = R_o = \sqrt{\frac{L}{C}}$$

$$\gamma = j\omega\sqrt{LC},\ \alpha = 0 \text{ and } \beta = \omega\sqrt{LC}$$

$$v = \frac{1}{\sqrt{LC}}$$

Voltage and current on the Dissipationless line

$$E = \frac{E_R(Z_R + R_o)}{2Z_R}\left(e^{j\beta s} + Ke^{-j\beta s}\right)$$

$$I = \frac{I_R(Z_R + R_o)}{2R_o}\left(e^{j\beta s} - Ke^{-j\beta s}\right)$$

$$E = E_R \cos\beta s + jI_R R_o \sin\beta s$$

$$I = I_R \cos\beta s + j\frac{E_R}{R_o}\sin\beta s$$

Tamilnadu College Of Engineering

Standing wave Ratio and Reflection Coefficient

$$S = \left|\frac{E_{max}}{E_{min}}\right| = \left|\frac{I_{max}}{I_{min}}\right| = \frac{1+|K|}{1-|K|}$$

$$|K| = \frac{S-1}{S+1} = \frac{|E_{max}| - |E_{min}|}{|E_{max}| + |E_{min}|}$$

Input Impedance of Dissipationless line, Open and short circuited Lines

$$Z_s = \frac{E_s}{I_s} = R_o\left(\frac{Z_R + jR_o \tan\beta s}{R_o + jZ_R \tan\beta s}\right)$$

$$Z_s = \frac{E_s}{I_s} = R_o\left(\frac{1+|K|\angle\phi - 2\beta s}{1-|K|\angle\phi - 2\beta s}\right)$$

$$Z_{sc} = jR_0 \tan\beta s \text{ and } Z_R = 0$$

$$Z_{oc} = -jR_0 \cot\beta s \text{ and } Z_R = \infty$$

$$R_0 = \sqrt{Z_{sc} Z_{oc}}$$

Power and impedance Measurement on Line

$$P = (|I_{max}|\,|I_{min}|)\,R_0 = \frac{|E_{max}|\,|E_{min}|}{R_o}$$

$$\frac{E_{max}}{I_{max}} = \frac{E_{min}}{I_{min}} = R_o, \quad \frac{E_{max}}{I_{min}} = R_{max} \text{ and } \frac{E_{min}}{I_{max}} = R_{min}$$

$$Z_R = R_o\left[\frac{1 - jS\tan(2\pi s'/\lambda)}{S - j\tan(2\pi s'/\lambda)}\right]$$

Reflection losses on the unmatched Line

$$|E_{max}| = |E_i| + |E_r|$$

$$|E_{min}| = |E_i| - |E_r|$$

$$\frac{P}{P_i} = \frac{4S}{(S+1)^2}$$

Tamilnadu College Of Engineering

TWO MARK QUESTIONS AND ANSWERS

1. What is meant by electrical length of the line ?

The length of the transmission line expressed interms of wavelength is called an electrical length of line. examples : $\frac{\lambda}{4}, \frac{\lambda}{2}$ *and* $\frac{\lambda}{8}$ lines.

2. What is the application of quarter wave line ?

i) A quarter wave line may be used as a transformer for matching the load impedance with input impedance.

ii) It can transform a low impedance into high impedance and vice versa, thus it can be considered as an impedance inverter.

3. Why is the quarter wave line called as copper insulator ?

When the quarter wave line is shorted at ground, its input impedance is very high. So the signal on the line passes to the receiving end without any loss. Thus the line acts as an insulator at this point. Hence such line is referred as copper insulator.

4. What is stub matching ?

The smooth line condition ($Z_R = R_o = Z_s$) can be achieved by use of an open or closed stub line of suitable length as a reactance shunted across the transmission line at a designated distance from the load. It is often referred as stub matching .

5. Why are short circuited stubs preferred over open circuited stub?

The short circuited stub is ordinarily preferred to an open circuited stub because easy of construction and low loss.

6. What are the drawbacks of the single stub matching ?

i) It possible only in open wire line

ii) It is applicable for single frequency.

Tamilnadu College Of Engineering

7. What are the advantages of stub matching ?

i) Length and characteristic impedance remains unchanged.

ii) It is possible to add adjustable susceptance in shunt with the line mechanically.

8. What are the merits of double stub matching ?

i) It is applicable for more than one frequency.

ii) It is possible in both open wire line and coaxial cable.

9. Why is single stub matching inaccurate on coaxial line ?

For a coaxial cable, single stub matching is not possible to determine the location of a voltage minimum without a slotted line section, so that the placement of a stub is difficult at the required point. Due to this reason it is inaccurate on coaxial line.

10. What is a disadvantage of quarter wave line?

The quarter wave line is sensitive to change in frequency.

11. Discuss the importance of smooth line.

A line terminated in its characteristic impedance R_o is called smoothline. Because of proper termination, there is no mismatch of impedance hence no reflection takesplace. Thus no standing waves are produced. Then the maximum power transfer from generator to load is possible.

12. What is Smith chart ?

The Smith chart is the most commonly used graphical tool for solving radio frequency transmission line problems. The Smith chart is obtained by superposition of constant resistance r_a circles and constant reactance x_a circles.

Tamilnadu College Of Engineering

13. Write the applications of Smith chart.

It is used to find the impedance, admittance, reflection coefficient and SWR. It is used to design stubs for impedance matching.

14. Write the procedure to find the impedance from the given admittance using Smith chart.

First find normalized admittance for the given admittance. Then locate that point on the Smith chart say at point P. Then rotate the point P along constant S circle to 180° and locate point P^1 which is located diametrically opposite to point P. Then check r_a for intersection of x_a circle and obtain normalized inpedance value. After that multiply the obtained normalized impedance value by characteristic impedance R_o.

15. Give some of the impedance matching devices.

The quarter wave line or transformer and the tapered line are some of the impedance matching devices.

16. Explain impedance matching using stub.

In the method of impedance matching using stub, an open or closed stub line of suitable length is used as a reactance shunted across the transmission line at a designated distance from the load to tune the length of the line and the load to resonance with an antiresonant resistance equal to R_0.

17. What are the two independent measurements that must be made to find the location and length of the stub?

The standing wave ratio S and the position of a voltage minimum are the independent measurements that must be made to find the location and length of the stub.

Tamilnadu College Of Engineering

18. Give the formula to calculate the distance of the point from the load at which the stub is to be connected.

The formula to calculate the distance of the point from the load at which the stub is to be connected is

$$S_1 = \frac{\phi + \pi - \cos^{-1}(|K|)}{2\beta}$$

19. Give the formula to calculate the distance d from the voltage minimum to the point of stub connection.

The formula to calculate to distance d from the voltage minimum to the point of stab connection is,

$$d = \frac{\cos^{-1}(|K|)}{2\beta}$$

20. Write down the expression to determine the length of stub.

$$L = \frac{\lambda}{2\pi} \tan^{-1} \frac{\sqrt{1-|K|^2}}{2|K|}$$

21. What is the use of a circle diagram?

The circle diagram may be used to find the input impedance of a line of any chosen length.

22. How is the circle diagram useful to find the input impedance of short and open circuited lines?

An open circuited lien has $S = \infty$, the correspondent a role appearing as the vertical axis. The input impedance is then pure reactance, with the value for various electrical length, determined by the intersections of the corresponding βs circles with the vertical axis. A short circuited line may be solved by determining its admittance. The S circle is again the vertical axis and susceptance values may be read off at appropriate intersection of the βs circles with the vertical axis.

Tamilnadu College Of Engineering

23. What is double stub matching?

Another possible method of impedance matching is to use two stubs in which the locations of the stubs are arbitrary, the two stub lengths furnishing the required adjustments. The spacing is frequently made $\lambda/4$. This is called double stub matching.

24. Give reason for an open line not frequently employed for impedance matching.

An open line is rarely used for impedance matching because of radiation losses from the open end capacitance effect and the difficulty of a smooth adjustment of length.

25. Give the names of circles on Smith chart.

i. Constant r_a circles

ii. Constant x_a circles

26. What are constant S circle ?

The input impedance equation for dissipationless line is expressed interms of standing wave ratio results in the form of a circle. These circles are called as constant S circle.

27. Explain how Smith chart can be used as an admittance chart?

The smith chart may be used as an admittance chart, the R and X axis become g and b axis. With the usual implication that capacitive susceptance is positive above and inductive susceptance below the real axis. The point at the left of the conductance of a axis then represents zero conductance or an open circuit, while the point at extreme right represent infinite conductance or a short circuit.

28. What is stub matching?

For the maximum transfer of power, the sending end impedance and receiving end impedance of a transmission line should be matched perfect. In practical cases, this impedance matching is not perfect. So a stub is placed on the transmission line and its length position is adjusted for maximum power transfer. This is called as stub matching.

Tamilnadu College Of Engineering

29. How tapped $\frac{\lambda}{4}$ line can be used as an impedance transformer?

A quarter wave line may be considered as an impedance inverter in that it can transform a low impedance into a high impedance and transforming the zero impedance short circuited termination to an apparent open circuit end of the open circuited $\frac{\lambda}{4}$ line transferring the open circuited termination to a low value of an apparent short circuit.

30. What is bilinear transformation? Mention the utility with respect to the Smith chart?

A linear variable is related to another linear variable then the relation between those two variables transform one set of variable in one domain to another set of variables. This is called as bilinear transformation.

The idea of bilinear transformation is useful in deriving the constant r_a and constant x_a circles. These circles constitute the Smith chart.

31. List the steps to find the impedance from the given admittance using Smith chart.

i. Normalize the given admittance by its characteristic admittance (Y_0).

$$Y_0' = \frac{y}{Y_0} = yZ_0 \text{ since } Z_0 = \frac{1}{Y_0}$$

ii. Plot the normalized admittance as point P on the Smith chart.

iii. Draw an impedance circle with (1 + j0) as centre O and OP as radius.

iv. Find the diametrically opposite point Q to that of the normalized admittance point P on the circle. The point Q is the normalized impedance Z_0'. The actual impedance is obtained by multiplying Z_0' with the characteristic impedance. That is $Z = Z_0' Z_0$.

Tamilnadu College Of Engineering

32. Write the reflection coefficient interms of standing wave ratio and also write stub length interms of standing wave ratio.

$$K = \frac{S-1}{S+1} \text{ and}$$

$$L = \frac{\lambda}{2\pi}\tan^{-1}\left[\frac{\sqrt{S}}{S-1}\right]$$

33. Given an application of an eight wave line.

The input impedance of an eight wave line is given by $|Z_s| = R_0$. It is used to transform any resistance to an impedance with a magnitude equal to R_0 of the line or to obtain a magnitude match between a resistance of any value and a source of R_0 internal resistance.

34. What is the input impedance of a eighth wave, quarter wave and half wave lines?

For eight wave line,

$$Z_s = R_0$$

For quarter wave line,

$$Z_s = \frac{R_0^2}{Z_R}$$

For a half wave line,

$$Z_S = Z_R$$

35. How will you find out the location of voltage maximum and minimum?

The intersection of the S circle with the horizontal real axis gives voltage maximum and minimum points. The intersection point located on the left of the centre represents a voltage minima while that on the right of the circle represents a voltage maximum.

Tamilnadu College Of Engineering

FORMULAS

Quarter wave transformer

$$Z_s = \frac{R_o^2}{Z_R}$$

$$R_o = \sqrt{Z_s Z_R}$$

Single stub matching

$$S_2 = \frac{\phi + \pi}{2\beta}$$

$$S_1 = \frac{\phi + \pi - \cos^{-1}(|K|)}{2\beta}$$

$$d = S_2 - S_1 = \frac{\cos^{-1}(|K|)}{2\beta}$$

$$L = \frac{\lambda}{2\pi} \tan^{-1} \frac{\sqrt{1 - |K|^2}}{2|K|}$$

Smith chart

$$r_a = \frac{1 - U^2 - V^2}{(1 - U)^2 + V^2}$$

$$x_a = \frac{2V}{(1 - U)^2 + V^2}$$

Constant resistance circle

$$\left[U - \frac{r_a}{1 + r_a}\right]^2 + V^2 = \frac{1}{(1 + r_a)^2}$$

Constant rectance circle

$$(U - 1)^2 + \left(V - \frac{1}{x_a}\right)^2 = \frac{1}{x_a^2}$$

Normalized impedance

$$Z_r = \frac{Z_R}{R_o} = \frac{1 + K}{1 - K}$$

Tamilnadu College Of Engineering

TWO MARK QUESTIONS AND ANSWERS

1) What are guided waves? Give examples.

The electromagnetic waves that are guided along or over conducting or dielectric surfaces are called guided waves.

Examples: wave along parallel wire transmission lines, waves in waveguides

2) Define waveguide.

Waveguide is a hollow conducting metallic tube of uniform cross section for propagating the electromagnetic waves.

3) What is an evanescent mode?

When the operating frequency is lower than the cut off frequency, the propagation constant becomes real i. e., $\gamma = \alpha$. The wave cannot be propagated. This non propagating mode is known as evanescent mode.

4) What is mean by dominant mode?

A mode having lowest cut off frequency is called dominant mode. TE_{10} mode is dominant mode in rectangular waveguide.

5) What is meant degenerate mode?

Some of the higher order mode having same cut off frequency is called degenerate mode.

6) What are TE waves or H wave?

Transverse electric waves are waves in which electric field strength E is entirely transverse. It has a magnetic field component H_z in the direction of propagation and no electric field component E_z in the direction of propagation. $(E_z = 0;\ H_z \neq 0)$

7) What is TM wave or E wave?

Transverse magnetic waves are waves in which magnetic field strength is entirely transverse. It has a electric field component E_z in the direction of propagation and no magnetic field component H_z in the direction of propagation. $(H_z = 0;\ E_z \neq 0)$

Tamilnadu College Of Engineering

8) What is TEM wave or principal wave?

Transverse electromagnetic wave is a special case of TM wave in which both electric field and magnetic field strength are entirely transverse. It has no component of electric field and magnetic field in the direction of propagation. ($E_z = 0$ and $H_z = 0$)

9) List the characteristics of TEM wave.

- ✓ Its velocity is independent of frequency and it is equal to free space velocity.
- ✓ The cut off frequency of TEM wave is zero($f_c = 0$)
- ✓ It is a special case of TM waves in which both E_z and H_z are zero

10) Define critical frequency (or) cut off frequency.

The frequency at which wave motion ceases is called cut off frequency or critical frequency.

11) Why TEM wave is not possible in a rectangular waveguide ?

TEM wave has no axial component of either E or H, so it cannot propagate within a single conductor waveguide.

12) What is a parallel plate transmission line?

It consists of two parallel conducting plats separated by a dielectric slab of uniform thickness.

13) Define phase velocity.

It is defined as the velocity of propagation of equi phase surface along waveguide.

$$v_{ph} = v_p = \frac{\omega}{\beta} = \frac{v}{\sqrt{1-\frac{f_c^2}{f^2}}}$$

Tamilnadu College Of Engineering

14) Define group velocity.

It is defined as the velocity with which the energy propagates along the waveguide.

$$v_g = \frac{d\omega}{d\beta} = \frac{v^2}{v_{ph}}$$

15) Define wave impedance.

It is defined as the ratio of electric field to magnetic field strength and is represented by Z.

$$Z = \frac{E_x}{H_y} \quad (or) \quad \frac{-E_y}{H_x}$$

16) A waveguide can be called as high pass filter. Justify

wave propagation does not exist for frequencies below cut off frequency and above cut off frequency wave propagation does occur in waveguide. So wave guide can be called as high pass filter.

17) What is circular waveguide? Mention the applications of circular waveguide.

A circular waveguide is a cylindrical hollow metallic tube with uniform cross section of radius 'a'.

Applications:

- ✓ It is used as attenuators and phase shifters
- ✓ It is used in long distance communication.

18) What is dominant mode in a rectangular and circular waveguide?

- ✓ In rectangular waveguide TE_{10} mode is dominant mode
- ✓ In circular waveguide TE_{11} mode is dominant mode.

19) Why are rectangular waveguides preferred over circular waveguides?

- ✓ Rectangular waveguide is smaller in size than a circular waveguide of same operating frequency
- ✓ It does not maintain its polarization through the circular waveguide.
- ✓ The difference between the lowest frequency on dominant mode and the next mode of a rectangular waveguide is higher that in a circular waveguide.

Tamilnadu College Of Engineering

20) Why waveguide is taken in circular or rectangular form?

Waveguide is usually take the form of rectangular or circular cylinder because of its simpler forms and less expensive to manufacture.

21) What are cavity resonator?

If an excited rectangular or cylindrical waveguide is closed by perfectly conducting sheets on the two end sections, a standing wave pattern will be set up along the axis of propagation. A cavity thus formed confines electromagnetic fields inside is completely surrounded by conducting walls, thus eliminating radiation and high resistance effects. These enclosure has natural resonant frequencies and very high quality factor and are called cavity resonators.

22) Give the applications of cavity resonators?

- ✓ Cavity resonators are tunable circuits used in microwave oscillators, amplifiers and filters.
- ✓ It is used in duplexers and radar systems

23) What are the performance parameters of microwave resonator?

- ✓ Resonant frequency.
- ✓ Quality factor.
- ✓ Input impedance.

24) Define Quality factor (or) Q factor.

Quality factor is a measure of frequency selectivity of resonator. It is defined as

$$Q = 2\pi \times \frac{\text{Maximum energy stored}}{\text{Energy dissipated per cycle}} = \omega \frac{W}{P}$$

Where W is the maximum stored energy, P is the average power loss

$$Q = \frac{f_0}{\text{Bandwidth}}$$

25) What is dominant mode for rectangular resonator?

The dominant mode of a rectangular resonator depends on dimension of cavity. For b < a < d, the dominant mode is TE_{101} mode.

Tamilnadu College Of Engineering

FORMULAS

1) $f_c = \frac{m}{2a} \times \frac{1}{\sqrt{\mu\varepsilon}}$

2) $v \quad or \quad c = \frac{1}{\sqrt{\mu\varepsilon}}$

3) $\beta = \sqrt{\omega^2\mu\varepsilon - \left(\frac{m\pi}{a}\right)^2 - \left(\frac{n\pi}{b}\right)^2}$

4) $v_{ph} = \frac{\omega}{\beta}$

5) $v_g = \frac{c^2}{v_{ph}}$

6) $\lambda_g = \frac{2\pi}{\beta}$

7) $\lambda_c = \frac{2a}{m}$

8) $v_{ph} = \frac{v}{\sqrt{1 - \left(\frac{f_c}{f}\right)^2}}$

9) $\beta = \omega\sqrt{\mu\varepsilon}$ (For TEM)

10) $\eta = \frac{E}{H} = \sqrt{\frac{\mu}{\varepsilon}}$

11) $\lambda_o = \frac{c}{f}$

12) $f_c = \frac{1}{2\pi\sqrt{\mu\varepsilon}}\sqrt{\left(\frac{m\pi}{a}\right)^2 + \left(\frac{n\pi}{b}\right)^2} = \frac{v}{2}\sqrt{\left(\frac{m}{a}\right)^2 + \left(\frac{n}{b}\right)^2}$

Tamilnadu College Of Engineering

13) $\lambda_g = \dfrac{\lambda_o}{\sqrt{1-\left(\dfrac{\lambda_o}{\lambda_c}\right)^2}}$ (or) $\lambda_o = \dfrac{\lambda_c\,\lambda_g}{\sqrt{\lambda_c^2+\lambda_g^2}}$

14) $\lambda_c = \dfrac{2}{\sqrt{\left(\dfrac{m}{a}\right)^2+\left(\dfrac{n}{b}\right)^2}}$

15) $Q = \dfrac{f_o}{\text{Bandwidth}}$

16) $Z_{TE} = \dfrac{\eta}{\sqrt{1-\dfrac{f_c^2}{f^2}}}$

17) $Z_{TM} = \eta\sqrt{1-\dfrac{f_c^2}{f^2}}$

18) $Z_{TEM} = \eta = \sqrt{\dfrac{\mu}{\varepsilon}}$

19) $f_c = \dfrac{h_{nm}}{2\pi\sqrt{\mu\varepsilon}}$ for circular waveguide (or) $\dfrac{(h_a)nm}{2\pi a\sqrt{\mu\varepsilon}}$

20) Resonant frequency of rectangular cavity resonator

$$f_o = \frac{1}{2\sqrt{\mu\varepsilon}}\sqrt{\left(\frac{m}{a}\right)^2+\left(\frac{n}{b}\right)^2+\left(\frac{p}{d}\right)^2}$$

21) Propagation constant $\gamma = \sqrt{\left(\dfrac{m\pi}{a}\right)^2+\left(\dfrac{n\pi}{b}\right)^2-\omega^2\mu\varepsilon}$

22) Resonant frequency of circular cavity resonator

$$f_o = \frac{1}{2\pi\sqrt{\mu\varepsilon}}\sqrt{\left(\frac{q_{nm}}{a}\right)^2+\left(\frac{p\pi}{d}\right)^2}$$

Tamilnadu College Of Engineering

TWO MARK QUESTIONS AND ANSWERS

1. What are the key parameters used to evaluate the performance of an amplifier?

i) Gain and gain flatness

ii) Operating frequency and bandwidth

iii) Output power

iv) Power supply requirements

v) Input and output reflection coefficient

vi) Noise figure.

2. Define transducer power gain.

It is gain of the amplifier when placed between source and load.

$$G_T = \frac{\text{Power delivered to the load}}{\text{Available power from the source}} = \frac{P_L}{P_A}$$

3. Define unilateral power gain.

It is amplifier power gain when feedback effect of amplifier in neglected $S_{12} = 0$.

4. Define unconditional stability.

Unconditional stability refers to the situation where the amplifier remains stable for any passive source and load at the selected frequency and bias conditions.

5. What is the need of matching network?

It can help stabilize the amplifier by keeping the source and load impedances in the appropriate range.

6. What are factors used for selecting a matching network?

- ✓ Complexity
- ✓ Bandwidth requirement
- ✓ Adjustability
- ✓ Implementation

Tamilnadu College Of Engineering

7. Define operating power gain.

It is defined as ratio of power delivered to the load to the power supplied to the amplifier

$$G = \frac{\text{Power deliverd to load}}{\text{Power supplied to the amplifier}} = \frac{P_L}{P_{in}}$$

8. What are the advantages of microwave transistors?

Microwave transistors are miniaturized designs to reduce device and package parasitic capacitances and inductances and to overcome the finite transit time of the charge carriers in the semiconductor materials.

9. What is bipolar transistor?

Bipolar is a three semiconductor (pnp or npn) region structure where charge carriers of both negative (electrons) and positive (holes) polarities are involved in transistor operation.

10. Write the applications of bipolar transistors.

Bipolar transistors are suitable for oscillator and power amplifier applications in addition to small signal amplifiers.

11. What are the different modes of bipolar transistor?

- ✓ Normal (active) mode
- ✓ Saturation mode
- ✓ Cut off mode
- ✓ Inverse (Inverted mode)

12. What is referred as unipolar transistor?

In field effect transistors, the current flow is carried by majority carriers either electrons or holes, this type is referred to as unipolar transistor.

13. Write the advantages of unipolar transistor?

✓ Efficiency is higher

Tamilnadu College Of Engineering

✓ Noise figure is low

✓ It may have voltage gain in addition to current gain.

✓ Its operating frequency is upto X band.

✓ Its input resistance is very high upto several mega ohms.

14. What is MESFET?

Field effect transistors at microwave frequencies are mostly fabricated in GaAs and use a metal semiconductor schottky junction for gate contact. This device is referred as MESFET (Metal Semiconductor FET)

15. Define pinch off voltage.

It is the gate reverse voltage that removes all the free charge from the channel.

16. What is called high electron mobility transistor?

The field effect transistor made using hetero junction is called high electron mobility transistor.

17. Define threshold voltage.

A minimum gate voltage is required to induce the channel and it is called threshold voltage.

Tamilnadu College Of Engineering