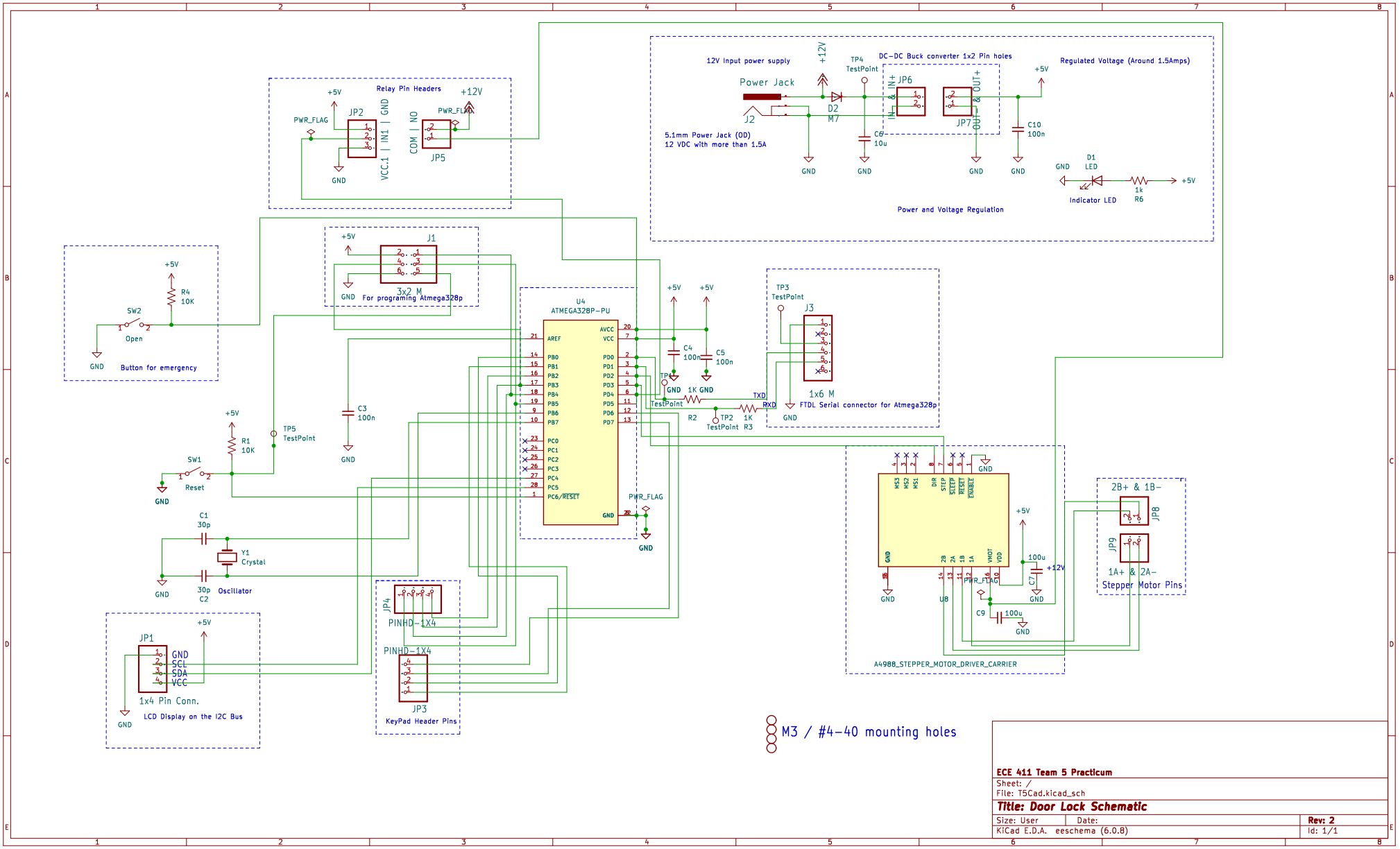

ECE 411 Team 5 Practicum

Sheet: /

File: T5Cad.kicad_sch

Title: Door Lock Schematic

Size: User	Date:	**Rev: 2**
KiCad E.D.A. eeschema (6.0.8)		Id: 1/1