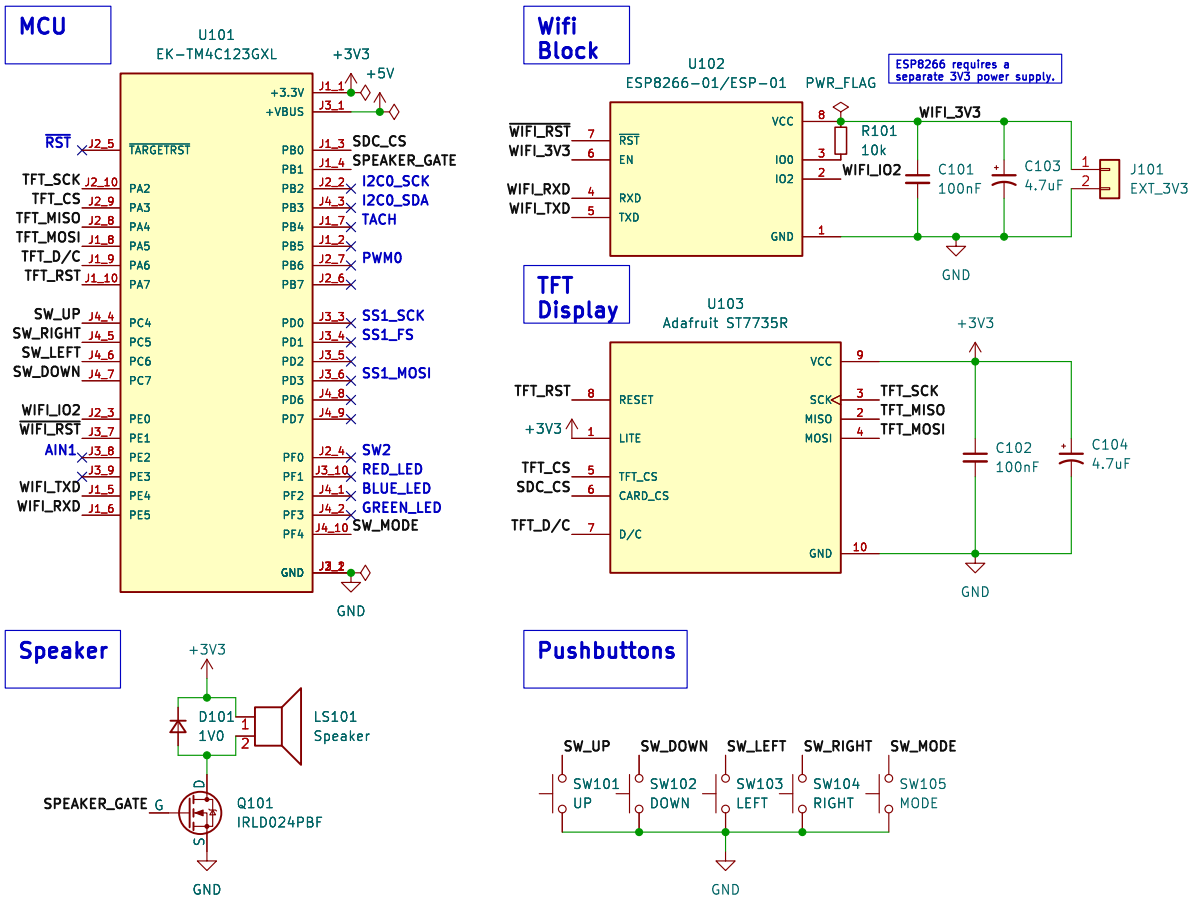

ECE 445L Baseline Project

v1.0.0

Errata

v1.0.0
- Initial revision.

The University of Texas at Austin

Sheet: /
File: baseline_project.kicad_sch

Title: ECE 445L Baseline Project

Size: A4	Date: 2023-08-25	Rev: v1.0.0
KiCad E.D.A. kicad 7.0.7-7.0.7~ubuntu22.04.1		Id: 1/1