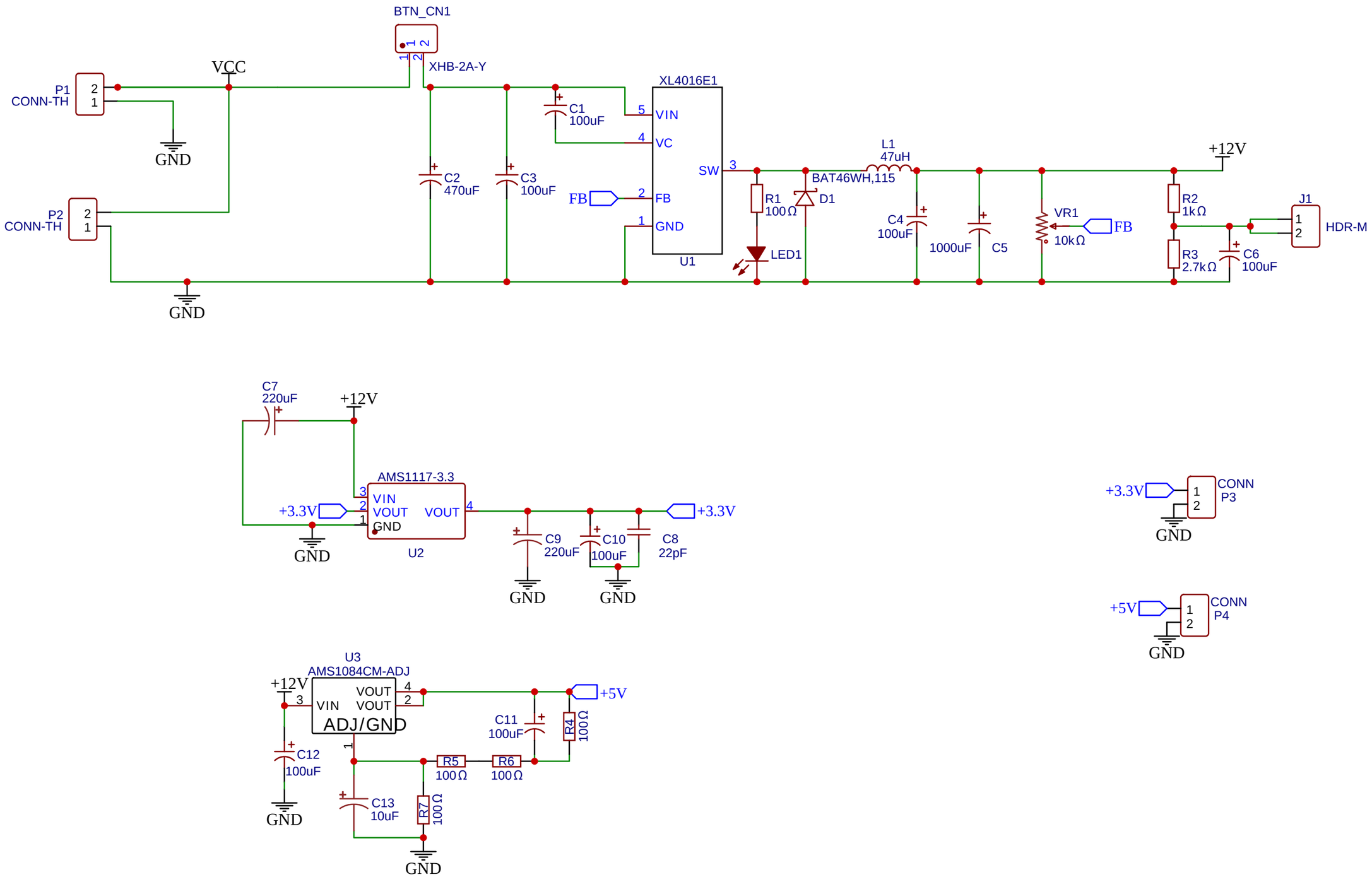

TITLE: Plate_for_junction		REV: 4.3
	Company: EconstB	Sheet: 1/1
	Date: 2024-03-27 Drawn By: Bratus Denis	