THIS DRAWING IS UNPUBLISHED. RELEASED FOR PUBLICATION -,- .
© COPYRIGHT - BY TYCO ELECTRONICS CORPORATION. ALL RIGHTS RESERVED.

LOC	DIST
AD	00

REVISIONS

P	LTR	DESCRIPTION	DATE	DWN	APVD
	A	ECO-06-26227	07NOV06	MB	MS

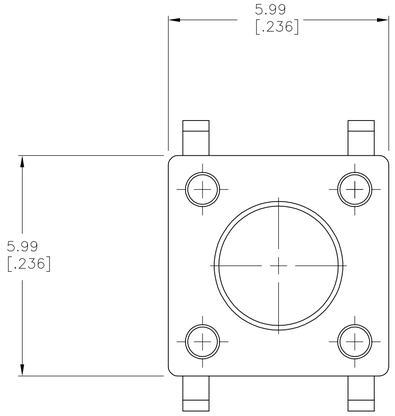

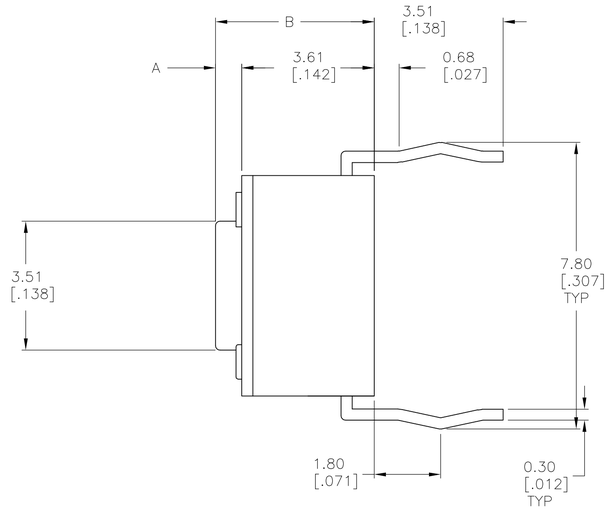

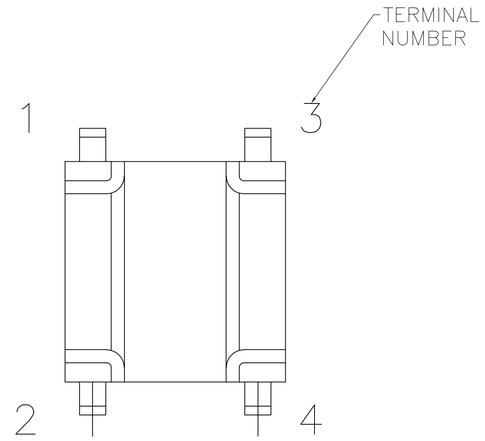

SPECIFICATIONS:

MATERIALS:
CASE: NYLON 66 UL94HB, 30% GF-BLACK
ACTUATOR: NYLON OR PPS UL94V-0, SEE P/N TABLE
COVER: STEEL-TIN PLATE
MOVING CONTACT: COPPER ALLOY-SILVER FINISH
FIXED CONTACT/TERMINAL: COPPER ALLOY-SILVER OVER NICKEL FINISH

ELECTRICAL:
MAX CONTACT RATING, 50MA@12VDC
MIN CONTACT RATING, 10 MICROAMP @ 1V DC
INITIAL CONTACT RESISTANCE, 100 MILLIOHMS MAX
INSULATION RESISTANCE, 100 MEGOHM MIN. @ 100V DC
DIELECTRIC STRENGTH, 500 V AC FOR 1 MINUTE
LIFE EXPECTANCY, 100,000 CYCLES MIN (2 CYCLES PER SECOND AND 150% ACTUATION FORCE), EXCEPT FOR THE 520 GF MODEL WHICH WOULD BE 50,000 CYCLES MIN.

MECHANICAL:
ACTUATION FORCE, SEE TABLE
ACTUATION TRAVEL, .010 +.008/-.004
LIFE EXPECTANCY, 100,000 CYCLES MIN (2 CYCLES PER SECOND AND 150% ACTUATION FORCE), EXCEPT FOR THE 520 GF MODEL WHICH WOULD BE 50,000 CYCLES MIN.

ENVIRONMENTAL:
OPERATING TEMPERATURE, -35 TO +85 DEGREES C
STORAGE TEMPERATURE, -35 TO +85 DEGREES C
THERMAL SHOCK, PER EIA-364-32C, -35 TO +85 DEGREES C
SOLDERABILITY, PER EIA-364-52, CLASS 2, CATEGORY 1, CATEGORY 2, 95% MINIMUM COVERAGE
RESISTANCE TO SOLDER HEAT, PER 109-202, CONDITION B

Notes:
1. ALL MATERIALS AND FINISHES SHALL COMPLY WITH EU DIRECTIVE 2002/95/EC OF 27JAN2003 (ROHS).

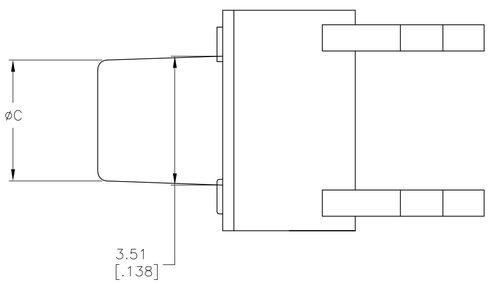

VIEW A-A
FSM6J THRU FSM18J

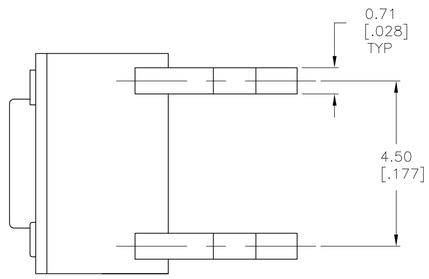

( )-INDICATES MOMENTARY POSITION		
CIRCUIT CHARACTERISTICS		
CONTACT POSITION		CIRCUIT DIAGRAM
OFF	(ON) 1-3 2-4	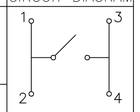

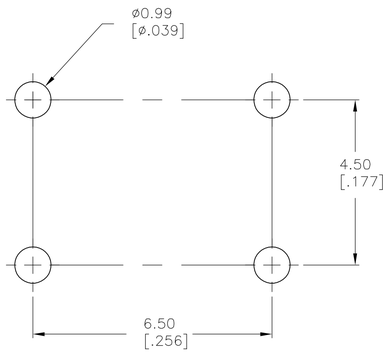

RECOMMENDED HOLE LAYOUT
TOLERANCE ±0.05[.002] UNLESS OTHERWISE NOTED

ACTUATOR MATERIAL	ACTUATOR COLOR	ACTUATOR FORCE	DIM C	DIM B	DIM A	ALCO P/N	TYCO PART NUMBER
NYLON 6T	YELLOW	520 +/-100 GF	3.09 [.122]	8.50 [.335]	4.90 [.193]	FSM18JAAH	3-1825910-7
NYLON 6T	WHITE	260 +/-50 GF	3.09 [.122]	8.50 [.335]	4.90 [.193]	FSM18JAH	3-1825910-6
PPS	BLACK	160 +/-50 GF	3.09 [.122]	8.50 [.335]	4.90 [.193]	FSM18JH	3-1825910-5
PPS	BROWN	100 +/-50 GF	3.09 [.122]	8.50 [.335]	4.90 [.193]	FSM18JLH	3-1825910-4
NYLON 6T	YELLOW	520 +/-100 GF	2.80 [.110]	17.00 [.669]	13.40 [.527]	FSM16JAAH	3-1825910-3
NYLON 6T	WHITE	260 +/-50 GF	2.80 [.110]	17.00 [.669]	13.40 [.527]	FSM16JAH	3-1825910-2
PPS	BLACK	160 +/-50 GF	2.80 [.110]	17.00 [.669]	13.40 [.527]	FSM16JH	3-1825910-1
PPS	BROWN	100 +/-50 GF	2.80 [.110]	17.00 [.669]	13.40 [.527]	FSM16JLH	3-1825910-0
NYLON 6T	YELLOW	520 +/-100 GF	2.87 [.118]	13.00 [.512]	9.40 [.370]	FSM14JAAH	2-1825910-9
NYLON 6T	WHITE	260 +/-50 GF	2.87 [.118]	13.00 [.512]	9.40 [.370]	FSM14JAH	2-1825910-8
PPS	BLACK	160 +/-50 GF	2.87 [.118]	13.00 [.512]	9.40 [.370]	FSM14JH	2-1825910-7
PPS	BROWN	100 +/-50 GF	2.87 [.118]	13.00 [.512]	9.40 [.370]	FSM14JLH	2-1825910-6
NYLON 6T	YELLOW	520 +/-100 GF	3.20 [.126]	8.00 [.315]	4.40 [.173]	FSM12JAAH	2-1825910-5
PPS	BLACK	260 +/-50 GF	3.20 [.126]	8.00 [.315]	4.40 [.173]	FSM12JABH	2-1825910-4
NYLON 6T	WHITE	260 +/-50 GF	3.20 [.126]	8.00 [.315]	4.40 [.173]	FSM12JAH	2-1825910-3
PPS	BLACK	160 +/-50 GF	3.20 [.126]	8.00 [.315]	4.40 [.173]	FSM12JH	2-1825910-2
PPS	BROWN	100 +/-50 GF	3.20 [.126]	8.00 [.315]	4.40 [.173]	FSM12JLH	2-1825910-1
NYLON 6T	YELLOW	520 +/-100 GF	3.25 [.128]	7.30 [.287]	3.70 [.146]	FSM10JAAH	2-1825910-0
NYLON 6T	WHITE	260 +/-50 GF	3.25 [.128]	7.30 [.287]	3.70 [.146]	FSM10JAH	1-1825910-9
PPS	BLACK	160 +/-50 GF	3.25 [.128]	7.30 [.287]	3.70 [.146]	FSM10JH	1-1825910-8
PPS	BROWN	100 +/-50 GF	3.25 [.128]	7.30 [.287]	3.70 [.146]	FSM10JLH	1-1825910-7
NYLON 6T	YELLOW	520 +/-100 GF	3.10 [.122]	9.50 [.374]	5.90 [.232]	FSM8JAAH	1-1825910-6
NYLON 6T	WHITE	260 +/-50 GF	3.10 [.122]	9.50 [.374]	5.90 [.232]	FSM8JAH	1-1825910-5
PPS	BLACK	160 +/-50 GF	3.10 [.122]	9.50 [.374]	5.90 [.232]	FSM8JH	1-1825910-4
PPS	BROWN	100 +/-50 GF	3.10 [.122]	9.50 [.374]	5.90 [.232]	FSM8JLH	1-1825910-3
NYLON 6T	YELLOW	520 +/-100 GF	3.30 [.130]	7.00 [.276]	3.40 [.134]	FSM6JAAH	1-1825910-2
NYLON 6T	WHITE	260 +/-50 GF	3.30 [.130]	7.00 [.276]	3.40 [.134]	FSM6JAH	1-1825910-1
PPS	BLACK	160 +/-50 GF	3.30 [.130]	7.00 [.276]	3.40 [.134]	FSM6JH	1-1825910-0
PPS	BROWN	100 +/-50 GF	3.30 [.130]	7.00 [.276]	3.40 [.134]	FSM6JLH	1825910-9
NYLON 6T	YELLOW	520 +/-100 GF	N/A	5.00 [.196]	1.40 [.055]	FSM4JAAH	1825910-8
NYLON 6T	WHITE	260 +/-50 GF	N/A	5.00 [.196]	1.40 [.055]	FSM4JAH	1825910-7
PPS	BLACK	160 +/-50 GF	N/A	5.00 [.196]	1.40 [.055]	FSM4JH	1825910-6
PPS	BROWN	100 +/-50 GF	N/A	5.00 [.196]	1.40 [.055]	FSM4JLH	1825910-5
NYLON 6T	YELLOW	520 +/-100 GF	N/A	4.30 [.169]	0.70 [.028]	FSM2JAAH	1825910-4
NYLON 6T	WHITE	260 +/-50 GF	N/A	4.30 [.169]	0.70 [.028]	FSM2JAH	1825910-3
PPS	BLACK	160 +/-50 GF	N/A	4.30 [.169]	0.70 [.028]	FSM2JH	1825910-2
PPS	BROWN	100 +/-50 GF	N/A	4.30 [.169]	0.70 [.028]	FSM2JLH	1825910-1

THIS DRAWING IS A CONTROLLED DOCUMENT.

DIMENSIONS: mm [INCHES]

TOLERANCES UNLESS OTHERWISE SPECIFIED:
0 PLC ± -
1 PLC ± -
2 PLC ± 0.30 [.012]
3 PLC ± -
4 PLC ± -
ANGLES ± -

MATERIAL: SEE SPECIFICATIONS
FINISH: -

DWN M.BINNER 07NOV06
CHK M.SARVER 07NOV06
APVD M.SARVER 07NOV06
PRODUCT SPEC —
APPLICATION SPEC —
WEIGHT —

tyco Electronics
Tyco Electronics Corporation
Harrisburg, PA 17105-3608

NAME: 6MM TACT SWITCH, THRU-HOLE HIGH TEMP
—

SIZE	CAGE CODE	DRAWING NO	RESTRICTED TO
A1	00779	C-1825910	—

CUSTOMER DRAWING
SCALE 12:1 SHEET 1 OF 1 REV A