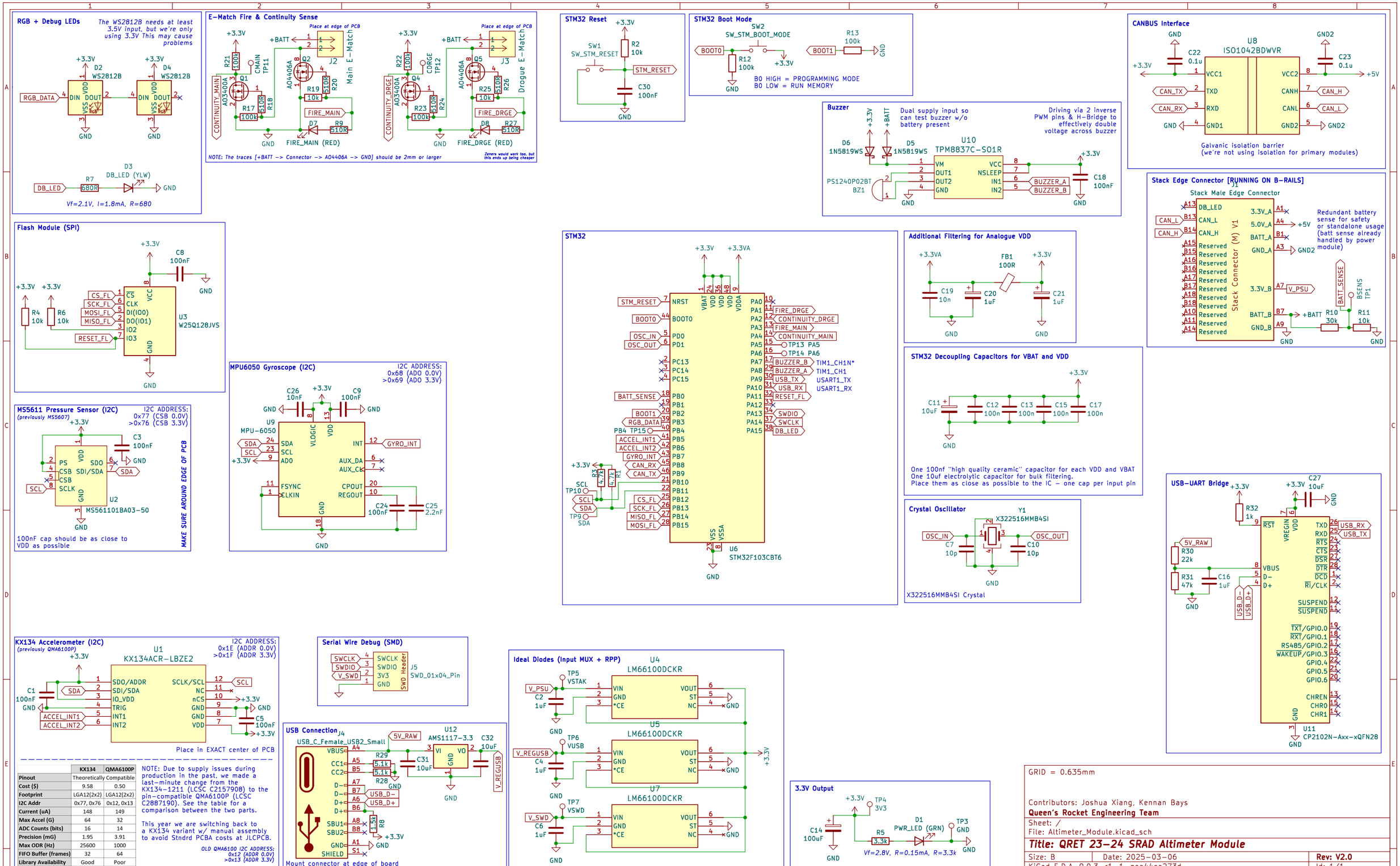

	KX134	QMA6100P
Pinout	Theoretically Compatible	
Cost ($)	9.58	0.50
Footprint	LGA12(2x2)	LGA12(2x2)
I2C Addr	0x77, 0x76	0x12, 0x13
Current (uA)	148	149
Max Accel (G)	64	32
ADC Counts (bits)	16	14
Precision (mG)	1.95	3.91
Max ODR (Hz)	25600	1000
FIFO Buffer (frames)	32	64
Library Availability	Good	Poor