EECS 151/251A Discussion 6

Zhaokai Liu
10/5, 10/6 and 10/11

Agenda

- RISC-V Pipeline and Hazards
- FPGA

Pipeline

Single-Cycle vs. Pipelined Performance

Why pipeline?

- In digital design, if clock speed doubles, the performance doubles
- Time constraints must be satisfied
- We want to keep every component busy!

More challenges

- Design complexity
- Hazard
- clk is determined by the longest stage

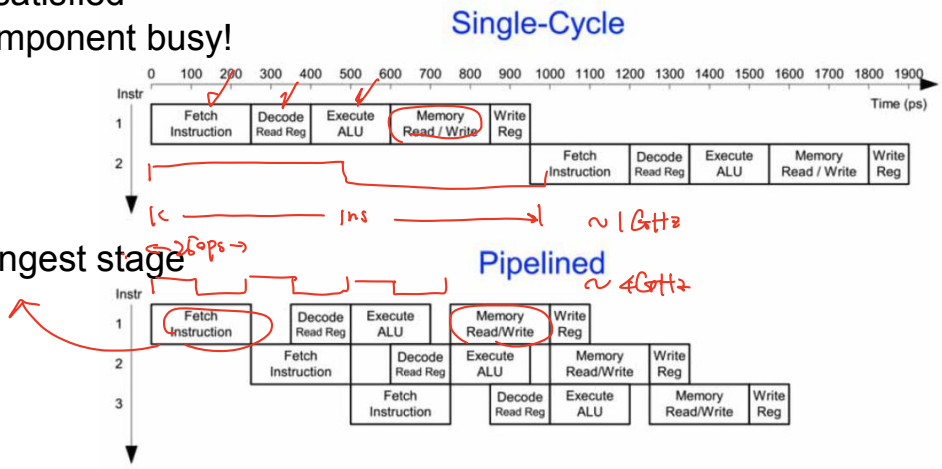

Complete datapath - pipeline

- Structural hazard

add x2, x1, x3

- Data hazard

add x2, x1, x3

sub x4, x2, x5

- Control hazard

beq x1, x2, label

inst 0

inst 1

inst 2

⋮

label: ——

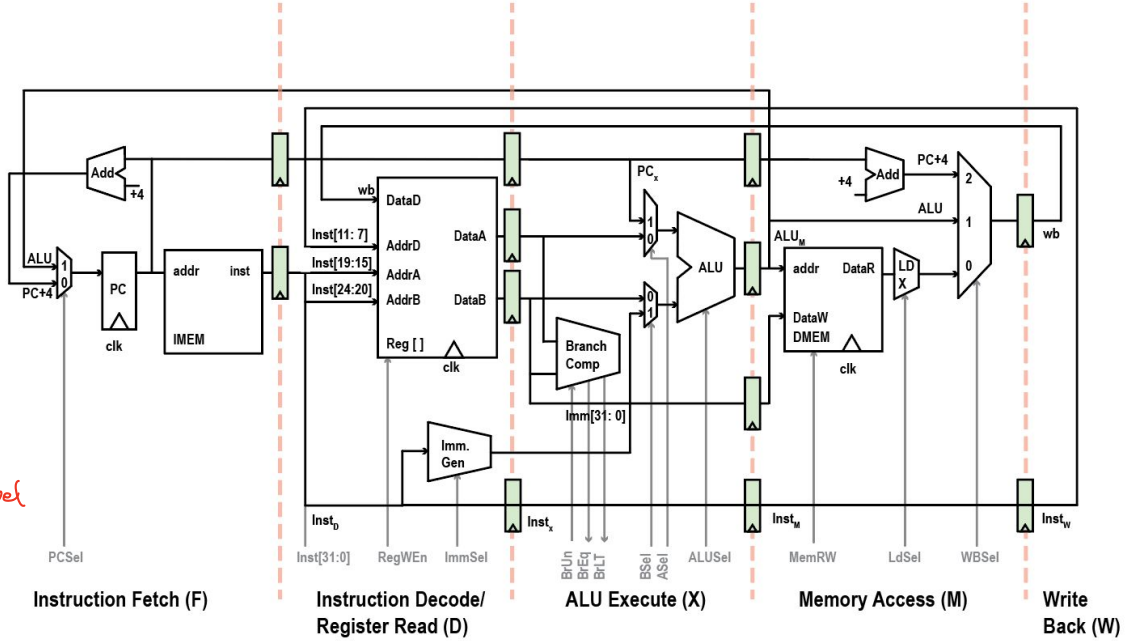

Hazards

Data Hazard - Stall

Consider a 5-stage pipeline

```
add x3, x1, x2
sub x4, x1, x2
xor x5, x1, x3
or  x6, x2, x5
```

$$CPI = \frac{11}{4} = 2.75$$

#	IF	D	EX	M	WB
1	add				
2	sub	add			
3	xor	sub	add		
4	or	xor	sub	add	
5	or	xor	—	sub	add
6		or	xor	—	sub
7		or	—	xor	—
8		or	—	—	xor
9			or	—	—
10				or	—
11					or

Data Hazard - Stall

Consider a 5-stage pipeline

```
add x3, x1, x2
sub x4, x1, x2
xor x5, x1, x3
or  x6, x2, x5
```

#	IF	D	EX	M	WB
1	add				
2	sub	add			
3	xor	sub	add		
4	or	xor	sub	add	
5	or	xor	-	sub	add
6		or	xor	-	sub
7		or	-	xor	-
8		or	-	-	xor
9			or	-	-
10				or	-
11					or

Data Hazard - Forwarding

Consider a 5-stage pipeline

```
add x3, x1, x2
sub x5, x4, x3
```

# cycle	1	2	3	4	5	6	7
add	F	D	E	M	W		
sub	*	F	D	_	D	E	M
				F	D	E	M	W

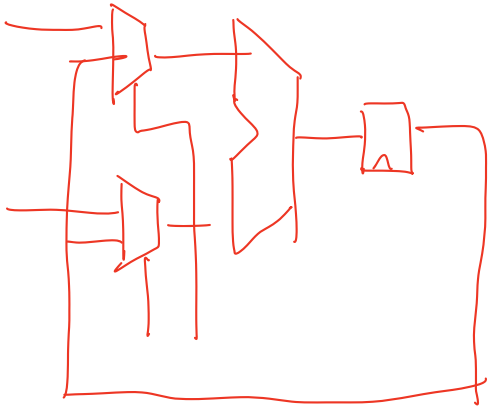

Control Hazard

3

For this datapath, how many **extra** cycles are taken if a wrong prediction is made?

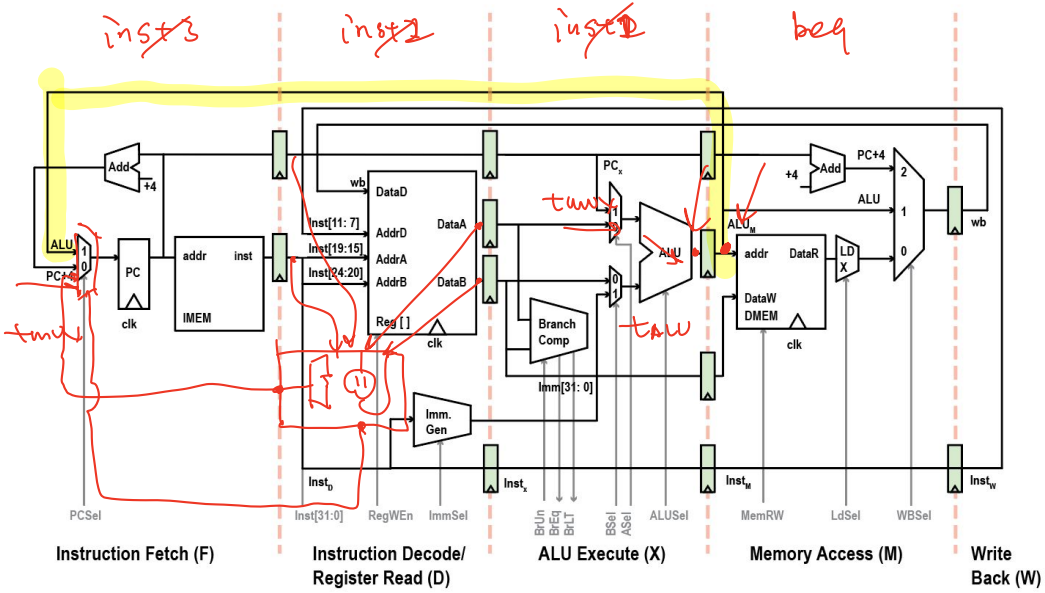

Control Hazard

Consider a 5-stage pipeline

- Branches are **not taken** by default
  - `x1=x2`

```
       beq x1, x2, imm
       add x3, x1, x2
       sub x4, x1, x2
       xor x5, x1, x2
       or  x6, x1, x2
       ...
imm:   and x3, x1, x2
       nop
```

#	IF	D	EX	M	WB
1	beq				
2	add	beq			
3	sub	add	beq		
4	xor	sub	add	beq	
5	and	xor	sub	add	beq
6	nop				
7					
8					
9					
10					

Control Hazard

Consider a 5-stage pipeline

- Branches are not taken by default
  - x1=x2

```
      beq x1, x2, imm
      add x3, x1, x2
      sub x4, x1, x2
      xor x5, x1, x2
      or  x6, x1, x2
      ...
imm:  and x3, x1, x2
      nop
```

#	IF	D	EX	M	WB
1	beq				
2	add	beq			
3	sub	add	beq		
4	xor	sub	add	beq	
5	and	-	-	-	beq
6	nop	and	-	-	-
7		nop	add	-	-
8			nop	add	-
9				nop	add
10					nop

Control Hazard

Consider a 5-stage pipeline

- Branches are **taken** by default
  - w/ forwarding hardware
  - **x1=x2**

```
        beq x1, x2, imm
        add x3, x1, x2
        sub x4, x1, x2
        xor x5, x1, x2
        or  x6, x1, x2
        ...
imm:    and x3, x1, x2
        nop
```

#	IF	D	EX	M	WB
1	beq				
2	and				
3	nop				
4					
5					
6					
7					
8					
9					
10					

Control Hazard

Consider a 5-stage pipeline

- Branches are not taken by default
  - w/ forwarding hardware
  - **x1=x2**

```
       beq x1, x2, imm
       add x3, x1, x2
       sub x4, x1, x2
       xor x5, x1, x2
       or  x6, x1, x2
       ...
imm:   and x3, x1, x2
       nop
```

#	IF	D	EX	M	WB
1	beq				
2	and	beq			
3	nop	and	beq		
4		nop	and	beq	
5			nop	and	beq
6				nop	and
7					nop
8					
9					
10					

Control Hazard - branch prediction

Base on last choice is a simple but useful strategy
Consider the following code:

```
addi x1, x0, 0
addi x2, x0, 1
addi x10, x0, 101
add  x1, x1, x2
addi x2, x2, 1
blt  x2, x10, -8
nop
```

taken ⇄ not taken

```
// equivalent to
s = 0;
for (i=1; i<101; i++){
  s += i;
}
```

1 x not taken ✗

98 x taken ✓

1 x not taken ✗

FPGA

FPGA Structure

- Array of ”Logic Cells” and interconnect
- What are “Logic Cells” exactly?
    - How to implement every possible logic function in finite space?
    - How to adapt to any N-bit wide input?

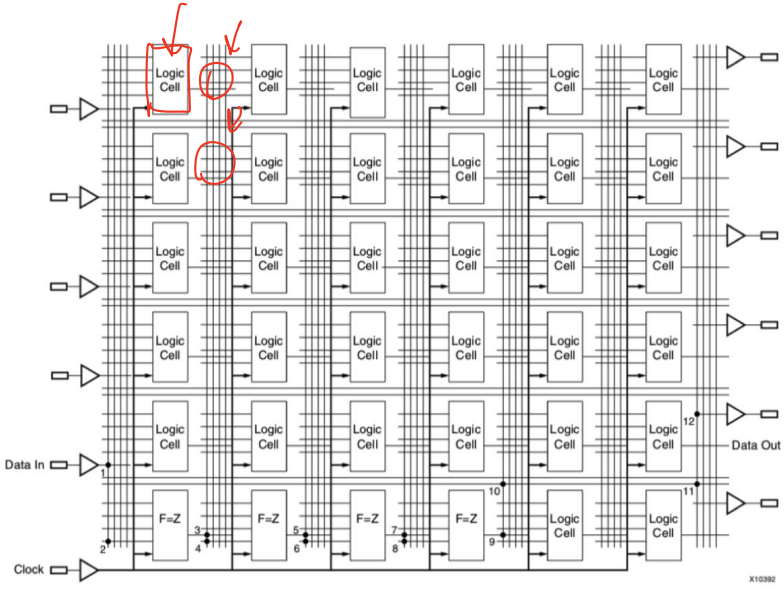

Implementing Functions with LUTs

- Like a hardware truth table
- Map each input to corresponding output
- Easy to implement
  - Use mux with programmable latches on each input
  - Program latch to correspond to expected output
  - Select output with inputs to LUT, timing is independent of function

A	B	C	Out
0	0	0	0
1	0	0	1
0	1	0	1
1	1	0	0
0	0	1	1
1	0	1	0
0	1	1	0
1	1	1	1

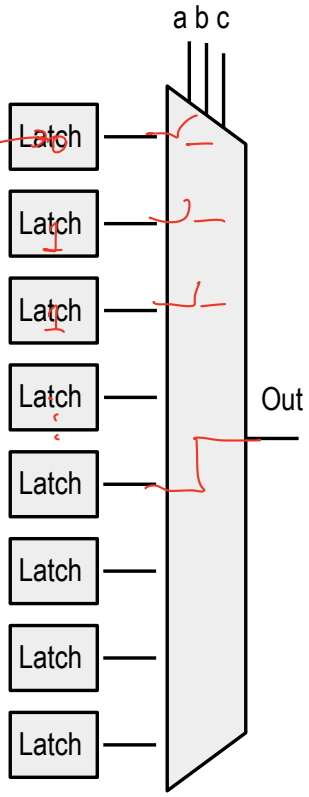

What function is this?

A	B	C	Out
0	0	0	0
1	0	0	0
0	1	0	0
1	1	0	0
0	0	1	0
1	0	1	0
0	1	1	0
1	1	1	1

Out = $A \cdot B \cdot C$

A	B	C	Out
0	0	0	0
1	0	0	1
0	1	0	1
1	1	0	0
0	0	1	0
1	0	1	1
0	1	1	0
1	1	1	0

Out = $A\bar{B}\bar{C} + \bar{A}B\bar{C} + A\bar{B}C$

Implementing Functions with LUTs

- Array of LUTs and interconnect
  - Here's a proto-FPGA of 3-input LUTs
  - Can perform any combination of 3- input logic functions!
- What if we want to have a 4-input function?

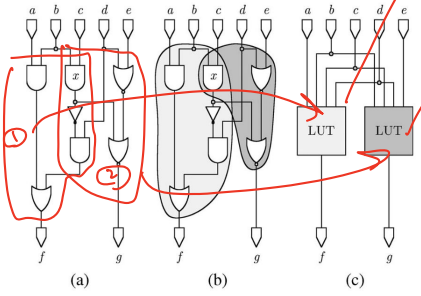

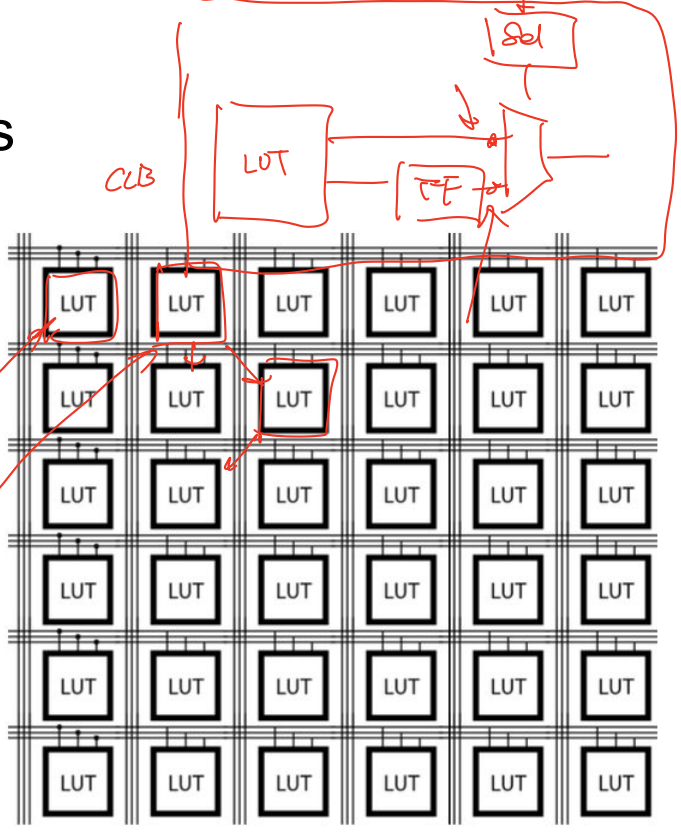

Implementing Functions with LUTs

If you can write a truth table for it (which you can with any combinational block), you can implement it with a single LUT!

- This does not necessarily mean you should implement all combinational functions with a single LUT:
- A combinational block with 64 inputs would require a LUT of 2^64 ≅ 1.84x1~~019~~ 10^{19} entries! Just storing all of the output bits would require 2305843 TB of data!

When would you want a 64 input combinational block? How about a 32 bit adder (32 bits for each input operand)

- There is likely a more efficient way of implementing a 64 input combinational block

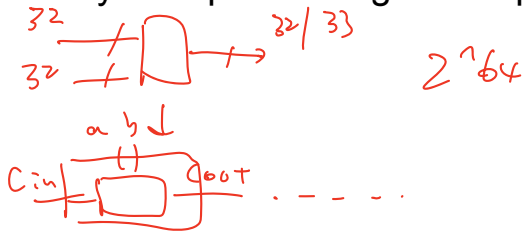

Building Larger LUTs

- With smaller LUTs
- Let's say we have 3 input LUTs, is there a way we could create a 4 input LUT?

3-input

D	C	B	A	Out
0	0	0	0	o1
0	0	0	1	o2
0	0	1	0	o3
0	0	1	1	o4
0	1	0	0	o5
0	1	0	1	o6
0	1	1	0	o7
0	1	1	1	o8
D	C	B	A	Out
1	0	0	0	o9
1	0	0	1	o10
1	0	1	0	o11
1	0	1	1	o12
1	1	0	0	o13
1	1	0	1	o14
1	1	1	0	o15
1	1	1	1	o16

Building Larger LUTs

- Consider a 4-input LUT
  - What the function is this?
- How to build this out of 3 input LUTs?
- Notice how the LUT depends on d – Can split into d = 0 and d = 1 halves – abc inputs look identical!

	D	C	B	A	Out
d=0	0	0	0	0	0
	0	0	0	1	1
	0	0	1	0	1
	0	0	1	1	0
	0	1	0	0	1
	0	1	0	1	0
	0	1	1	0	0
	0	1	1	1	1
	D	C	B	A	Out
d=1	1	0	0	0	1
	1	0	0	1	0
	1	0	1	0	0
	1	0	1	1	1
	1	1	0	0	0
	1	1	0	1	1
	1	1	1	0	1
	1	1	1	1	0

Building Larger LUTs

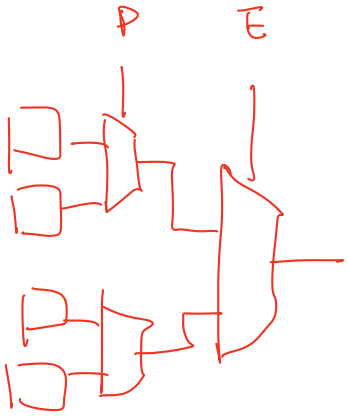

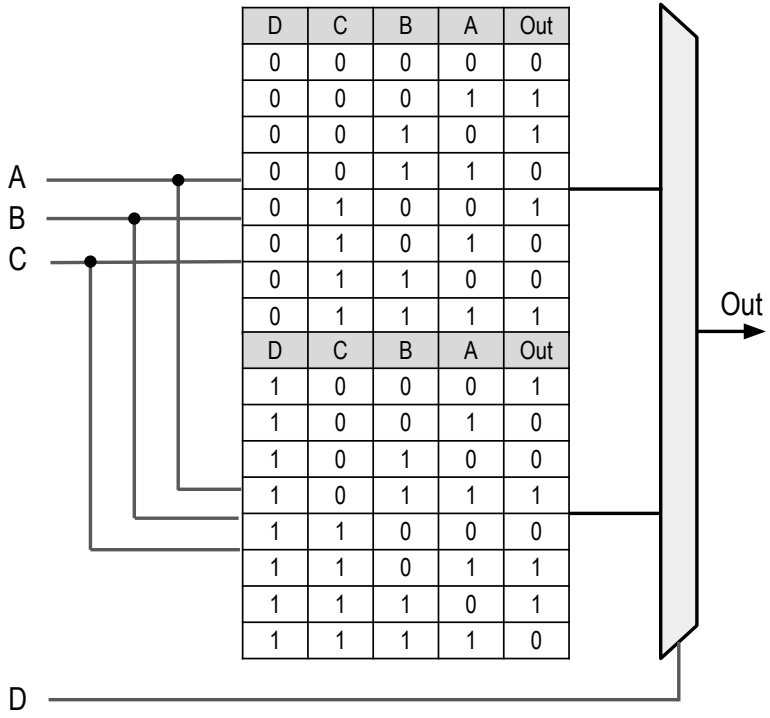

D	C	B	A	Out
0	0	0	0	0
0	0	0	1	1
0	0	1	0	1
0	0	1	1	0
0	1	0	0	1
0	1	0	1	0
0	1	1	0	0
0	1	1	1	1
D	C	B	A	Out
1	0	0	0	1
1	0	0	1	0
1	0	1	0	0
1	0	1	1	1
1	1	0	0	0
1	1	0	1	1
1	1	1	0	1
1	1	1	1	0