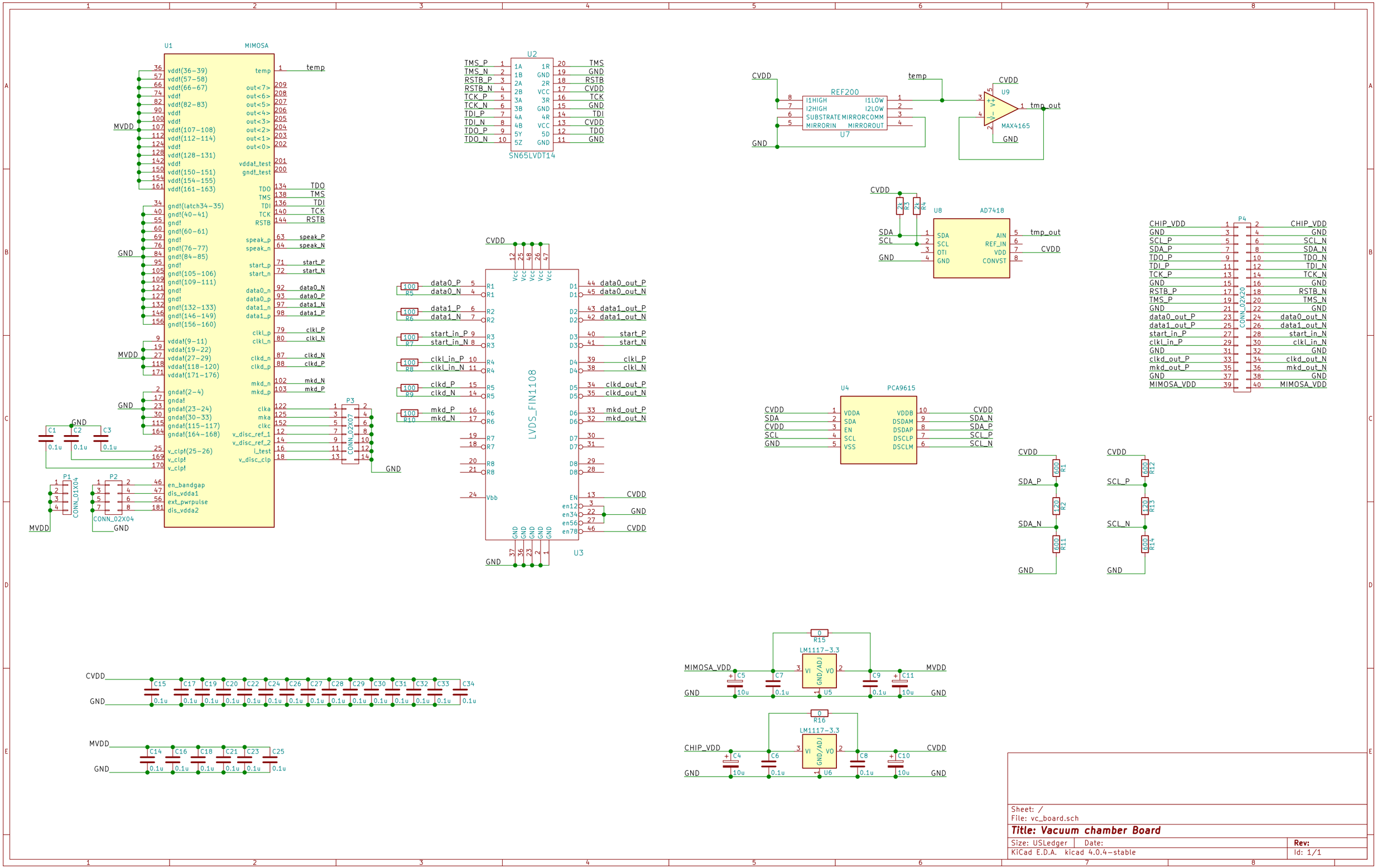

Sheet: /
File: vc_board.sch

Title: Vacuum chamber Board

Size: USLedger	Date:	Rev:
KiCad E.D.A. kicad 4.0.4-stable		Id: 1/1