WATER CONDITIONING

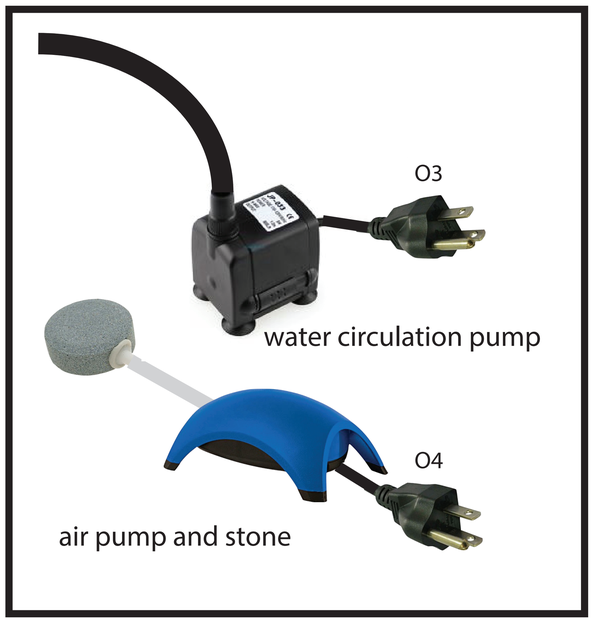

ENCLOSURE SENSING

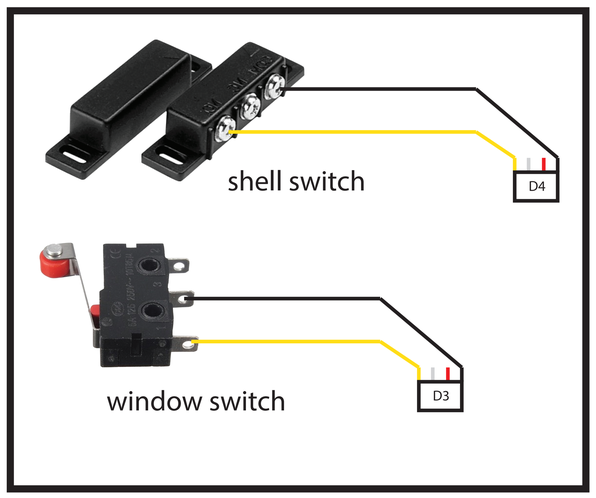

ENVIRONMENTAL SENSING

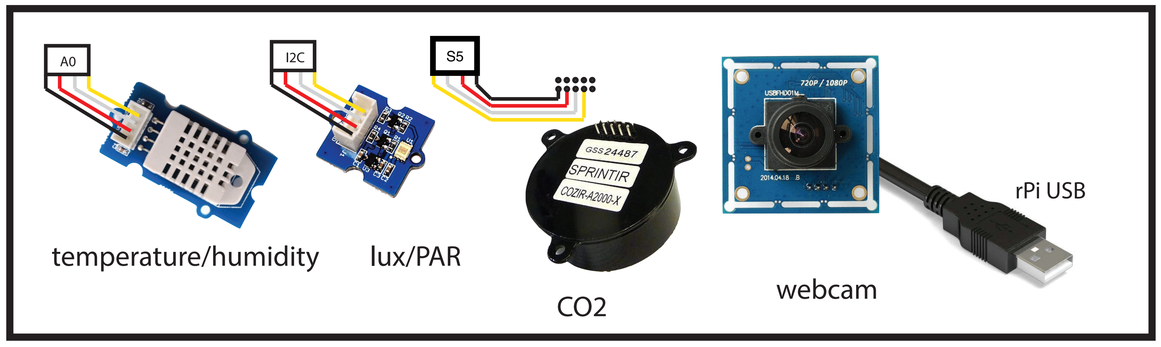

AIR CONDITIONING

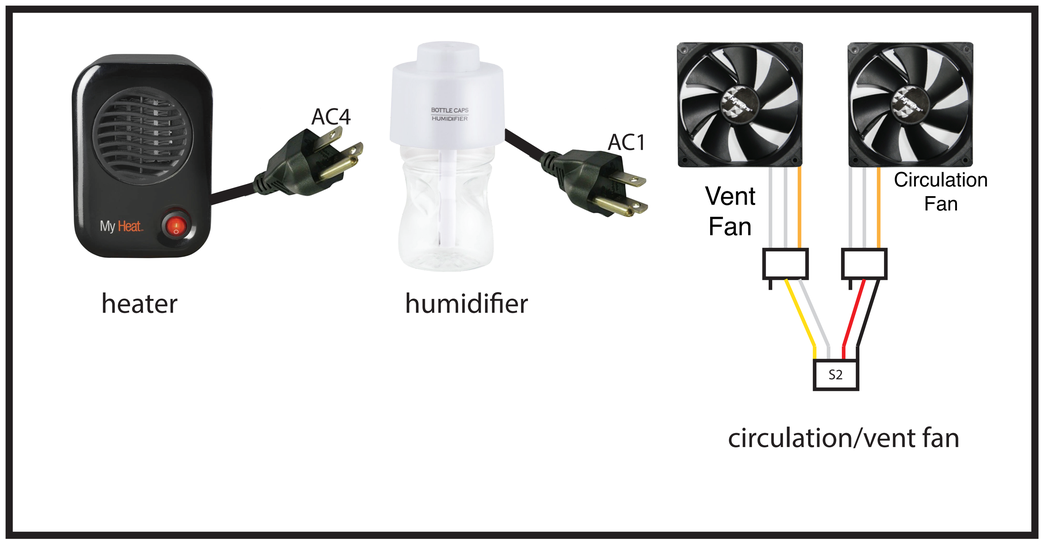

BRAINS

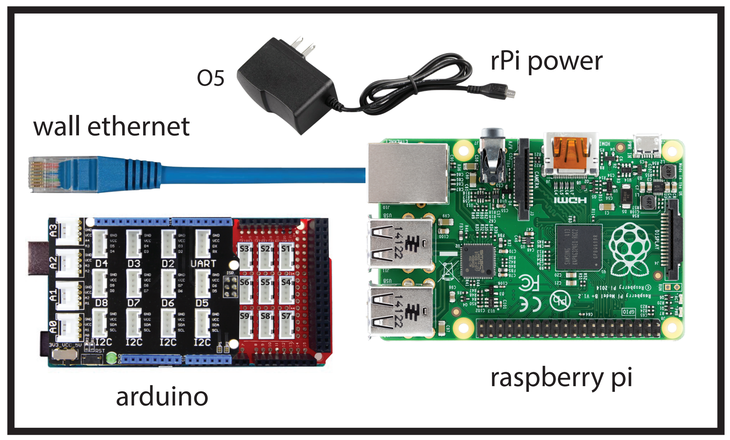

POWER

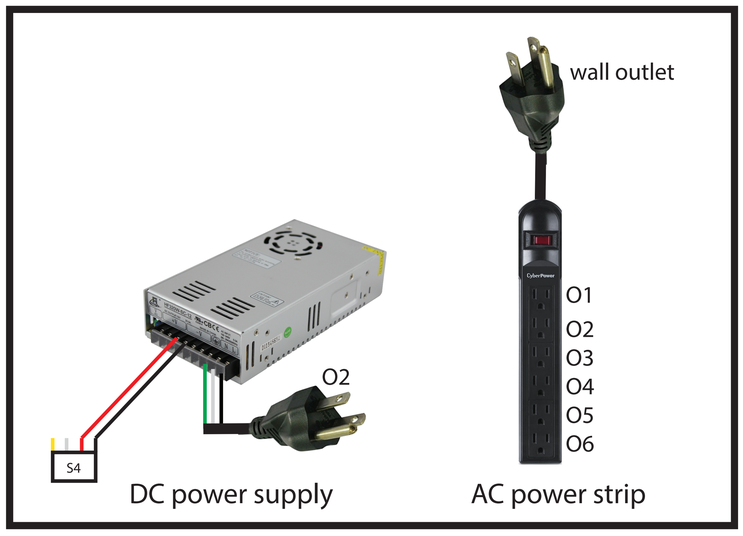

WATER SENSING

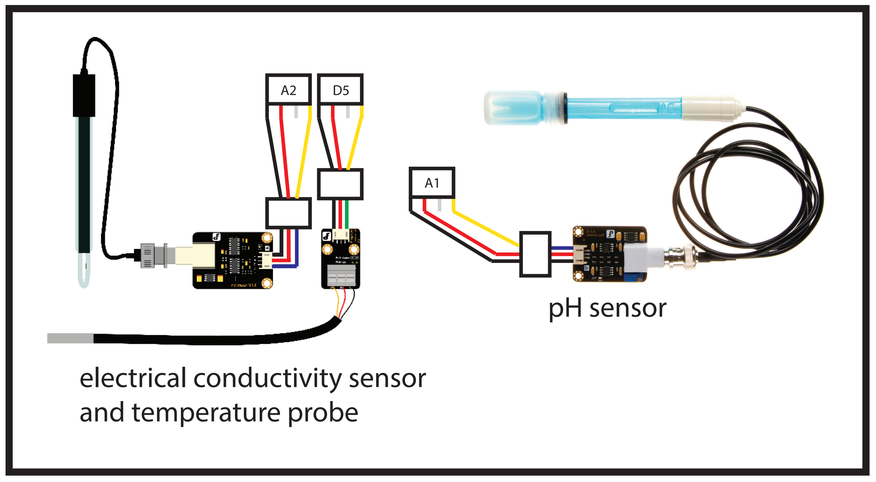

VOLTAGE CONTROL

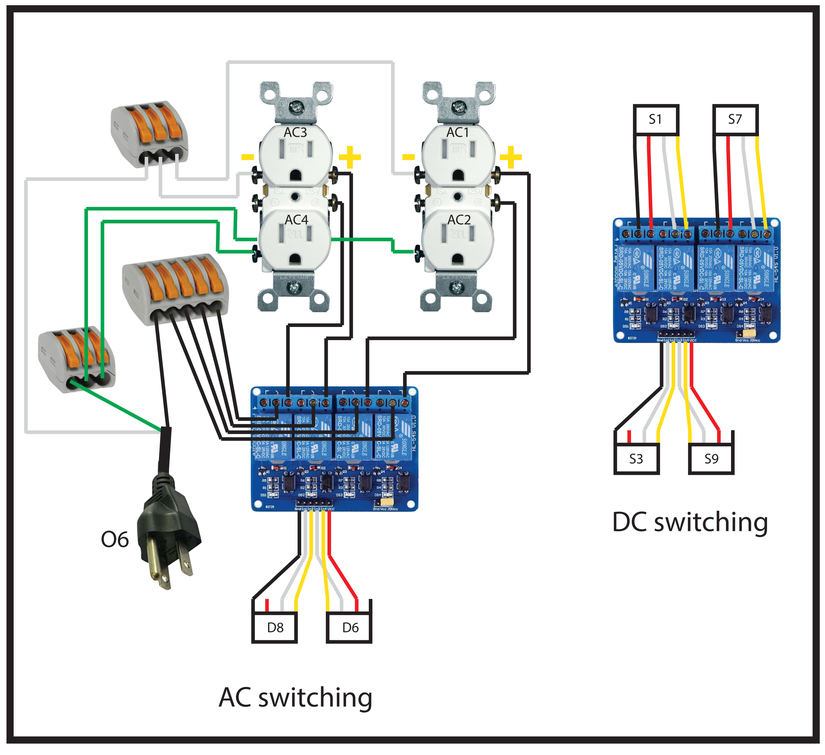
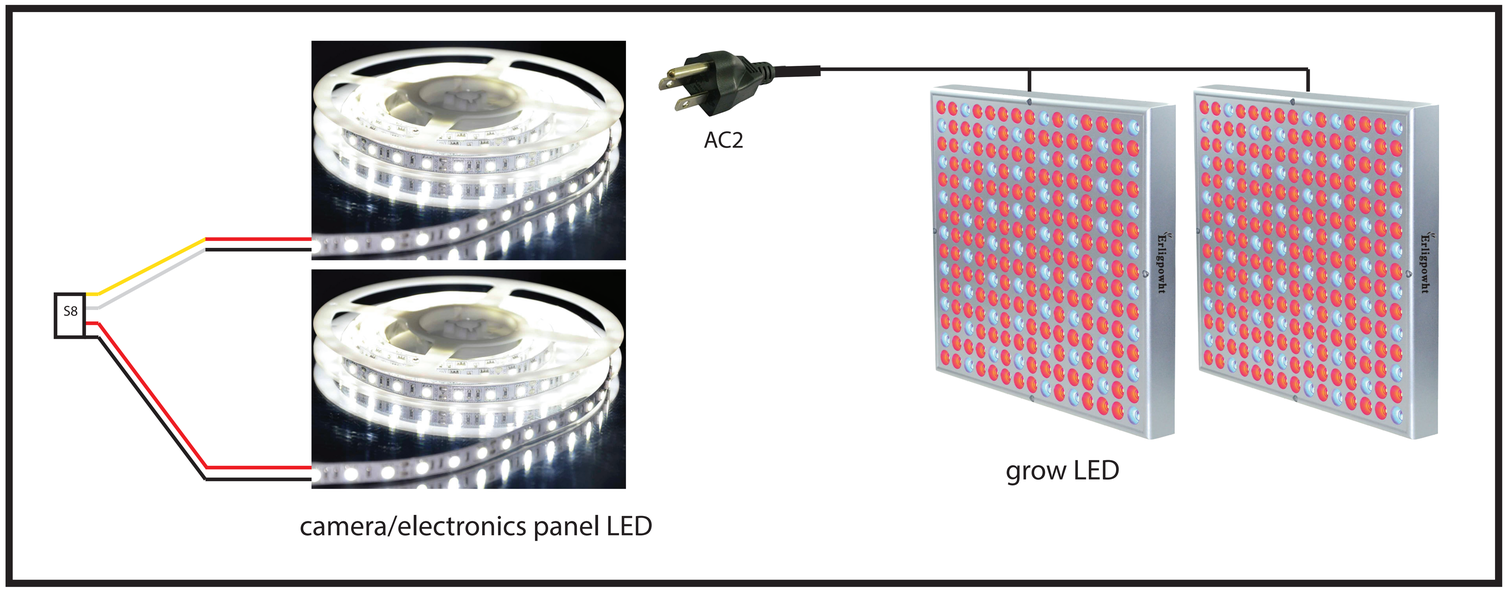
LIGHTS