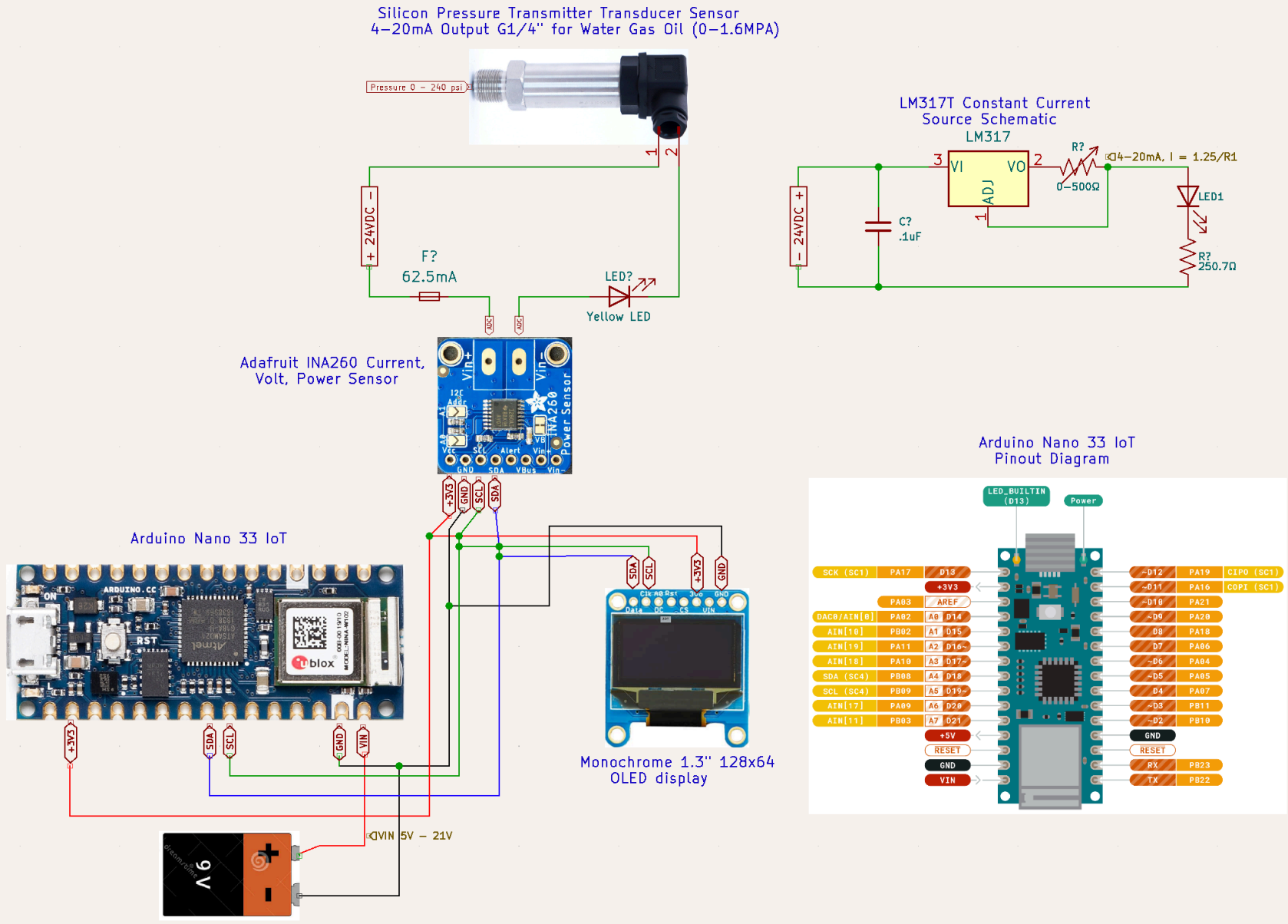
Silicon Pressure Transmitter Transducer Sensor
4–20mA Output G1/4" for Water Gas Oil (0–1.6MPA)
Pressure 0 – 240 psi
+ 24VDC –
F?
62.5mA
LED?
Yellow LED
LM317T Constant Current
Source Schematic
LM317
VI
VO
ADJ
R?
0–500Ω
4–20mA, I = 1.25/R1
LED1
R?
250.7Ω
C?
.1uF
– 24VDC +
Adafruit INA260 Current,
Volt, Power Sensor
INA260
Power Sensor
+3V3
GND
SCL
SDA
Arduino Nano 33 IoT
VIN
VIN 5V – 21V
9 V
Monochrome 1.3" 128x64
OLED display
Arduino Nano 33 IoT
Pinout Diagram
LED_BUILTIN
(D13)
Power
SCK (SC1) PA17 D13
+3V3
PA03 AREF
DAC0/AIN[0] PA02 A0 D14
AIN[10] PB02 A1 D15
AIN[19] PA11 A2 D16~
AIN[18] PA10 A3 D17~
SDA (SC4) PB08 A4 D18
SCL (SC4) PB09 A5 D19~
AIN[17] PA09 A6 D20
AIN[11] PB03 A7 D21
+5V
RESET
GND
VIN
~D12 PA19 CIPO (SC1)
~D11 PA16 COPI (SC1)
~D10 PA21
~D9 PA20
D8 PA18
D7 PA06
~D6 PA04
~D5 PA05
D4 PA07
~D3 PB11
~D2 PB10
GND
RESET
RX PB23
TX PB22