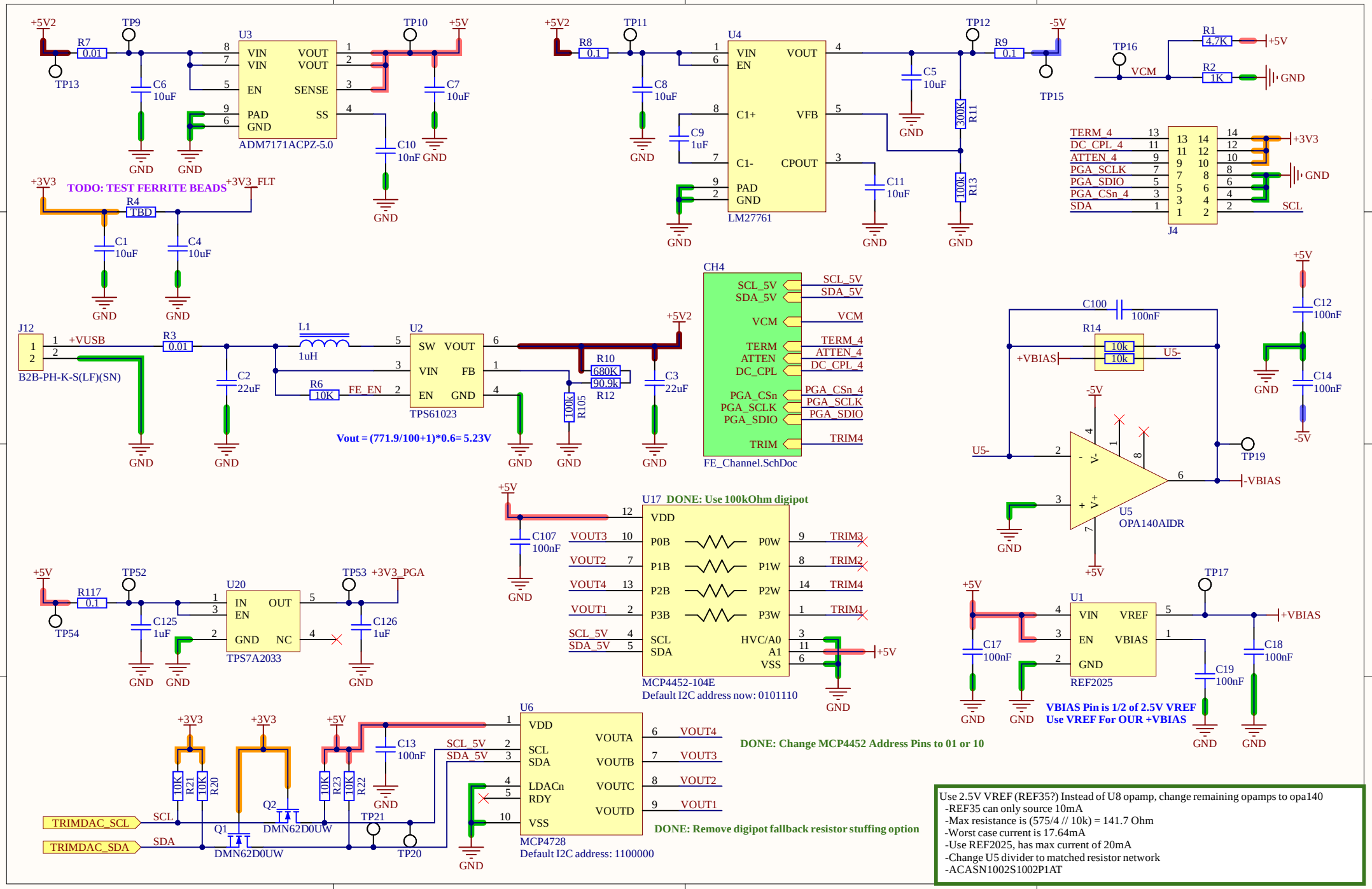
U3
ADM7171ACPZ-5.0
VIN VIN EN PAD GND
VOUT VOUT SENSE SS
+5V2 TP9 TP10 +5V TP13
R7 0.01
C6 10uF
C7 10uF
C10 10nF
GND
+3V3 TODO: TEST FERRITE BEADS +3V3_FLT
R4 TBD
C1 10uF
C4 10uF
U4
LM27761
VIN EN C1+ C1- PAD GND
VOUT VFB CPOUT
+5V2 TP11 TP12 -5V TP15
R8 0.1
R9 0.1
C8 10uF
C9 1uF
C5 10uF
C11 10uF
R11 300K
R13 100k
TP16 VCM
R1 4.7K
R2 1K
+5V
TERM_4 DC_CPL_4 ATTEN_4 PGA_SCLK PGA_SDIO PGA_CSn_4 SDA
J4
+3V3
SCL
J12
B2B-PH-K-S(LF)(SN)
+VUSB
R3 0.01
C2 22uF
L1 1uH
R6 10K
FE_EN
U2
TPS61023
SW VOUT VIN FB EN GND
R10 680K
R12 90.9k
R105 100k
C3 22uF
Vout = (771.9/100+1)*0.6= 5.23V
CH4
FE_Channel.SchDoc
SCL_5V SDA_5V VCM TERM ATTEN DC_CPL PGA_CSn PGA_SCLK PGA_SDIO TRIM
TRIM4
C100 100nF
R14 10k 10k
+VBIAS
U5-
-VBIAS
TP19
U5
OPA140AIDR
V- V+
C12 100nF
C14 100nF
+5V -5V
U17 DONE: Use 100kOhm digipot
MCP4452-104E
Default I2C address now: 0101110
VDD P0B P1B P2B P3B SCL SDA
P0W P1W P2W P3W HVC/A0 A1 VSS
VOUT3 VOUT2 VOUT4 VOUT1 SCL_5V SDA_5V
TRIM3 TRIM2 TRIM4 TRIM1
C107 100nF
+5V
U20
TPS7A2033
IN EN GND OUT NC
R117 0.1
TP52 TP53 +3V3_PGA TP54
C125 1uF
C126 1uF
U1
REF2025
VIN EN GND VREF VBIAS
TP17
C17 100nF
C18 100nF
C19 100nF
VBIAS Pin is 1/2 of 2.5V VREF
Use VREF For OUR +VBIAS
U6
MCP4728
Default I2C address: 1100000
VDD SCL SDA LDACn RDY VSS
VOUTA VOUTB VOUTC VOUTD
VOUT4 VOUT3 VOUT2 VOUT1
DONE: Change MCP4452 Address Pins to 01 or 10
DONE: Remove digipot fallback resistor stuffing option
R21 10K R20 10K
R23 10K R22 10K
C13 100nF
Q1 DMN62D0UW
Q2 DMN62D0UW
TRIMDAC_SCL
TRIMDAC_SDA
TP20 TP21
Use 2.5V VREF (REF35?) Instead of U8 opamp, change remaining opamps to opa140
-REF35 can only source 10mA
-Max resistance is (575/4 // 10k) = 141.7 Ohm
-Worst case current is 17.64mA
-Use REF2025, has max current of 20mA
-Change U5 divider to matched resistor network
-ACASN1002S1002P1AT

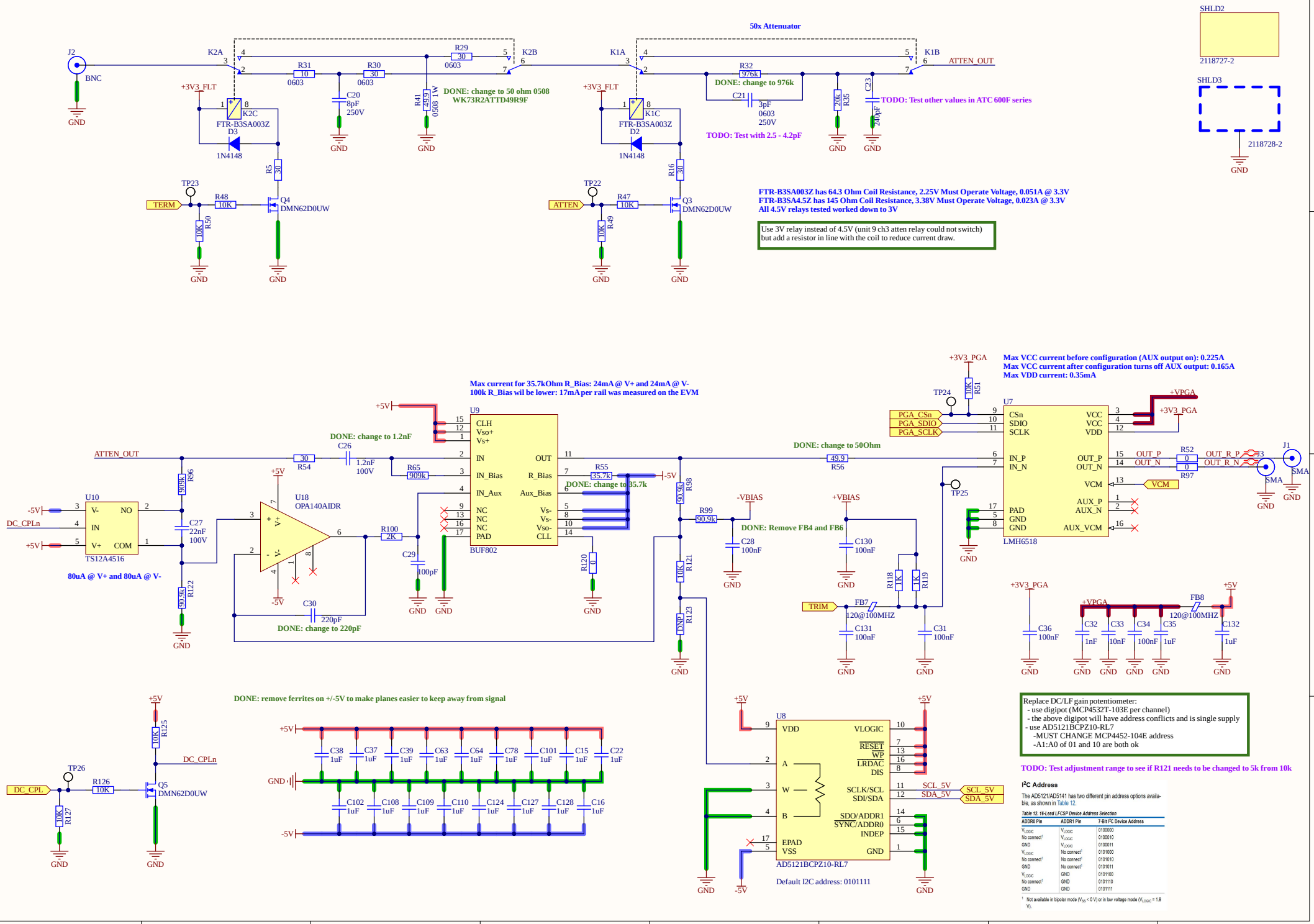
50x Attenuator
J2
BNC
GND
K2A
K2B
K1A
K1B
R29
30
0603
R31
10
0603
R30
30
0603
C20
8pF
250V
R41
49.9
0508 1W
DONE: change to 50 ohm 0508
WK73R2ATTD49R9F
+3V3_FLT
K2C
FTR-B3SA003Z
D3
1N4148
R5
30
TP23
TERM
R48
10K
Q4
DMN62D0UW
R50
10K
R32
976k
DONE: change to 976k
C21
3pF
0603
250V
TODO: Test with 2.5 - 4.2pF
20k
R35
C23
240pF
TODO: Test other values in ATC 600F series
ATTEN_OUT
K1C
D2
R16
30
TP22
ATTEN
R47
10K
Q3
DMN62D0UW
R49
10K
FTR-B3SA003Z has 64.3 Ohm Coil Resistance, 2.25V Must Operate Voltage, 0.051A @ 3.3V
FTR-B3SA4.5Z has 145 Ohm Coil Resistance, 3.38V Must Operate Voltage, 0.023A @ 3.3V
All 4.5V relays tested worked down to 3V
Use 3V relay instead of 4.5V (unit 9 ch3 atten relay could not switch)
but add a resistor in line with the coil to reduce current draw.
SHLD2
2118727-2
SHLD3
2118728-2
Max current for 35.7kOhm R_Bias: 24mA @ V+ and 24mA @ V-
100k R_Bias wil be lower: 17mA per rail was measured on the EVM
+5V
U9
CLH
Vso+
Vs+
IN
IN_Bias
IN_Aux
NC
NC
NC
PAD
OUT
R_Bias
Aux_Bias
Vs-
Vs-
Vso-
CLL
BUF802
DONE: change to 1.2nF
C26
1.2nF
100V
R54
30
R65
909k
R55
35.7k
DONE: change to 35.7k
-5V
R120
0
ATTEN_OUT
R96
909k
U10
V-
NO
IN
V+
COM
TS12A4516
-5V
DC_CPLn
+5V
C27
22nF
100V
80uA @ V+ and 80uA @ V-
R122
90.9k
U18
OPA140AIDR
R100
2K
C29
100pF
C30
220pF
DONE: change to 220pF
R98
90.9k
R99
90.9k
R121
10K
DNP
R123
DONE: change to 50Ohm
R56
49.9
-VBIAS
C28
100nF
DONE: Remove FB4 and FB6
+VBIAS
C130
100nF
R118
1K
R119
1K
TRIM
FB7
120@100MHZ
C131
100nF
C31
100nF
+3V3_PGA
TP24
R51
10K
PGA_CSn
PGA_SDIO
PGA_SCLK
U7
CSn
SDIO
SCLK
IN_P
IN_N
PAD
GND
GND
VCC
VCC
VDD
OUT_P
OUT_N
VCM
AUX_P
AUX_N
AUX_VCM
LMH6518
+VPGA
+3V3_PGA
Max VCC current before configuration (AUX output on): 0.225A
Max VCC current after configuration turns off AUX output: 0.165A
Max VDD current: 0.35mA
TP25
OUT_P
OUT_N
R52
0
R97
0
OUT_R_P
OUT_R_N
J1
SMA
VCM
+3V3_PGA
C36
100nF
+VPGA
C32
1nF
C33
10nF
C34
100nF
C35
1uF
FB8
120@100MHZ
+5V
C132
1uF
DONE: remove ferrites on +/-5V to make planes easier to keep away from signal
C38 C37 C39 C63 C64 C78 C101 C15 C22
1uF
C102 C108 C109 C110 C124 C127 C128 C16
1uF
TP26
DC_CPL
R126
10K
R127
10K
R125
10K
Q5
DMN62D0UW
DC_CPLn
U8
VDD
A
W
B
EPAD
VSS
VLOGIC
RESET
WP
LRDAC
DIS
SCLK/SCL
SDI/SDA
SDO/ADDR1
SYNC/ADDR0
INDEP
GND
AD5121BCPZ10-RL7
Default I2C address: 0101111
SCL_5V
SDA_5V
Replace DC/LF gain potentiometer:
- use digipot (MCP4532T-103E per channel)
- the above digipot will have address conflicts and is single supply
- use AD5121BCPZ10-RL7
-MUST CHANGE MCP4452-104E address
-A1:A0 of 01 and 10 are both ok
TODO: Test adjustment range to see if R121 needs to be changed to 5k from 10k
I2C Address
The AD5121/AD5141 has two different pin address options available, as shown in Table 12.
Table 12. 16-Lead LFCSP Device Address Selection
ADDR0 Pin | ADDR1 Pin | 7-Bit I2C Device Address
VLOGIC | VLOGIC | 0100000
No connect1 | VLOGIC | 0100010
GND | VLOGIC | 0100011
VLOGIC | No connect1 | 0101000
No connect1 | No connect1 | 0101010
GND | No connect1 | 0101011
VLOGIC | GND | 0101100
No connect1 | GND | 0101110
GND | GND | 0101111
1 Not available in bipolar mode (VSS < 0 V) or in low voltage mode (VLOGIC = 1.8 V).