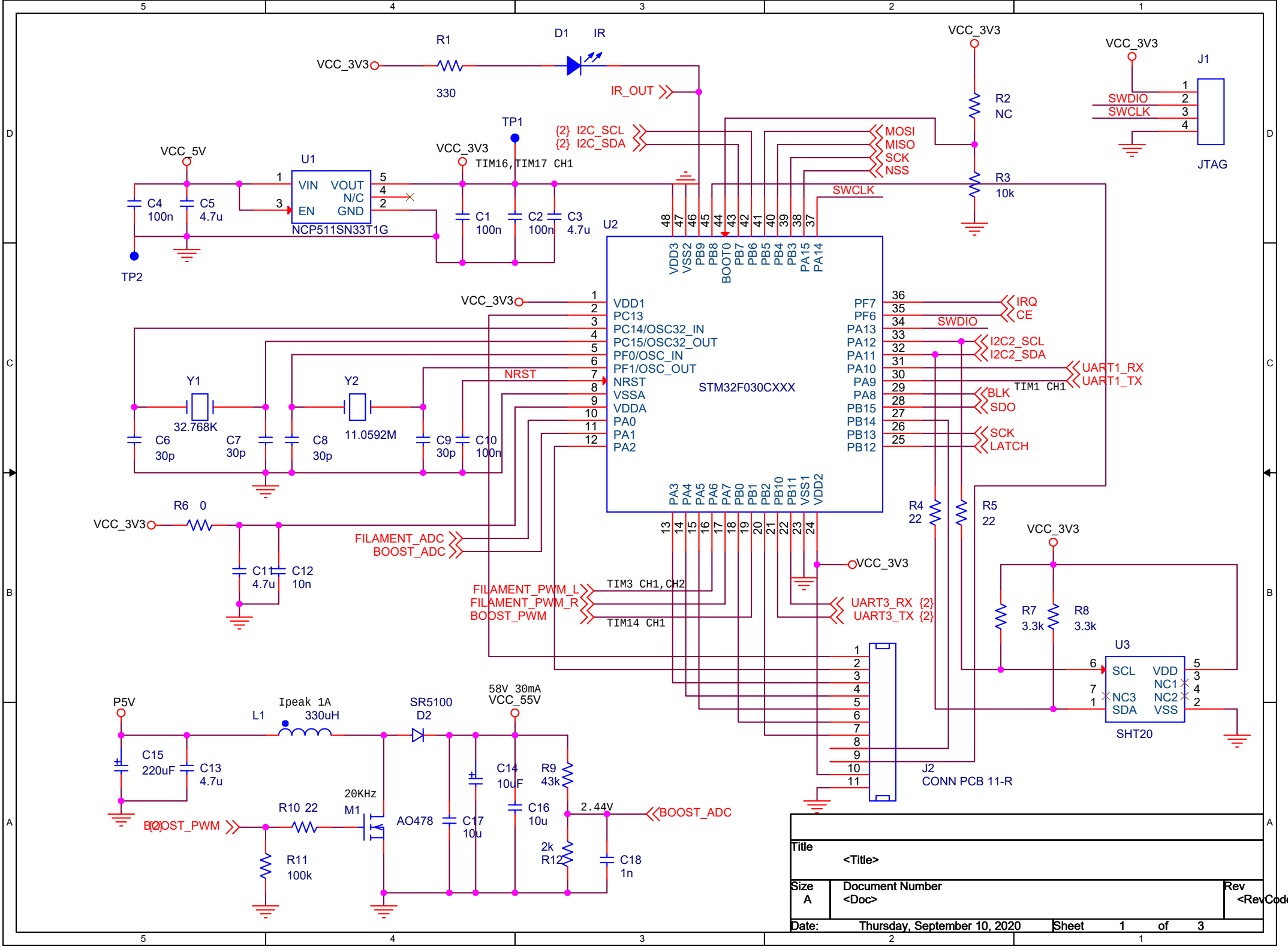
VCC_3V3
R1
330
D1
IR
IR_OUT
VCC_3V3
R2
NC
R3
10k
VCC_3V3
J1
SWDIO
SWCLK
JTAG
VCC_5V
U1
VIN
VOUT
N/C
EN
GND
NCP511SN33T1G
C4
100n
C5
4.7u
TP2
TP1
VCC_3V3
TIM16,TIM17 CH1
C1
100n
C2
100n
C3
4.7u
{2} I2C_SCL
{2} I2C_SDA
MOSI
MISO
SCK
NSS
SWCLK
U2
STM32F030CXXX
VDD3
VSS2
PB9
PB8
BOOT0
PB7
PB6
PB5
PB4
PB3
PA15
PA14
VDD1
PC13
PC14/OSC32_IN
PC15/OSC32_OUT
PF0/OSC_IN
PF1/OSC_OUT
NRST
VSSA
VDDA
PA0
PA1
PA2
PF7
PF6
PA13
PA12
PA11
PA10
PA9
PA8
PB15
PB14
PB13
PB12
IRQ
CE
SWDIO
I2C2_SCL
I2C2_SDA
UART1_RX
UART1_TX
TIM1 CH1
BLK
SDO
SCK
LATCH
PA3
PA4
PA5
PA6
PA7
PB0
PB1
PB2
PB10
PB11
VSS1
VDD2
Y1
32.768K
C6
30p
C7
30p
Y2
11.0592M
C8
30p
C9
30p
C10
100n
R6 0
VCC_3V3
C11
4.7u
C12
10n
FILAMENT_ADC
BOOST_ADC
FILAMENT_PWM_L
FILAMENT_PWM_R
BOOST_PWM
TIM3 CH1,CH2
TIM14 CH1
UART3_RX {2}
UART3_TX {2}
R4
22
R5
22
VCC_3V3
R7
3.3k
R8
3.3k
U3
SCL
VDD
NC1
NC3
NC2
SDA
VSS
SHT20
J2
CONN PCB 11-R
P5V
C15
220uF
C13
4.7u
L1
Ipeak 1A
330uH
SR5100
D2
58V 30mA
VCC_55V
C14
10uF
R9
43k
C16
10u
2.44V
BOOST_ADC
20KHz
M1
AO478
C17
10u
R10 22
{2} BOOST_PWM
R11
100k
2k
R12
C18
1n
Title
<Title>
Size
A
Document Number
<Doc>
Rev
<RevCode>
Date:
Thursday, September 10, 2020
Sheet
1
of
3

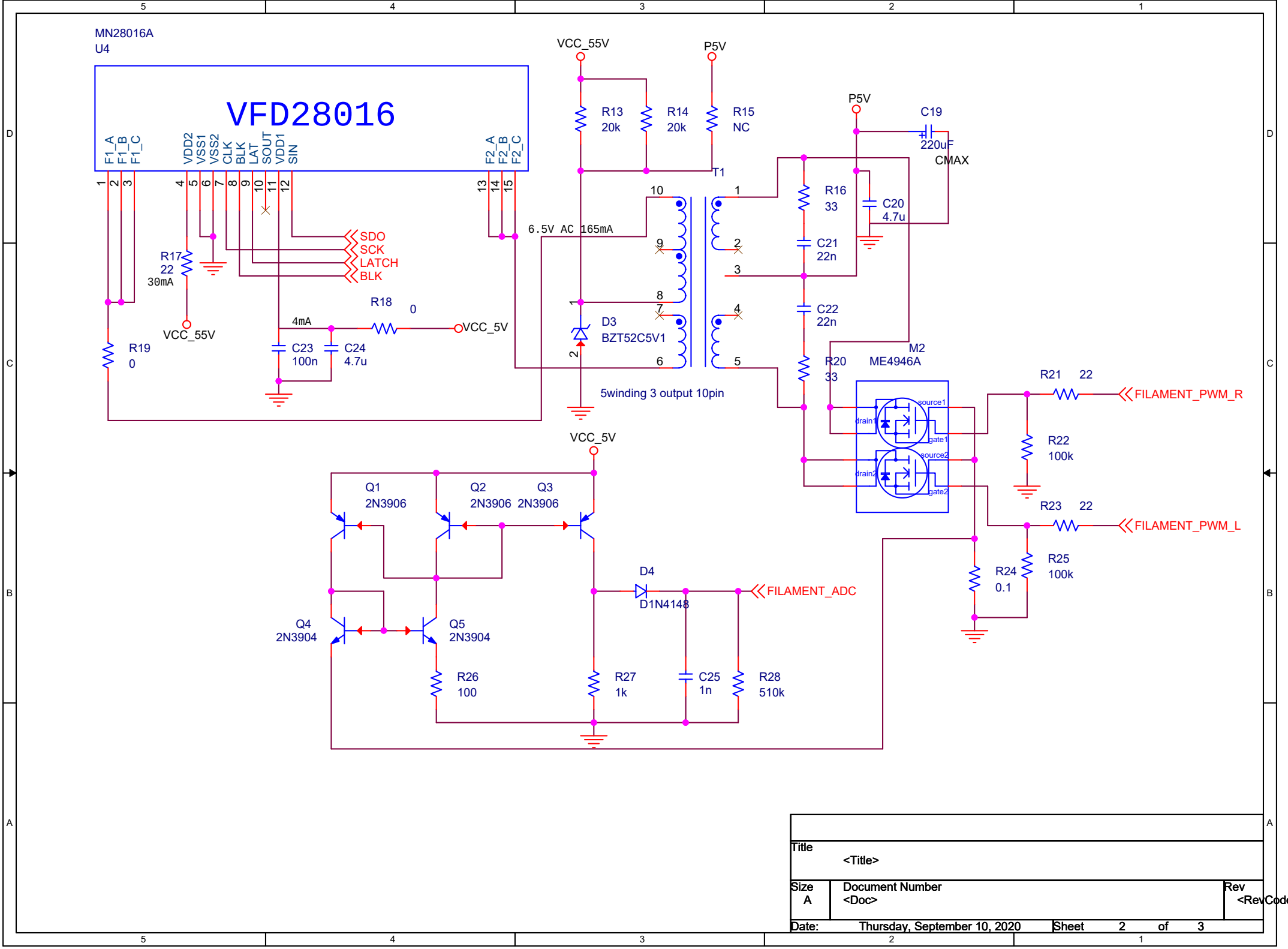

Title	<Title>	
Size A	Document Number <Doc>	Rev <RevCode>
Date: Thursday, September 10, 2020	Sheet 2 of 3	

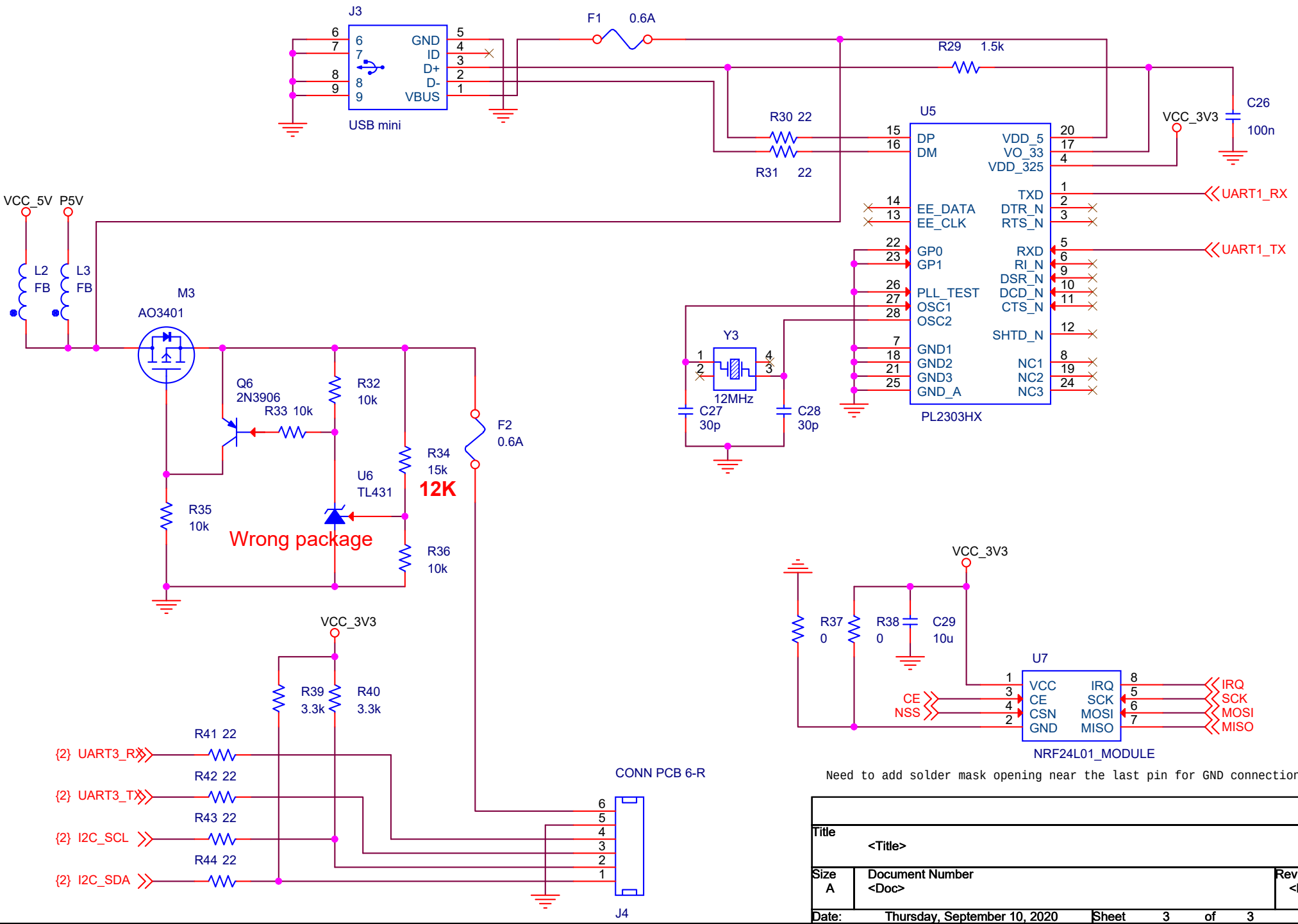

Title	<Title>	
Size A	Document Number <Doc>	Rev <RevCode>
Date: Thursday, September 10, 2020	Sheet 3 of 3	