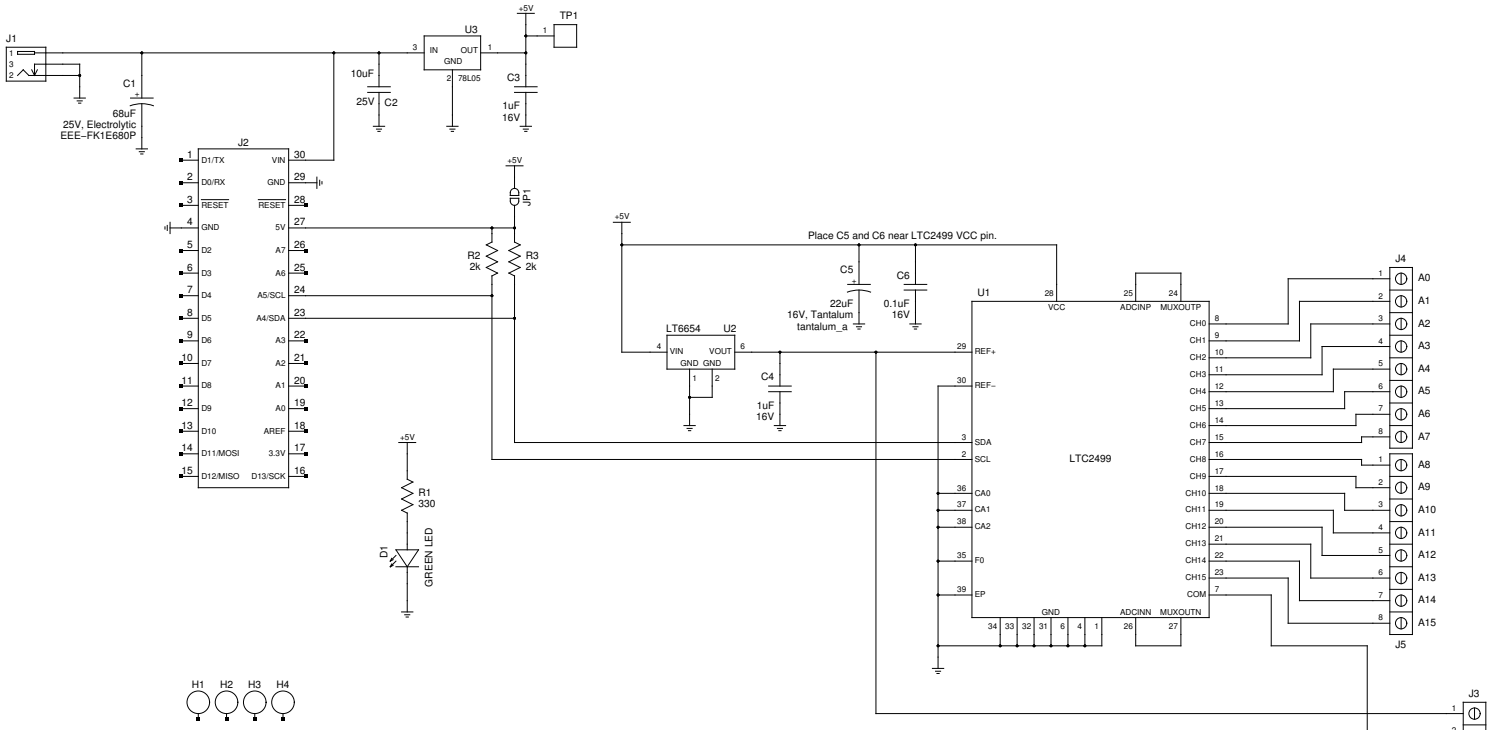

TITLE	LTC2499 Arduino Shield
FILE: ard-ltc2499.sch	REVISION: $Revision$
PAGE 1 OF 1	DRAWN BY: Michael Petersen