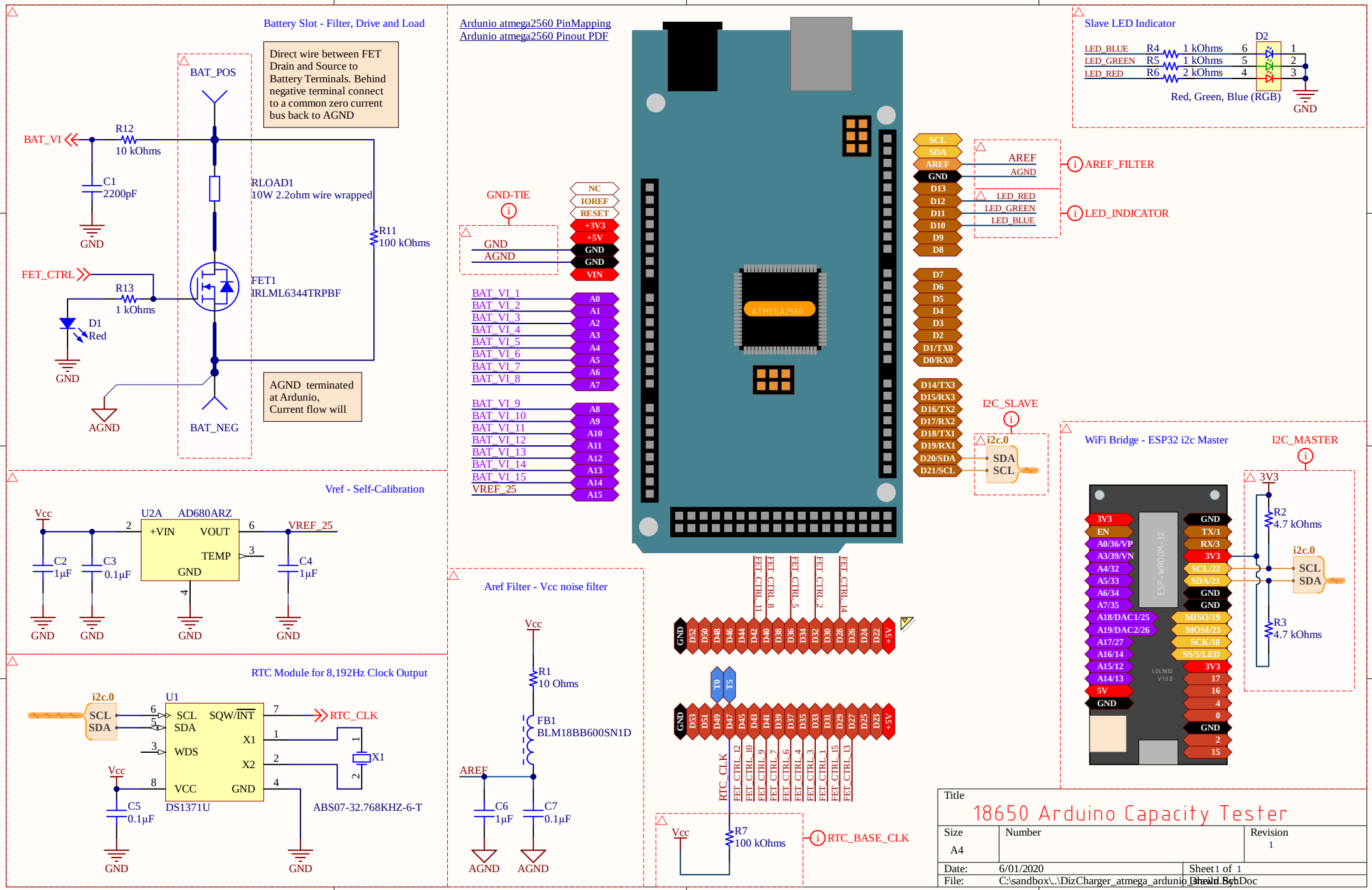
Battery Slot - Filter, Drive and Load
Direct wire between FET Drain and Source to Battery Terminals. Behind negative terminal connect to a common zero current bus back to AGND
BAT_POS
BAT_VI
R12
10 kOhms
C1
2200pF
GND
RLOAD1
10W 2.2ohm wire wrapped
R11
100 kOhms
FET_CTRL
R13
1 kOhms
FET1
IRLML6344TRPBF
D1
Red
GND
AGND
BAT_NEG
AGND terminated at Ardunio, Current flow will
Vref - Self-Calibration
Vcc
U2A
AD680ARZ
+VIN
VOUT
TEMP
GND
VREF_25
C2
1µF
C3
0.1µF
C4
1µF
GND
RTC Module for 8,192Hz Clock Output
i2c.0
SCL
SDA
U1
SQW/INT
WDS
X1
X2
VCC
GND
DS1371U
RTC_CLK
ABS07-32.768KHZ-6-T
C5
0.1µF
Ardunio atmega2560 PinMapping
Ardunio atmega2560 Pinout PDF
GND-TIE
GND
AGND
NC
IOREF
RESET
+3V3
+5V
GND
GND
VIN
BAT_VI_1
BAT_VI_2
BAT_VI_3
BAT_VI_4
BAT_VI_5
BAT_VI_6
BAT_VI_7
BAT_VI_8
BAT_VI_9
BAT_VI_10
BAT_VI_11
BAT_VI_12
BAT_VI_13
BAT_VI_14
BAT_VI_15
VREF_25
A0
A1
A2
A3
A4
A5
A6
A7
A8
A9
A10
A11
A12
A13
A14
A15
ATMEGA2560
SCL
SDA
AREF
GND
D13
D12
D11
D10
D9
D8
D7
D6
D5
D4
D3
D2
D1/TX0
D0/RX0
D14/TX3
D15/RX3
D16/TX2
D17/RX2
D18/TX1
D19/RX1
D20/SDA
D21/SCL
AREF
AGND
AREF_FILTER
LED_RED
LED_GREEN
LED_BLUE
LED_INDICATOR
I2C_SLAVE
i2c.0
SDA
SCL
Slave LED Indicator
LED_BLUE
LED_GREEN
LED_RED
R4
R5
R6
1 kOhms
1 kOhms
2 kOhms
D2
Red, Green, Blue (RGB)
GND
WiFi Bridge - ESP32 i2c Master
I2C_MASTER
3V3
R2
4.7 kOhms
R3
4.7 kOhms
i2c.0
SCL
SDA
ESP-WROOM-32
3V3
EN
A0/36/VP
A3/39/VN
A4/32
A5/33
A6/34
A7/35
A18/DAC1/25
A19/DAC2/26
A17/27
A16/14
A15/12
A14/13
5V
GND
GND
TX/1
RX/3
3V3
SCL/22
SDA/21
GND
GND
MISO/19
MOSI/23
SCK/18
SS/5/LED
3V3
17
16
4
0
GND
2
15
Aref Filter - Vcc noise filter
Vcc
R1
10 Ohms
FB1
BLM18BB600SN1D
AREF
C6
1µF
C7
0.1µF
AGND
AGND
FET_CTRL_11
FET_CTRL_8
FET_CTRL_5
FET_CTRL_2
FET_CTRL_14
GND D52 D50 D48 D46 D44 D42 D40 D38 D36 D34 D32 D30 D28 D26 D24 D22 +5V
T0 T5
GND D53 D51 D49 D47 D45 D43 D41 D39 D37 D35 D33 D31 D29 D27 D25 D23 +5V
RTC_CLK
FET_CTRL_12
FET_CTRL_10
FET_CTRL_9
FET_CTRL_7
FET_CTRL_6
FET_CTRL_4
FET_CTRL_3
FET_CTRL_1
FET_CTRL_15
FET_CTRL_13
Vcc
R7
100 kOhms
RTC_BASE_CLK
Title
18650 Arduino Capacity Tester
Size
A4
Number
Revision
1
Date: 6/01/2020
Sheet 1 of 1
File: C:\sandbox\..\DizCharger_atmega_arduino_board.SchDoc