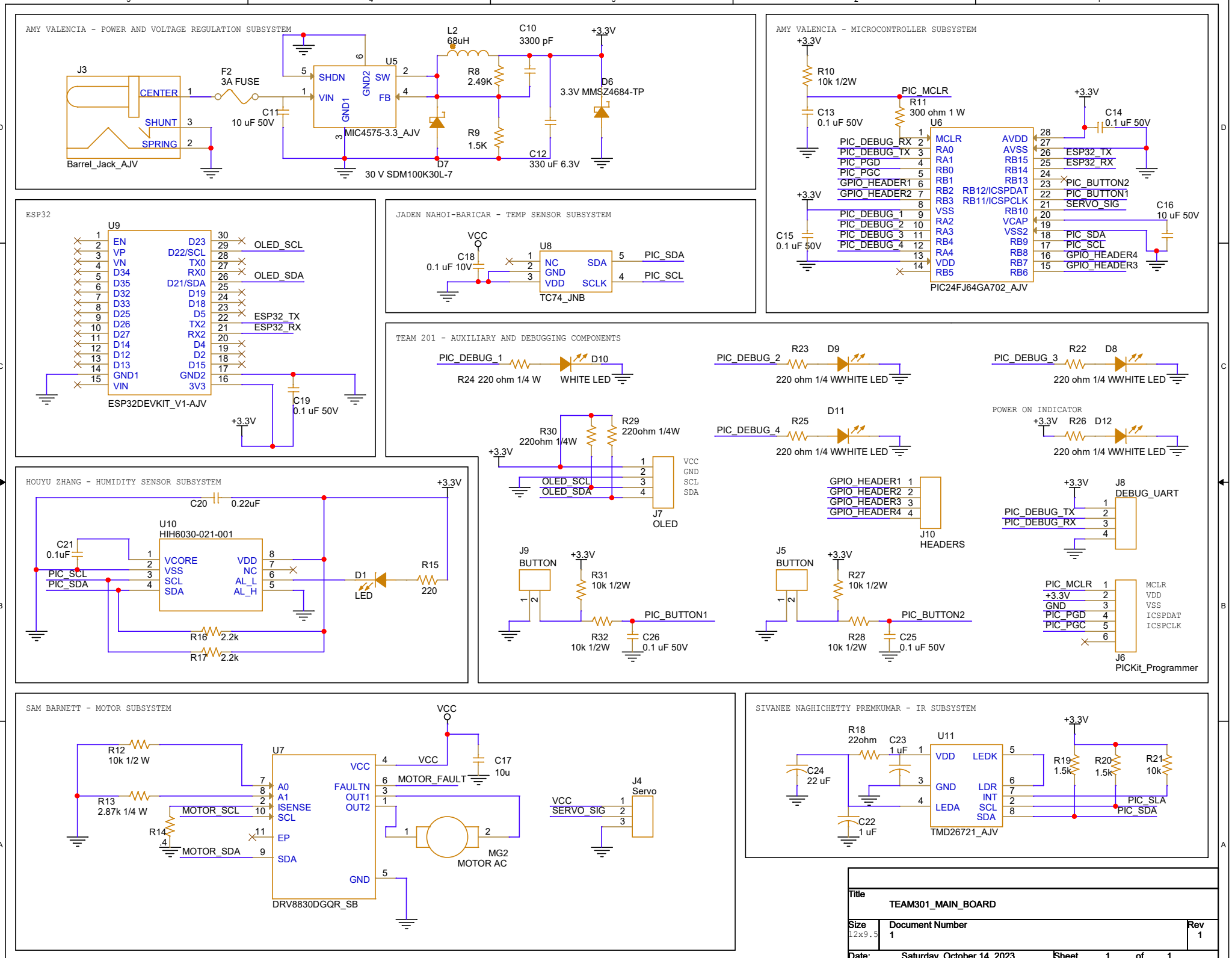
AMY VALENCIA - POWER AND VOLTAGE REGULATION SUBSYSTEM
J3
CENTER
SHUNT
SPRING
Barrel_Jack_AJV
F2
3A FUSE
C11
10 uF 50V
U5
SHDN
VIN
GND1
GND2
SW
FB
MIC4575-3.3_AJV
L2
68uH
R8
2.49K
R9
1.5K
C10
3300 pF
C12
330 uF 6.3V
+3.3V
D6
3.3V MMSZ4684-TP
D7
30 V SDM100K30L-7
AMY VALENCIA - MICROCONTROLLER SUBSYSTEM
R10
10k 1/2W
C13
0.1 uF 50V
PIC_MCLR
R11
300 ohm 1 W
U6
C14
0.1 uF 50V
C15
0.1 uF 50V
C16
10 uF 50V
PIC_DEBUG_RX
PIC_DEBUG_TX
PIC_PGD
PIC_PGC
GPIO_HEADER1
GPIO_HEADER2
PIC_DEBUG_1
PIC_DEBUG_2
PIC_DEBUG_3
PIC_DEBUG_4
MCLR
RA0
RA1
RB0
RB1
RB2
RB3
VSS
RA2
RA3
RB4
RA4
VDD
RB5
AVDD
AVSS
RB15
RB14
RB13
RB12/ICSPDAT
RB11/ICSPCLK
RB10
VCAP
VSS2
RB9
RB8
RB7
RB6
ESP32_TX
ESP32_RX
PIC_BUTTON2
PIC_BUTTON1
SERVO_SIG
PIC_SDA
PIC_SCL
GPIO_HEADER4
GPIO_HEADER3
PIC24FJ64GA702_AJV
ESP32
U9
EN
VP
VN
D34
D35
D32
D33
D25
D26
D27
D14
D12
D13
GND1
VIN
D23
D22/SCL
TX0
RX0
D21/SDA
D19
D18
D5
TX2
RX2
D4
D2
D15
GND2
3V3
OLED_SCL
OLED_SDA
ESP32_TX
ESP32_RX
ESP32DEVKIT_V1-AJV
C19
0.1 uF 50V
JADEN NAHOI-BARICAR - TEMP SENSOR SUBSYSTEM
VCC
C18
0.1 uF 10V
U8
NC
GND
VDD
SDA
SCLK
PIC_SDA
PIC_SCL
TC74_JNB
TEAM 201 - AUXILIARY AND DEBUGGING COMPONENTS
PIC_DEBUG_1
R24 220 ohm 1/4 W
D10
WHITE LED
PIC_DEBUG_2
R23
D9
220 ohm 1/4 WWHITE LED
PIC_DEBUG_3
R22
D8
220 ohm 1/4 WWHITE LED
PIC_DEBUG_4
R25
D11
220 ohm 1/4 WWHITE LED
POWER ON INDICATOR
R26
D12
220 ohm 1/4 WWHITE LED
R30
220ohm 1/4W
R29
220ohm 1/4W
OLED_SCL
OLED_SDA
VCC
GND
SCL
SDA
J7
OLED
GPIO_HEADER1
GPIO_HEADER2
GPIO_HEADER3
GPIO_HEADER4
J10
HEADERS
J8
DEBUG_UART
PIC_DEBUG_TX
PIC_DEBUG_RX
J9
BUTTON
R31
10k 1/2W
R32
10k 1/2W
C26
0.1 uF 50V
PIC_BUTTON1
J5
BUTTON
R27
10k 1/2W
R28
10k 1/2W
C25
0.1 uF 50V
PIC_BUTTON2
PIC_MCLR
GND
PIC_PGD
PIC_PGC
MCLR
VDD
VSS
ICSPDAT
ICSPCLK
J6
PICKit_Programmer
HOUYU ZHANG - HUMIDITY SENSOR SUBSYSTEM
C20
0.22uF
U10
HIH6030-021-001
C21
0.1uF
VCORE
VSS
SCL
SDA
VDD
NC
AL_L
AL_H
PIC_SCL
PIC_SDA
D1
LED
R15
220
R16
2.2k
R17
2.2k
SAM BARNETT - MOTOR SUBSYSTEM
R12
10k 1/2 W
R13
2.87k 1/4 W
R14
4
U7
A0
A1
ISENSE
SCL
EP
SDA
VCC
FAULTN
OUT1
OUT2
GND
MOTOR_SCL
MOTOR_SDA
MOTOR_FAULT
C17
10u
MG2
MOTOR AC
J4
Servo
SERVO_SIG
DRV8830DGQR_SB
SIVANEE NAGHICHETTY PREMKUMAR - IR SUBSYSTEM
R18
22ohm
C23
1 uF
C24
22 uF
C22
1 uF
U11
VDD
GND
LEDA
LEDK
LDR
INT
SCL
SDA
R19
1.5k
R20
1.5k
R21
10k
PIC_SLA
PIC_SDA
TMD26721_AJV
Title
TEAM301_MAIN_BOARD
Size
12x9.5
Document Number
1
Rev
1
Date:
Saturday, October 14, 2023
Sheet
1
of
1