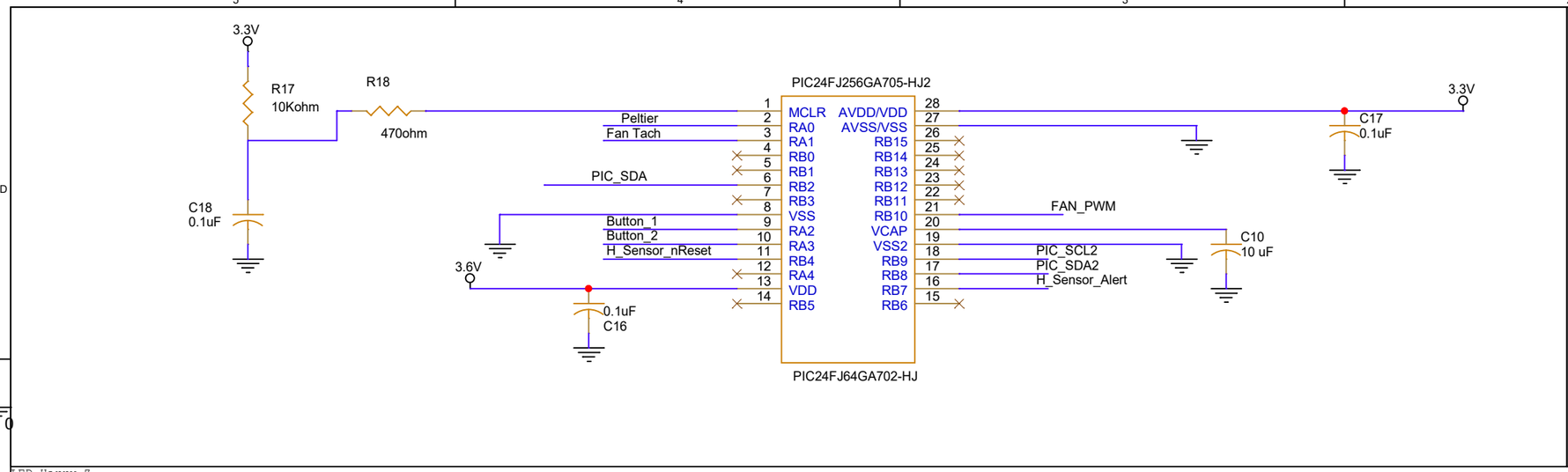

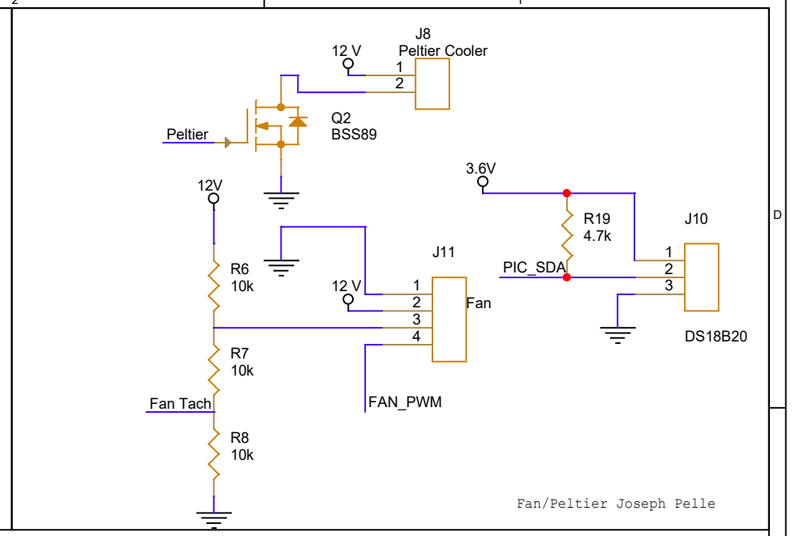

LED Harry Z.

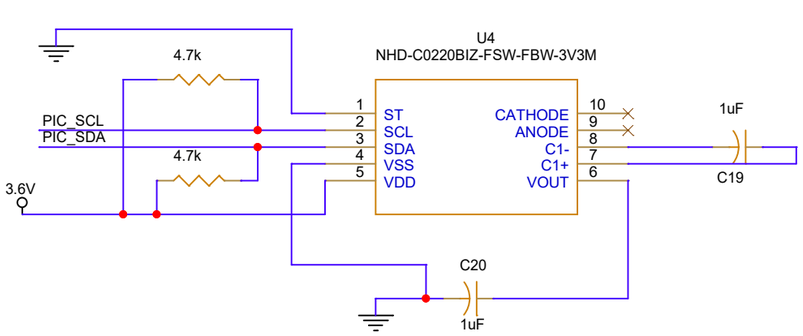

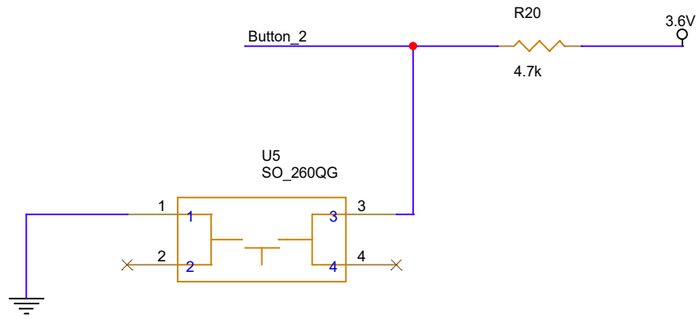

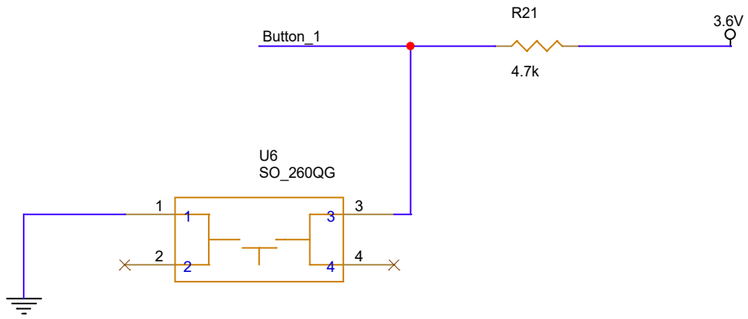

Heating Element Erik A.

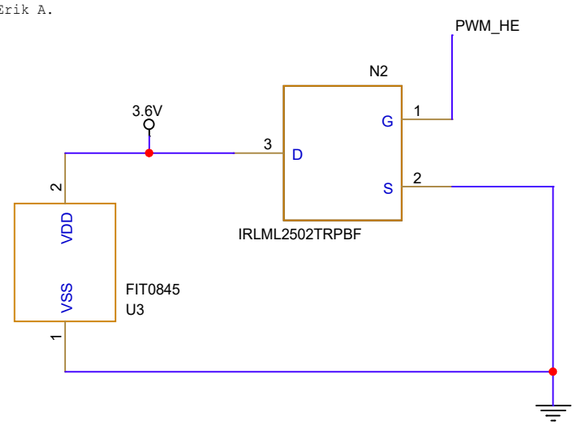

Humidity Sensor Hunter Janisch

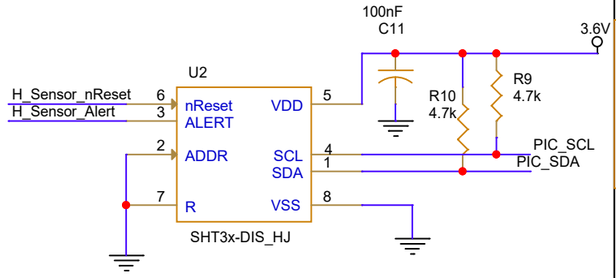

Power Supply Hunter Janisch

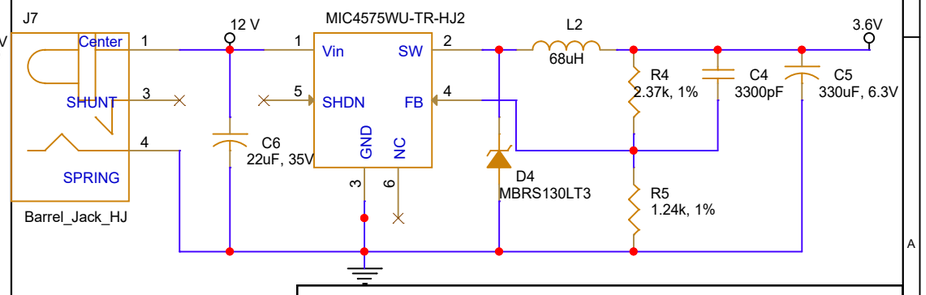

Title	EGR314_Team201_HardwareProposal	
Size B	Document Number 0.1	Rev 0.1
Date: Monday, February 26, 2024	Sheet 1 of 1	