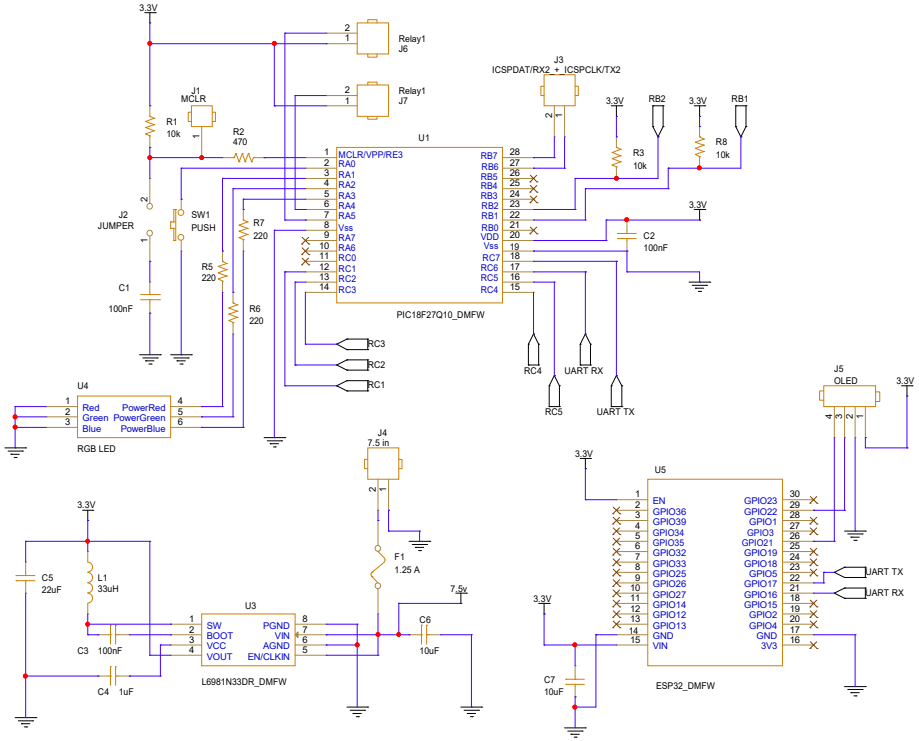

Finnton Wentworth

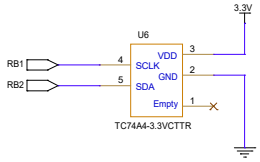

Aiden Lynch - I2C

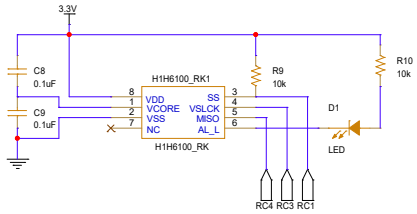

Richard Kovalcik -SPI

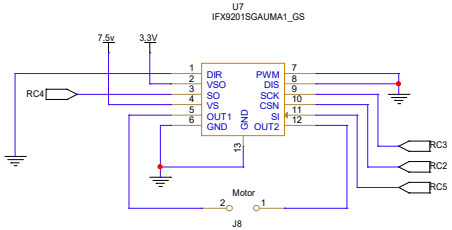

Glen Stevens- SPI

Title	<Title>	
Size C	Document Number <Doc>	Rev <RevCode>
Date: Saturday, February 25, 2023	Sheet 1 of 1	