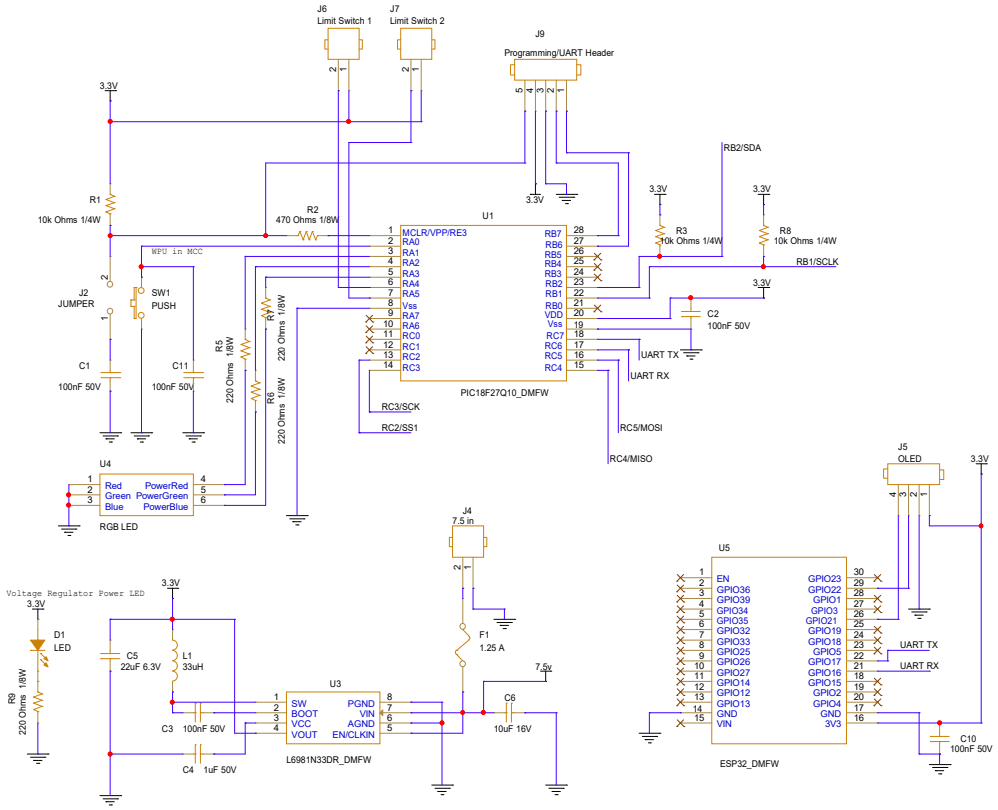

Finnton Wentworth

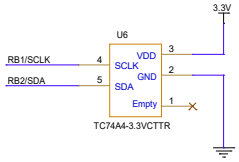

Aiden Lynch - I2C

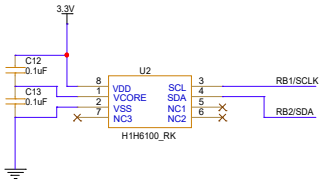

Richard Kovalcik -I2C

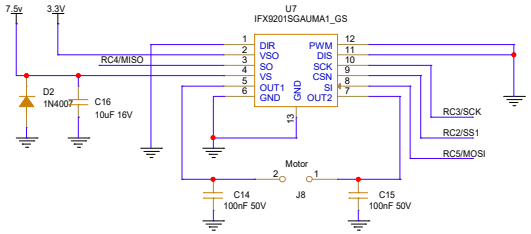

Glen Stevens- SPI

Title	Team 201 PCB V2	
Size C	Document Number 1	Rev 3.0
Date: Wednesday, March 29, 2023	Sheet 1 of 1	