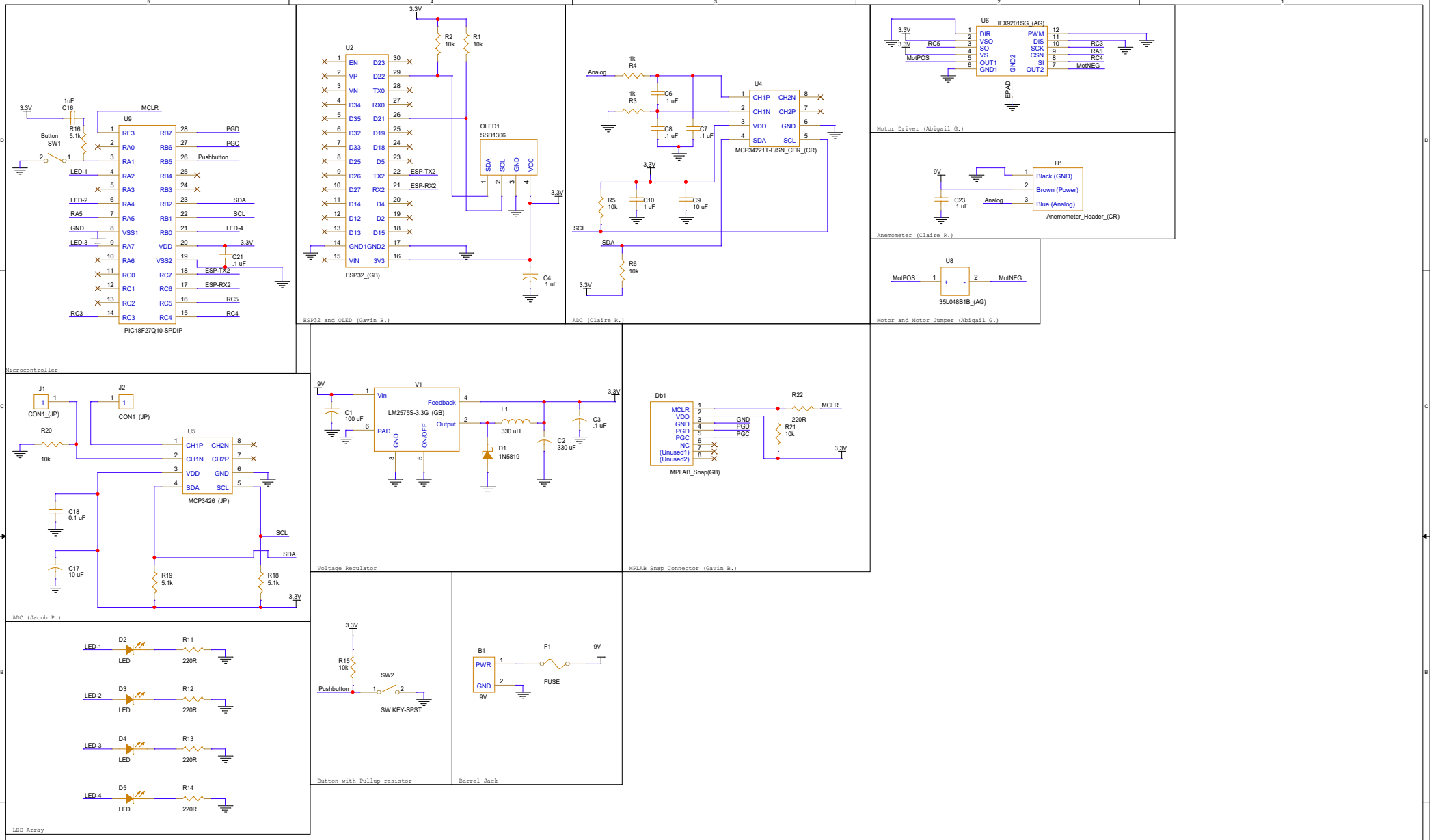

Title	EGR314: Team 206 System Schematic		
Size C	Document Number 1	Team Members Gavin Benvenuto, Claire Rogers, Abigail Gordon, Jacob Pisors	Rev
Date: Wednesday, April 26, 2023		Sheet 1 of 1	