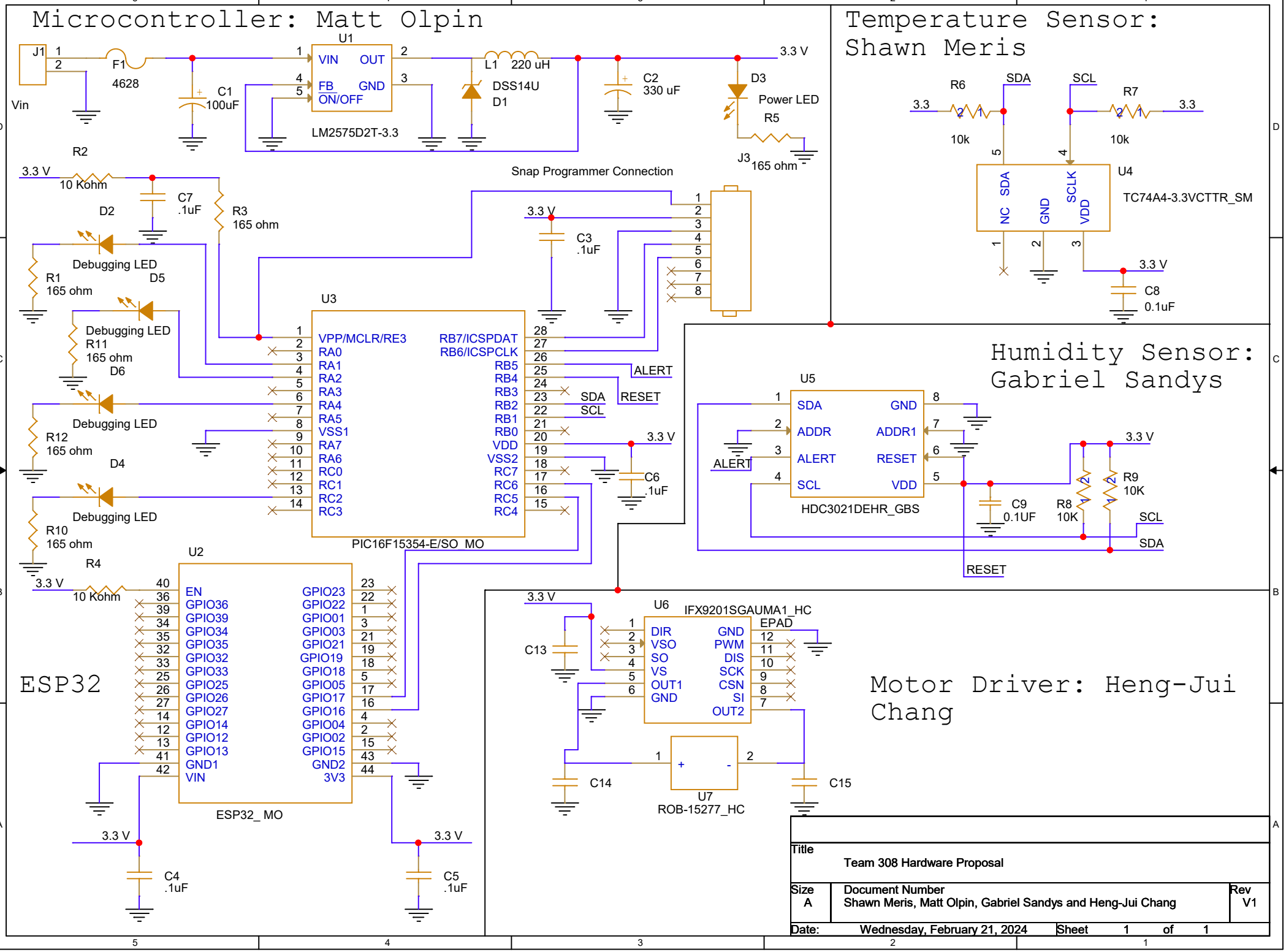
Microcontroller: Matt Olpin
Temperature Sensor: Shawn Meris
Humidity Sensor: Gabriel Sandys
Motor Driver: Heng-Jui Chang
ESP32
J1
Vin
F1
4628
C1
100uF
U1
VIN
OUT
FB
GND
ON/OFF
LM2575D2T-3.3
L1 220 uH
DSS14U
D1
C2
330 uF
3.3 V
D3
Power LED
R5
J3
165 ohm
R2
10 Kohm
C7
.1uF
R3
165 ohm
D2
Debugging LED
R1
165 ohm
D5
Debugging LED
R11
165 ohm
D6
Debugging LED
R12
165 ohm
D4
Debugging LED
R10
165 ohm
R4
10 Kohm
Snap Programmer Connection
C3
.1uF
U3
VPP/MCLR/RE3
RA0
RA1
RA2
RA3
RA4
RA5
VSS1
RA7
RA6
RC0
RC1
RC2
RC3
RB7/ICSPDAT
RB6/ICSPCLK
RB5
RB4
RB3
RB2
RB1
RB0
VDD
VSS2
RC7
RC6
RC5
RC4
ALERT
SDA
RESET
SCL
C6
.1uF
PIC16F15354-E/SO_MO
U2
EN
GPIO36
GPIO39
GPIO34
GPIO35
GPIO32
GPIO33
GPIO25
GPIO26
GPIO27
GPIO14
GPIO12
GPIO13
GND1
VIN
GPIO23
GPIO22
GPIO01
GPIO03
GPIO21
GPIO19
GPIO18
GPIO05
GPIO17
GPIO16
GPIO04
GPIO02
GPIO15
GND2
3V3
ESP32_ MO
C4
.1uF
C5
.1uF
R6
10k
SDA
SCL
R7
10k
U4
NC
SDA
GND
SCLK
VDD
TC74A4-3.3VCTTR_SM
C8
0.1uF
U5
SDA
ADDR
ALERT
SCL
GND
ADDR1
RESET
VDD
HDC3021DEHR_GBS
C9
0.1UF
R8
10K
R9
10K
U6
IFX9201SGAUMA1_HC
EPAD
DIR
VSO
SO
VS
OUT1
GND
PWM
DIS
SCK
CSN
SI
OUT2
C13
C14
C15
U7
ROB-15277_HC
Title
Team 308 Hardware Proposal
Size
A
Document Number
Shawn Meris, Matt Olpin, Gabriel Sandys and Heng-Jui Chang
Rev
V1
Date:
Wednesday, February 21, 2024
Sheet
1
of
1