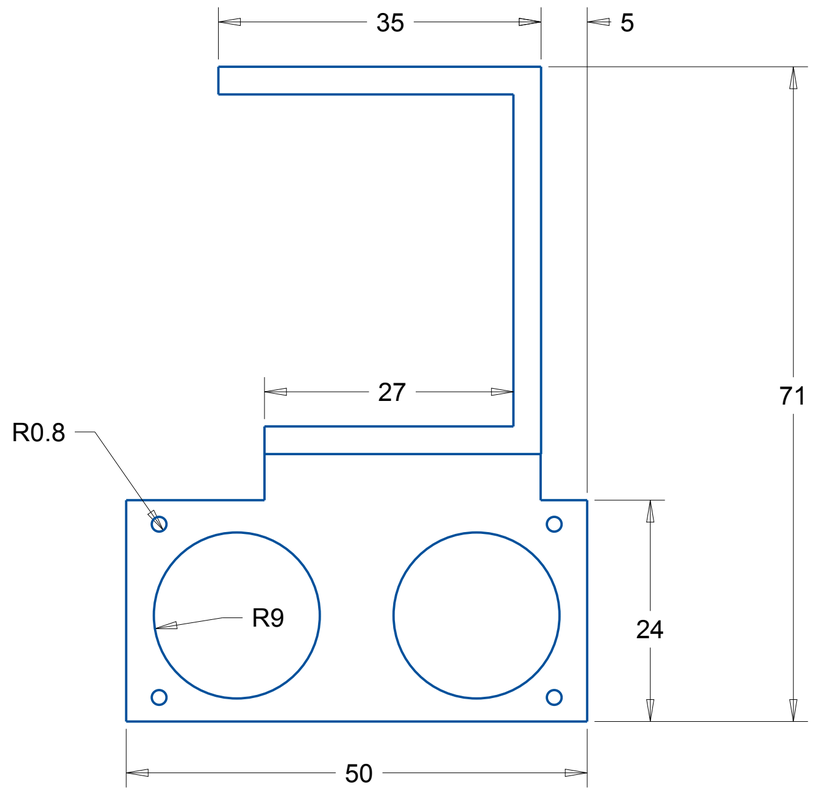
35
5
27
71
R0.8
R9
24
50

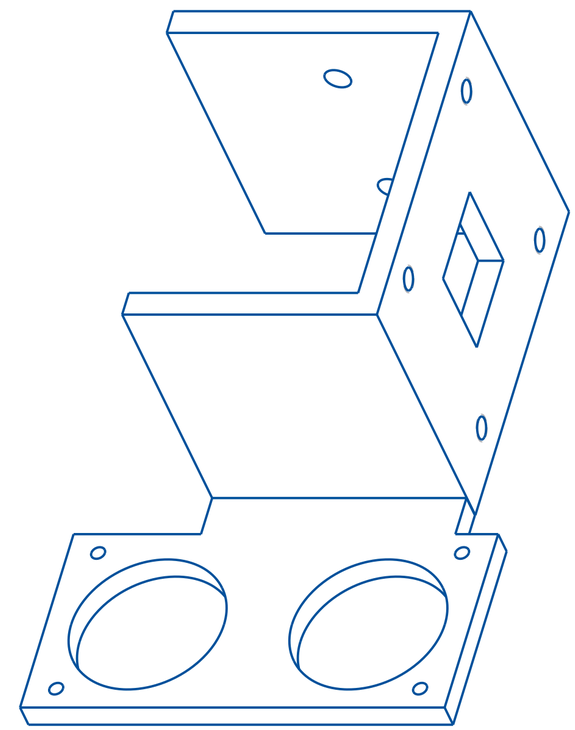

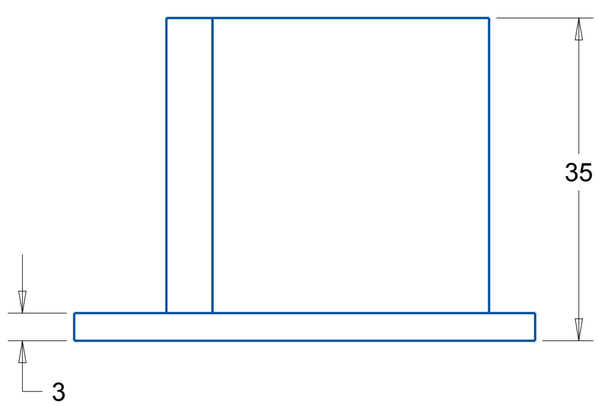
35
3

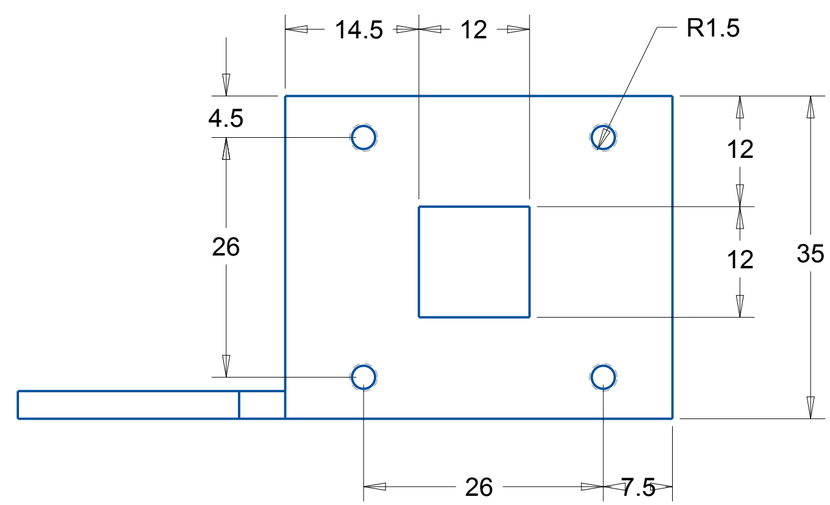
14.5
12
R1.5
4.5
12
26
12
35
26
7.5