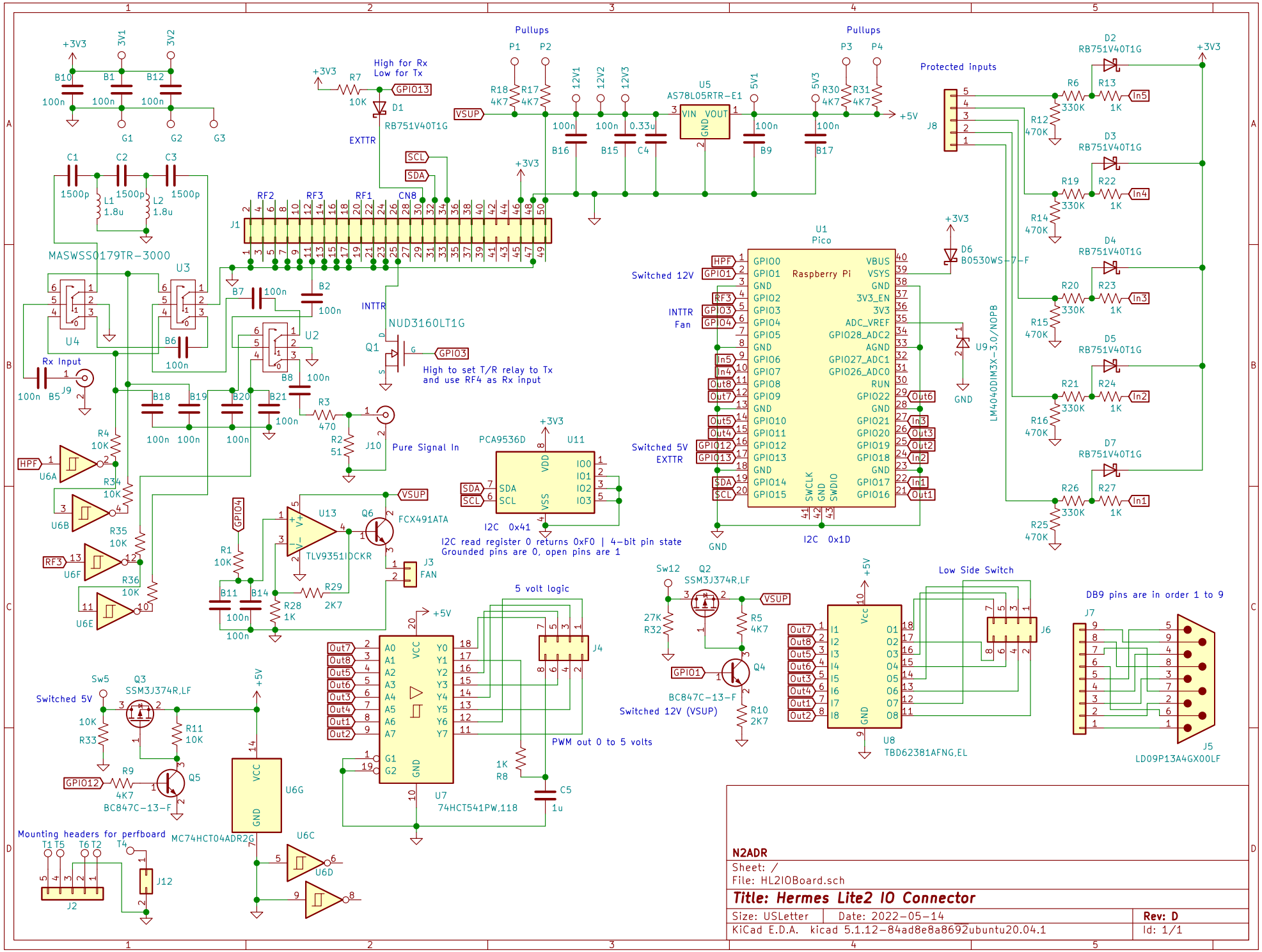
Pullups
Protected inputs
High for Rx
Low for Tx
EXTTR
INTTR
Fan
Switched 12V
Switched 5V
Switched 12V (VSUP)
Rx Input
Pure Signal In
High to set T/R relay to Tx
and use RF4 as Rx input
MASWSS0179TR-3000
NUD3160LT1G
PCA9536D
I2C 0x41
I2C 0x1D
I2C read register 0 returns 0xF0 | 4-bit pin state
Grounded pins are 0, open pins are 1
Raspberry Pi
Pico
AS78L05RTR-E1
RB751V40T1G
B0530WS-7-F
LM4040DIM3X-3.0/NOPB
FCX491ATA
TLV9351IDCKR
SSM3J374R,LF
BC847C-13-F
MC74HCT04ADR2G
5 volt logic
PWM out 0 to 5 volts
74HCT541PW,118
Low Side Switch
TBD62381AFNG,EL
DB9 pins are in order 1 to 9
LD09P13A4GX00LF
Mounting headers for perfboard
N2ADR
Sheet: /
File: HL2IOBoard.sch
Title: Hermes Lite2 IO Connector
Size: USLetter
Date: 2022-05-14
Rev: D
KiCad E.D.A. kicad 5.1.12-84ad8e8a8692ubuntu20.04.1
Id: 1/1