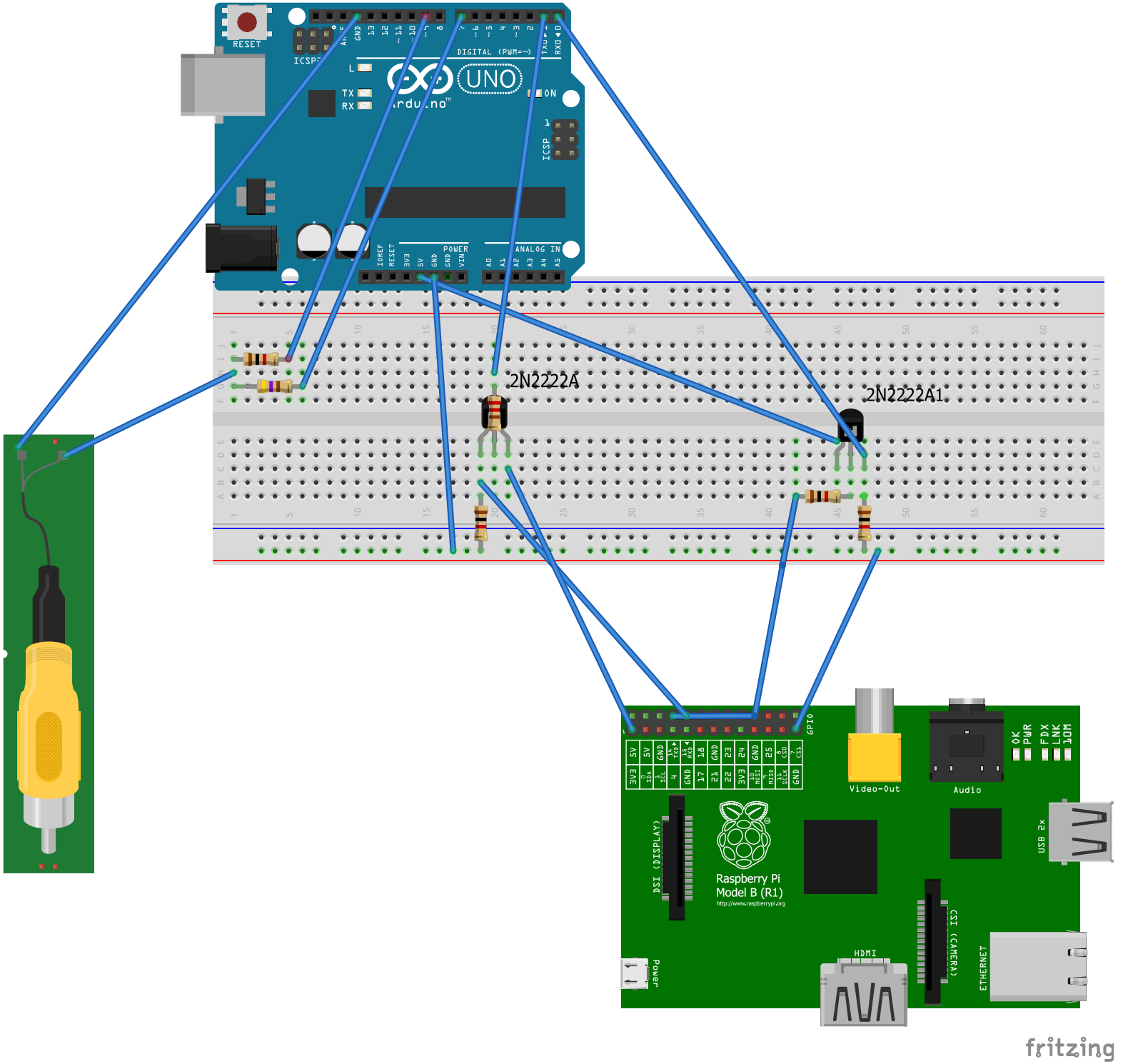
RESET
ICSP
DIGITAL (PWM=~)
UNO
ON
ICSP
POWER
ANALOG IN
2N2222A
2N2222A1
GPIO
Video-Out
Audio
OK
PWR
FDX
LNK
100
DSI (DISPLAY)
Raspberry Pi
Model B (R1)
http://www.raspberrypi.org
USB 2x
CSI (CAMERA)
HDMI
ETHERNET
Power
fritzing