MARMARA UNIVERSITY
FACULTY OF ENGINEERING

3-CYLINDER COMPACT DIESEL ENGINE CYLINDER HEAD DESIGN

Ulaş Cengiz, Hüseyin Kaya, Levent Yörük

GRADUATION PROJECT REPORT

Department of Mechanical Engineering

Supervisor
Prof. Dr. Mehmet Zafer Gül

ISTANBUL, 2025

MARMARA UNIVERSITY
FACULTY OF ENGINEERING

3-Cylinder Compact Diesel Engine Cylinder Head Design

by

Ulaş CENGIZ, Hüseyin KAYA , Levent YORUK

June 23, 2025, Istanbul

SUBMITTED TO THE DEPARTMENT OF MECHANICAL ENGINEERING IN PARTIAL FULFILLMENT OF THE REQUIREMENTS FOR THE DEGREE OFBACHELOR OF SCIENCE AT MARMARA UNIVERSITY

The author(s) hereby grant(s) to Marmara University permission to reproduce and to distribute publicly paper and electronic copies of this document in whole or in part and declare that the prepared document does not in any way include copying of previous work on the subject or the use of ideas, concepts, words, or structures regarding the subject without appropriate acknowledgement of the source material.

Signature of Author(s) .....**Ulaş Cengiz , Hüseyin kaya, Levent Yörük**.....
Department of Mechanical Engineering

Certified by.....**Prof. Dr.Mehmet Zafer Gül**….....

Project Supervisor, Department of Mechanical Engineering

Accepted by.....**Prof.Dr. Bülent EKİCİ**.....

Head of the Department of Mechanical Engineering

ACKNOWLEDGEMENT

First of all, I would like to thank my supervisor Prof. Dr. Mehmet Zafer GUL, for the valuable guidance and advice on preparing this thesis and giving me moral and material support.

June, 2025

Ulaş Cengiz

Hüseyin Kaya

Levent Yörük

TABLE OF CONTENTS

TABLE OF CONTENTS iv

ABSTRACT viii

ABBREVIATIONS ix

TABLE OF FIGURES x

TABLE OF TABLES xv

1. INTRODUCTION 1

1.1. Purpose and Scope of the Project 1

1.2. Motivation for Redesign 1

2. LITERATURE REVIEW 2

2.1. Overview of Internal Combustion Engine Types 2

2.1.1. Stroke-Based classification 2

2.1.2. Classification by Thermodynamic Cycle 3

2.1.3. Fuel Delivery and Ignition Mechanism 4

2.1.4. Alternative Internal Combustion Engine Concepts 6

2.2. Cylinder Head and Valve Train Design Principles 7

2.2.1. Role of the Cylinder Head 7

2.2.2. Valve Train Layouts 8

2.2.3. Valve Train Dynamics and High-Speed Challenges 9

2.2.4. Valve Clearance and Lash Adjustment 10

2.2.5. Material and Manufacturing Considerations 10

2.2.6. Port Design and Flow Optimization 10

2.3. Evolution of Fuel Injection Systems 10

2.3.1. Early Fuel Injection Systems 11

2.3.2. Gasoline Fuel Injection: Port and Throttle-Body Injection 11

2.3.3. Diesel Fuel Injection: Mechanical Systems 12

2.3.4. The Rise of Electronic Fuel Injection (EFI) 13
2.3.5. Common-Rail Direct Injection (CRDI) 13
2.3.6. Gasoline Direct Injection (GDI) and Hybrid Systems 14
2.3.7. Piezoelectric Injector Technology 15
2.4. Turbocharging Technology in Diesel Engines 16
2.4.1. Historical Development and Principles of Operation 16
2.4.2. Benefits of Turbocharging in Diesel Engines 17
2.4.3. Variable Geometry Turbochargers (VGT) 17
2.4.5. Electric-Assisted and Compound Turbocharging 18
2.4.6. Turbocharger Shaft Dynamics and Efficiency 18
2.4.7. Lubrication and Thermal Management 18
2.4.8. Integration with Emissions Control Systems 18
2.5. Importance of Intake and Exhaust Manifold Design 19
2.5.1. Role of the Intake Manifold 19
2.5.2. Role of the Exhaust Manifold 20
2.5.3. Types of Manifold Designs 21
2.5.4. Impact on Turbocharging and Emissions 22
3. REFERENCE ENGINE SELECTION AND EVALUATION: 22
3.1. Antor AD400 22
3.1.1. General Overview of the Antor AD400 22
3.2. Mercedes-Benz OM639 (Smart Brabus 0.8-Liter) 23
3.3. Hyundai 1.1 L D3FA (U-Series) – Reference Engine Overview 26
3.4. Chevy/GM 1.2 L TDI-CR EA189 (VW Polo) 28
3.5. Audi 1.4 TDI EA288 30
4. COMPONENT DESIGN 32
4.1. Cylinder Head Design 32

4.1.1. Introduction and Functional Overview 32
4.1.2. Combustion Chamber Design 32
4.1.3. Valve System Design 33
4.1.4. Port Geometry and Flow Optimization 34
4.1.5. Cooling and Thermal Management 34
4.1.6. Valve Train Mounting and Head Structure 35
4.1.7. Injector Integration and Sealing Surfaces 35
4.1.8. Material Selection and Manufacturing Techniques 36
4.2. Design of Valve Train Mechanism 37
4.2.1. Camshaft Design and Valve Lift Profile 38
4.2.2. Inertial Force and Spring Selection 39
4.2.3. Rocker Arm Design (Exhaust and Intake Side) 39
4.2.4. Inertial Torque on Camshaft 40
4.2.5. Timing Mechanism 40
4.2.6. Manufacturing Processes of Valve Train Components 41
4.3. Design of Intake and Exhaust Manifolds 43
4.3.1. Intake Manifold Overview 43
4.3.2. Exhaust Manifold Overview 44
4.3.3. Design Considerations for Intake and Exhaust Manifolds 44
4.3.4. Manufacturing Methods of Intake and Exhaust Manifolds 45
4.4. Design of Fuel Injection System 54
4.4.1. Main Components of the System 54
4.4.2. Types of Fuel Injection Systems 60
4.5. Design of Turbocharging system 63
4.5.1. Turbocharger Function Overview 64
4.5.2. Turbo Selection Parameters 64

5. LOTUS ENGINE SIMULATON ANALYSIS 66

6. COST ANALYSIS 74

7. CONCLUSION 76

8. FURTHER DESIGN PARTS AND TECHNICAL DRAWINGS 79

8.1. New design parts and technical drawings 101

9. REFERENCES 148

ABSTRACT

This graduation project presents the structural and thermodynamic redesign of a compact three-cylinder turbocharged diesel engine, with a specific focus on the cylinder head, valve train system, intake and exhaust manifolds, turbocharging unit, and common-rail fuel injection system. The goal was to overcome the limitations of previous single-cylinder and early three-cylinder engines in terms of airflow, combustion efficiency, and manufacturability. A DOHC layout with a direct-acting valve mechanism was adopted to improve high-RPM performance, while a re-entrant bowl piston and optimized port geometries supported stratified combustion and enhanced fuel-air mixing. Advanced tools including CAD modeling and Lotus EngineSim software were utilized to simulate the engine's thermodynamic performance under various operating conditions. Performance outputs such as brake power, torque, volumetric efficiency, and fuel consumption were calculated to validate the design. Additionally, material selection and production methods were considered to ensure structural integrity and cost-effectiveness. The final design offers a scalable, emission-compliant, and fuel-efficient engine platform aligned with Euro 6 standards and hybrid integration potential, showcasing the interdisciplinary application of mechanical engineering principles.

ABBREVIATIONS

3D	:Three-Dimensional
AFR	:Air-Fuel Ratio
BDC	:Bottom Dead Center
BSFC	:Brake Specific Fuel Consumption
CAD	:Computer-Aided Design
CAE	:Computer-Aided Engineering
CFD	:Computational Fluid Dynamics
CNC	:Computer Numerical Control
CR	:Compression Ratio
DOHC	:Double Overhead Camshaft
ECU	:Engine Control Unit
EGR	:Exhaust Gas Recirculation
EVC	:Exhaust Valve Closing
EVO	:Exhaust Valve Opening
FEA	:Finite Element Analysis
HP	:Horsepower
ICE	:Internal Combustion Engine
IMEP	:Indicated Mean Effective Pressure
IVC	:Intake Valve Closing
IVO	:Intake Valve Opening
LHV	:Lower Heating Value
NOx	:Nitrogen Oxides
PM	:Particulate Matter
RPM	:Revolutions Per Minute
SAE	:Society of Automotive Engineers
SOHC	:Single Overhead Camshaft
TDC	:Top Dead Center

TABLE OF FIGURES

Figure 1:Two stroke and four stroke engine comparison 3

Figure 2:Comparison of SI (Spark Ignition) and CI (Compression Ignition) Engines 5

Figure 3:Comparison of Direct and Indirect Fuel Injection Systems in Diesel Engines 5

Figure 4:Rotary engine (Wankel type) 6

Figure 5:Turbine engine 6

Figure 6:Free-piston engine 7

Figure 7:Basic Structure of the Cylinder Head 8

Figure 8:Different types of valve mechanisms..... 9

Figure 9:Comparison of Multi-Port Injection and Throttle Body Injection Systems..... 12

Figure 10:Diesel Fuel Injection System 13

Figure 11:Common-Rail system..... 14

Figure 12:Gasoline Direct Injection System 15

Figure 13:Turbocharging system..... 16

Figure 14:Manifold system 19

Figure 15:Ford Eco-Boost 1.0L intake manifold 20

Figure 16:Ford Eco-Boost 1.0L exhaust manifold 21

Figure 17:Antor 6LD 400 engine 23

Figure 18:Mercedes-Benz OM639 (Smart Brabus 0.8 Liter) 24

Figure 19:Hyundai 1.1 L D3FA (U-Series) 26

Figure 20:Chevy/GM 1.2 L TDI-CR EA189 (VW Polo) 28

Figure 21:Audi 1.4 TDI EA288 30

Figure 22:İntake manifold 43

Figure 23:Exhaust manifold 44

Figure 24:Intake manifold produced by die casting 46

Figure 25:Die casting process 46

Figure 26:Injection molding process 46
Figure 27:Intake manifold produced by injection molding 46
Figure 28:3D printing for prototype 47
Figure 29:Exhaust manifold produced by sand casting 48
Figure 30:Sand casting process 48
Figure 31:Intake manifold produced by welding 48
Figure 32:Welding process 48
Figure 33:Intake manifold produced by investment casting 49
Figure 34:Investment casting process 49
Figure 35:Different fuel pumps 55
Figure 36:Fuel Filter 56
Figure 37: Fuel injector 57
Figure 38: Electronic control unit(ECU) 58
Figure 39: Pressure Regulator 59
Figure 40: Port fuel injection(PFI) 60
Figure 41: Direct injection(DI/GDI) 61
Figure 42: Common rail injection(CRDI) 62
Figure 43:Turbocharging system 64
Figure 44:Turbocharger flow 65
Figure 45:Schematic of the engine in Lotus Engineering 67
Figure 46:Specifications of the cylinder,exhaust and intake port 67
Figure 47:For Cylinder-1 at 4000 rpm results 68
Figure 48:For Cylinder-1 at 6000 rpm results 68
Figure 49:Performance Curve 69
Figure 50:Airflow (Inlet) Curve 69
Figure 51:Airflow (Exhaust) Curve 70

Figure 52:Combustion Curve (1) 70

Figure 53:Combustion Curve (2) 71

Figure 54:Work Curve 71

Figure 55:Convergence Curve 72

Figure 56:Temperature and pressure graph for first piston. 72

Figure 57:Temperature and pressure graph for second piston. 73

Figure 58:Temperature and pressure graph for third piston. 73

Figure 59: Technical drawing of piston 79

Figure 60: Technical drawing of engine block 80

Figure 61: Technical drawing of cranckshaft 81

Figure 62: Technical drawing of Exhaust valves camshaft 82

Figure 63: Technical drawing of intake valves camshaft 83

Figure 64: Technical drawing of exhaust valve 84

Figure 65: Technical drawing of intake valve 84

Figure 66: Technical drawing of bearing seat 85

Figure 67: Technical drawing of ball bearing 85

Figure 68: Technical drawing of cranckcase 86

Figure 69: Technical drawing of gearbox 87

Figure 70: Technical drawing of gearbox cap 88

Figure 71: Technical drawing of rocker, camshafts and valves cap 89

Figure 72: Technical drawing of intake valve spring 90

Figure 73: Technical drawing of exhaust valve spring 90

Figure 74: Technical drawing of injection 91

Figure 75: Technical drawing of engine up block 92

Figure 76: Technical drawing of piston rod body 93

Figure 77: Technical drawing of piston rod down 94

Figure 78: Technical drawing of alternator connect 94
Figure 79: Technical drawing of cylinder liner 95
Figure 80: Technical drawing of piston pin 95
Figure 81: Technical drawing of pulley bracket 96
Figure 82: Technical drawing of docker screw 96
Figure 83:Technical drawing of tensioner base 97
Figure 84: Technical drawing of tensioner slider 97
Figure 85: Technical drawing of unit pump system (Ups) 98
Figure 86: Technical drawing of UPS roller 98
Figure 87: Technical drawing of UPS roller pin 99
Figure 88: Technical drawing of UPS rocker pin 99
Figure 89: Technical drawing of UPS spring 100
Figure 90: Technical drawing of injector 101
Figure 91: Technical drawing of injector-rail connection 1 102
Figure 92: Technical drawing of injector-rail connection 2 103
Figure 93: Technical drawing of fuel filter pipe 1 104
Figure 94: Technical drawing of common rail piece 105
Figure 95: Technical drawing of piece pipe 106
Figure 96: Technical drawing of fuel filter 107
Figure 97: Technical drawing of fuel filter pipe 2 108
Figure 98: Technical drawing of fuel filter-pump pipe 109
Figure 99: Technical drawing of rail 110
Figure 100: Technical drawing of rail pipe 1 111
Figure 101: Technical drawing of rail plug 112
Figure 102: Technical drawing of rail pipe 2 113
Figure 103: Technical drawing of air filter 114

Figure 104: Technical drawing of camshaft bearing 115
Figure 105: Technical drawing of camshaft 116
Figure 106: Technical drawing of camshaft pulley 117
Figure 107: Technical drawing of cylinder head 118
Figure 108: Technical drawing of exhaust manifold 119
Figure 109: Technical drawing of headcover 120
Figure 110: Technical drawing of pipe 1 121
Figure 111: Technical drawing of pipe 2 122
Figure 112: Technical drawing of intercooler 123
Figure 113: Technical drawing of intake valve 124
Figure 114: Technical drawing of intake manifold 125
Figure 115: Technical drawing of intake to interpipe 126
Figure 116: Technical drawing of intake valve seat 127
Figure 117: Technical drawing of intercooler center 128
Figure 118: Technical drawing of inter to turbo pipe 129
Figure 119: Technical drawing of belt 1 130
Figure 120: Technical drawing of belt 2 131
Figure 121: Technical drawing of radial ball bearing 132
Figure 122: Technical drawing of spring 133
Figure 123: Technical drawing of tappet 134
Figure 124: Technical drawing of valve lock 135
Figure 125: Technical drawing of valve retainer 136
Figure 126:Cylinder head bottom side geometry 137
Figure 127:Cylinder head top side geometry 137
Figure 128: Engine assembly left-front side 138
Figure 129: Engine assembly from front side 139

Figure 130: Engine assembly from right side 140

Figure 131: Engine assembly from back side 141

Figure 132:Belt Mechanism 142

Figure 133: Cylinder head design 143

Figure 134: Section view of the combustion chamber 144

Figure 135:Exploded view 1 145

Figure 136:Exploded view 2 146

Figure 137:Engine assembly view 147

TABLE OF TABLES

Table 1:Specifications of Mercedes-Benz OM639 25

Table 2:Specifications of Hyundai 1.1 L D3FA 27

Table 3:Specifications of Chevy/GM 1.2 L TDI-CR EA189 29

Table 4:Specifications of Audi 1.4 TDI EA288 31

Table 5:Summary of design impact 53

Table 6:Pressure range of injection 54

Table 7: Comparsion of injection systems 63

Table 8:3-Cylinder Diesel Engine Cost Analysis 74

1. INTRODUCTION

1.1. Purpose and Scope of the Project

This project aims to design a modern three-cylinder diesel engine by revising and optimizing critical subsystems such as the cylinder head, valve train mechanism, fuel injection system, intake and exhaust manifolds, and turbocharging unit. The study specifically addresses limitations observed in earlier engine architectures by introducing updated geometries, enhanced airflow characteristics, and improved combustion strategies. In contrast to conventional single-cylinder configurations, the newly developed engine incorporates a multi-cylinder layout intended to achieve higher volumetric efficiency and improved thermal behavior. The scope of the project encompasses 3D computer-aided design (CAD) modeling of all major components, structural integration of subsystems, simulation-based performance evaluation, and a basic manufacturability and cost assessment. The ultimate goal is to establish a compact, efficient, and scalable power unit suitable for light-duty diesel applications while adhering to contemporary engineering standards.

1.2. Motivation for Redesign

The motivation behind the redesign of the engine lies in the need to overcome the structural, thermal, and performance limitations typically encountered in legacy single-cylinder and early three-cylinder diesel engines. Previous designs often suffered from inefficient combustion chamber geometries, suboptimal valve configurations, inadequate thermal management, and outdated fuel delivery strategies. These shortcomings directly impacted the engine’s power density, fuel economy, and emission behavior.

In this context, the redesign aims to introduce a more efficient cylinder head architecture with an optimized valve arrangement, support higher injection pressures through updated fuel system integration, and enhance air handling via reengineered intake and exhaust manifolds. Additionally, the implementation of a turbocharging mechanism is intended to increase the engine's specific output without compromising fuel efficiency. This systematic redesign is driven by the objective of achieving better mechanical balance, reduced specific fuel consumption, improved manufacturability, and compliance with modern performance and emission criteria.

2. LITERATURE REVIEW

2.1. Overview of Internal Combustion Engine Types

Internal combustion engines (ICEs) are thermal machines that convert the chemical energy stored in fuel into mechanical energy through a controlled combustion process occurring inside a confined chamber. These engines are widely used in land vehicles, maritime applications, power generation units, and agricultural machinery due to their high energy density and operational flexibility (Britannica, 2024).

2.1.1. Stroke-Based classification

The most basic and historical classification of internal combustion engines is based on the number of piston strokes required to complete one power cycle. The two most prevalent types are two-stroke and four-stroke engines.

In a **two-stroke** engine, the entire cycle—intake, compression, power, and exhaust—is completed in just two piston movements (one revolution of the crankshaft). This makes two-stroke engines compact, mechanically simpler, and capable of higher power-to-weight ratios. However, due to poor scavenging efficiency and significant unburnt fuel loss, they exhibit higher emissions and lower thermal efficiency compared to their four-stroke counterparts. As a result, their usage has become more limited to applications like motorcycles, chainsaws, and outboard engines (OMÜ, 2021).

Four-stroke engines, in contrast, complete one power cycle in four piston movements (two crankshaft revolutions): intake, compression, combustion (power), and exhaust. This design results in more efficient combustion, cleaner exhaust, and better fuel economy. It is the dominant engine architecture in automobiles and heavy machinery. The **six-stroke** engine, a more recent experimental development, adds two additional strokes (typically air or steam expansion strokes) to recover waste heat and further increase thermal efficiency. Research indicates that six-stroke engines may reduce NO_x and unburned hydrocarbons significantly while improving specific fuel consumption (Çelik et al., 2022).

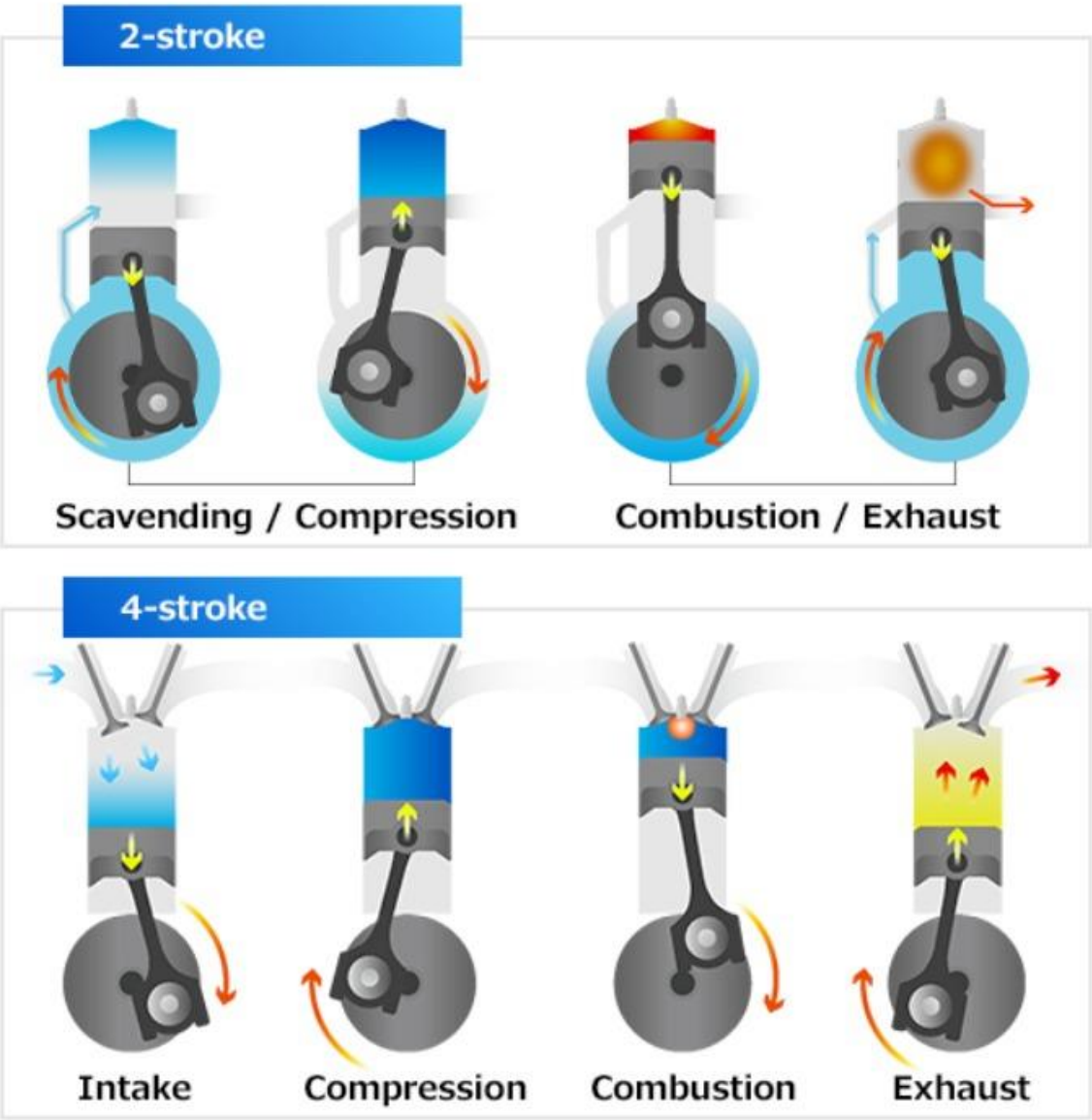

Figure 1:Two stroke and four stroke engine comparison

2.1.2. Classification by Thermodynamic Cycle

Another important way to classify ICEs is based on their **thermodynamic operating cycles**, which dictate how heat energy is added and converted into work.

- The Otto cycle, named after Nikolaus Otto, is the basis for most spark-ignition (SI) gasoline engines. It involves heat addition at constant volume and operates with relatively lower compression ratios (8:1 to 12:1), relying on a spark plug to ignite the pre-mixed fuel-air charge.

- The Diesel cycle, invented by Rudolf Diesel, operates on compression ignition (CI). Air is compressed to high pressure and temperature, and fuel is injected directly into the combustion chamber, where it self-ignites. Diesel engines typically exhibit higher thermal efficiency due to their higher compression ratios (14:1–22:1) and lack of throttling losses (Purdue University, 2023).
- The **Dual cycle**, also known as the limited pressure cycle, combines features of both Otto and Diesel cycles—part of the combustion occurs at constant volume, and the remainder at constant pressure. It offers a compromise between power and efficiency.
- The **Atkinson and Miller cycles** are modified versions of the Otto cycle. By extending the expansion stroke relative to the compression stroke, these engines extract more work from combustion gases, increasing efficiency. They are often found in hybrid vehicles due to their synergy with electric assist systems (Elektrikport, 2023).

Each of these cycles offers unique advantages depending on the engine's intended application—Otto for high-speed responsiveness, Diesel for heavy-load fuel efficiency, and Atkinson/Miller for hybrid optimization.

2.1.3. Fuel Delivery and Ignition Mechanism

ICEs can also be categorized based on how fuel is delivered and ignited within the combustion chamber:

- In **spark-ignition (SI)** engines, typically fueled by gasoline or natural gas, a spark plug is used to initiate combustion after the air-fuel mixture is compressed.
- In **compression-ignition (CI)** engines, mainly diesel-fueled, fuel is injected at high pressure into compressed hot air, leading to spontaneous ignition. Modern diesel engines utilize **common rail** or **unit pump injection systems** to optimize fuel atomization and injection timing (ScienceDirect, 2023).
- **Direct injection** (DI) systems—common in both gasoline and diesel engines—deliver fuel directly into the combustion chamber, leading to more precise control over the combustion process. In contrast, older **indirect injection** systems involve a pre-chamber, resulting in smoother operation but reduced efficiency.

Advancements such as **piezoelectric injectors**, **variable valve timing**, and **exhaust gas recirculation (EGR)** have significantly improved emissions and efficiency in recent decades.

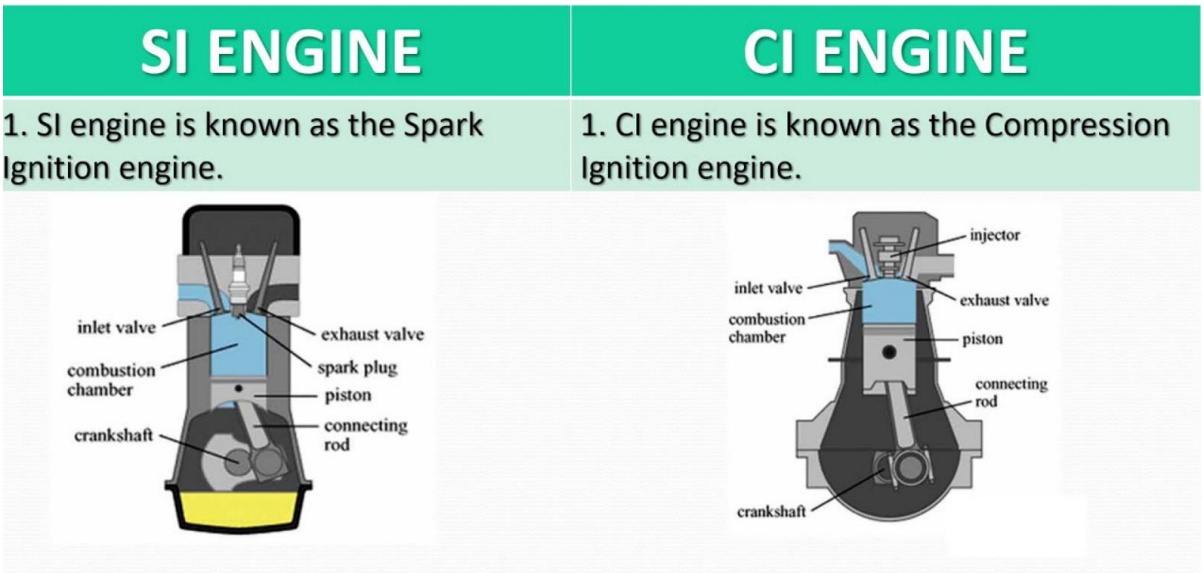

Figure 2:Comparison of SI (Spark Ignition) and CI (Compression Ignition) Engines

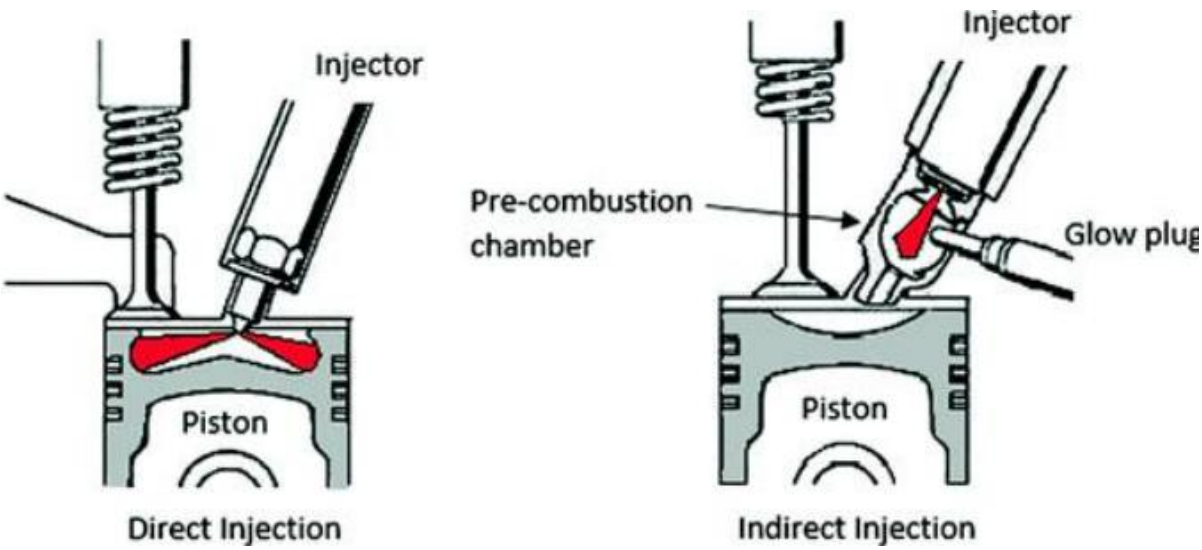

Figure 3:Comparison of Direct and Indirect Fuel Injection Systems in Diesel Engines

2.1.4. Alternative Internal Combustion Engine Concepts

Beyond piston-based reciprocating engines, several alternative ICE concepts have been developed:

- **Rotary engines (Wankel type)** eliminate pistons in favor of a triangular rotor moving within an epitrochoidal chamber. These engines are compact and capable of high RPM, but suffer from high emissions and oil consumption due to sealing issues.

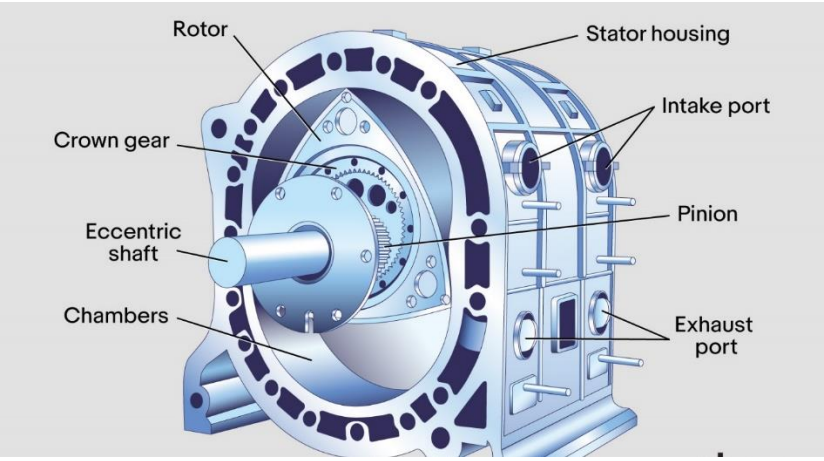

Figure 4:Rotary engine (Wankel type)

- **Turbine engines**, often associated with aircraft, use continuous combustion and rotating blades to extract work. Though not common in cars, they are relevant in power generation and aviation.

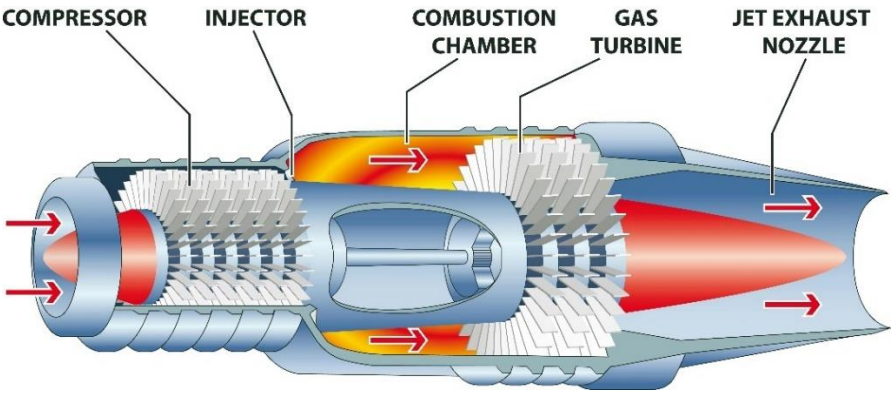

Figure 5:Turbine engine

- **Free-piston engines**, which generate linear motion without a crankshaft, are being researched for use in linear generators and hybrid systems. Their high efficiency and minimal moving parts offer promise, but commercial viability remains limited.

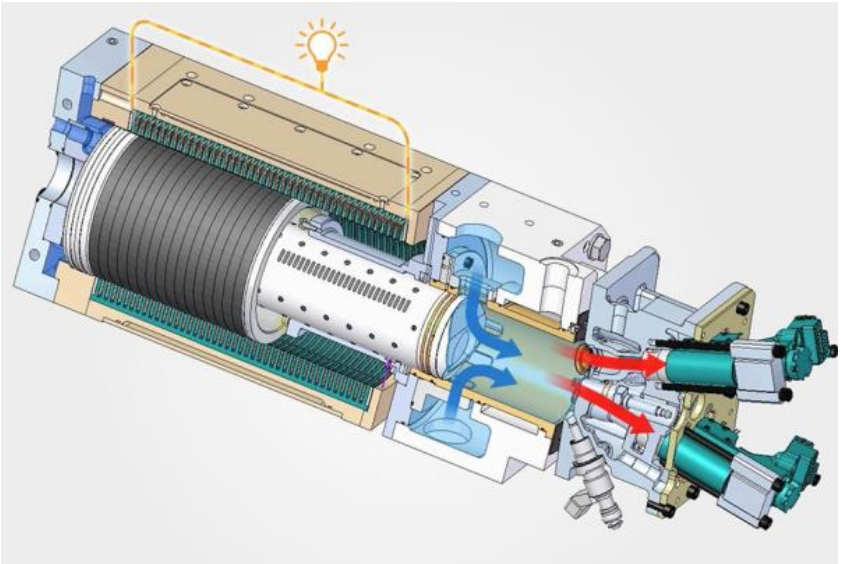

Figure 6:Free-piston engine

2.2. Cylinder Head and Valve Train Design Principles

2.2.1. Role of the Cylinder Head

The cylinder head plays a critical role in forming the top seal of the combustion chamber and must withstand high thermal and mechanical loads. One of its primary tasks is to ensure reliable sealing between the piston and the head during combustion, resisting peak pressures exceeding 150 bar in modern diesel engines (ScienceDirect, 2023).

Valve seats and guides are integral to this sealing. Valve seats provide a surface for the valves to close against, ensuring gas-tight sealing, while valve guides maintain proper valve alignment and allow controlled heat transfer from the valve to the head (Techtips INA, 2015). These components must be manufactured with precise tolerances and materials such as alloy steel or bronze-based inserts to handle both friction and thermal cycling.

Port direction, diameter, and angle are equally critical. Properly designed intake and exhaust ports reduce flow resistance and improve volumetric efficiency. Oblique port angles promote swirl or tumble motion, depending on engine design, enhancing air-fuel mixing and combustion (Wikipedia, "Cylinder Head Porting").

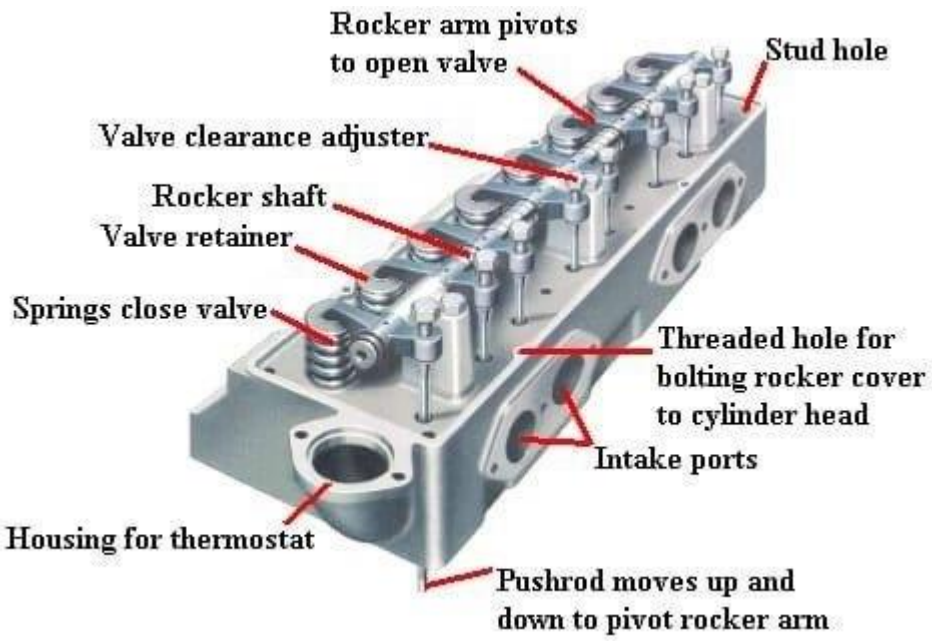

Figure 7:Basic Structure of the Cylinder Head

2.2.2. Valve Train Layouts

The valve train mechanism determines how valves are actuated and significantly affects engine performance and speed capability.

In **Overhead Valve (OHV)** systems, the camshaft is located in the engine block, and valve motion is transmitted via pushrods and rocker arms. This system is mechanically robust and compact but introduces higher inertia due to additional components, limiting high-speed performance (Techtips INA, 2015).

Single Overhead Camshaft (SOHC) designs place the camshaft directly above the valves, typically using rocker arms for actuation. This layout reduces component count and inertial mass compared to OHV, enabling improved efficiency and valve control at moderate speeds (Kozirakis & Henein, 2016).

Double Overhead Camshaft (DOHC) configurations use separate camshafts for intake and exhaust valves, allowing independent control and easier integration of multi-valve systems.

DOHC designs are often paired with crossflow cylinder heads to further improve breathing efficiency (Wikipedia, "Crossflow Cylinder Head").

The **direct-acting valve mechanism**, a subtype of DOHC, enables the cam lobe to press directly on the valve lifter, eliminating intermediate components. This setup offers minimal friction losses and excellent high-RPM capability. According to Roodink (2016), direct-acting layouts exhibit superior valve control and dynamic stability compared to rocker-based systems.

Rotary valve systems represent an unconventional approach where a rotating component replaces poppet valves. Though they offer reduced reciprocating mass and potential flow improvements, they suffer from sealing and lubrication challenges, limiting their practicality (Wiley, 2021).

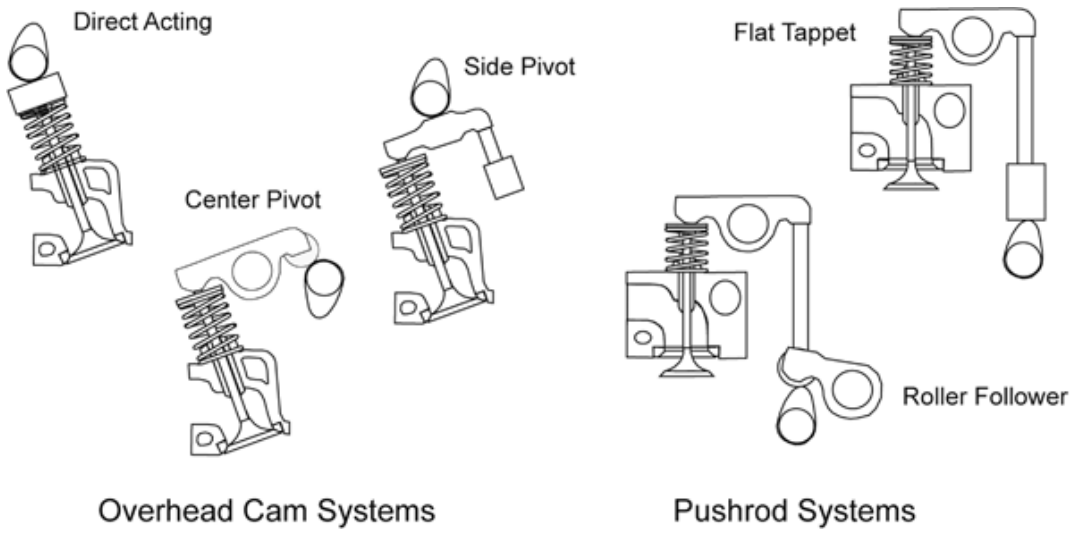

Figure 8:Different types of valve mechanisms

2.2.3. Valve Train Dynamics and High-Speed Challenges

At elevated engine speeds, valve train components are subject to inertial forces, causing valve float, lash instability, and material deformation. The choice of valve springs becomes critical; stiffer springs prevent float but increase friction and wear.

Use of **roller followers** and **low-mass materials** (e.g., titanium valves) can mitigate these issues. Roodink (2016) noted that dynamic instability was significantly reduced in direct-acting systems compared to center-pivot rocker arms at equivalent RPM ranges.

2.2.4. Valve Clearance and Lash Adjustment

Valve lash is the clearance between the valve tip and the cam/follower mechanism. This gap is required to accommodate thermal expansion. Improper lash can lead to valve damage or loss of sealing. Manual adjustment systems use shims or threaded tappets, while hydraulic lash adjusters automatically compensate for temperature-induced dimensional changes, improving durability and reducing maintenance (Techtips INA, 2015).

2.2.5. Material and Manufacturing Considerations

Cylinder heads are primarily manufactured from aluminum alloys due to their favorable strength-to-weight ratio and thermal conductivity. However, cast iron remains in use for heavy-duty engines requiring enhanced structural strength (ScienceDirect, 2023). Valve guides are typically made from bronze or sintered powder metal, providing good wear resistance and heat dissipation. The valve seat inserts often utilize stellite or hardened alloy steels for durability.

2.2.6. Port Design and Flow Optimization

Port geometry significantly impacts engine breathing. **Porting**—the process of smoothing and reshaping intake/exhaust ports—improves airflow, reduces turbulence, and enhances power output. Parameters such as surface roughness and port taper angle must be carefully tuned (Wikipedia, "Cylinder Head Porting").

Wave tuning, which involves optimizing intake runner length to exploit pressure wave reflections, is often used to enhance volumetric efficiency in naturally aspirated engines.

The crossflow design, where intake and exhaust ports are on opposite sides of the head, provides better airflow and thermal separation, increasing volumetric efficiency and reducing knock tendency (Wikipedia, "Crossflow Cylinder Head").

2.3. Evolution of Fuel Injection Systems

Fuel injection systems are essential components in internal combustion engines, responsible for delivering fuel to the combustion chamber in the appropriate amount, timing, and atomization quality. Over the last century, fuel injection technology has undergone significant evolution, moving from mechanical systems to highly precise, electronically controlled units capable of ultra-high-pressure operation.

This section outlines the historical development of fuel injection systems, including all major types, with a particular emphasis on the evolution and significance of common-rail direct injection (CRDI) systems.

2.3.1. Early Fuel Injection Systems

The earliest fuel delivery methods used carburetors, which relied on air flow to draw fuel into the intake air stream. These systems lacked precision and struggled with efficiency and emissions. The first major shift came with **mechanical fuel injection systems**, introduced in the early 20th century.

Air-blast injection, one of the earliest forms, utilized compressed air to atomize and inject fuel into the combustion chamber. Though effective at the time, it was bulky and inefficient, limiting its widespread use. This was followed by **mechanical direct injection**, where a camshaft-driven pump injected fuel directly into the combustion chamber at relatively low pressures. These systems offered better control than carburetors but still lacked the responsiveness needed for modern engines (Heywood, 1988).

2.3.2. Gasoline Fuel Injection: Port and Throttle-Body Injection

In gasoline engines, fuel injection gained popularity in the 1960s and 70s, especially with the development of electronic control units (ECUs). Two key types emerged:

- **Throttle Body Injection (TBI)**: Also known as single-point injection, TBI systems used one or two injectors located at the throttle body, replacing the carburetor. While simpler and more reliable, fuel distribution remained uneven.
- **Port Fuel Injection (PFI)**: Introduced in the 1980s, PFI systems placed an injector at each intake port, greatly improving air-fuel mixing and distribution across cylinders. This became the standard in most naturally aspirated gasoline engines until the 2000s.

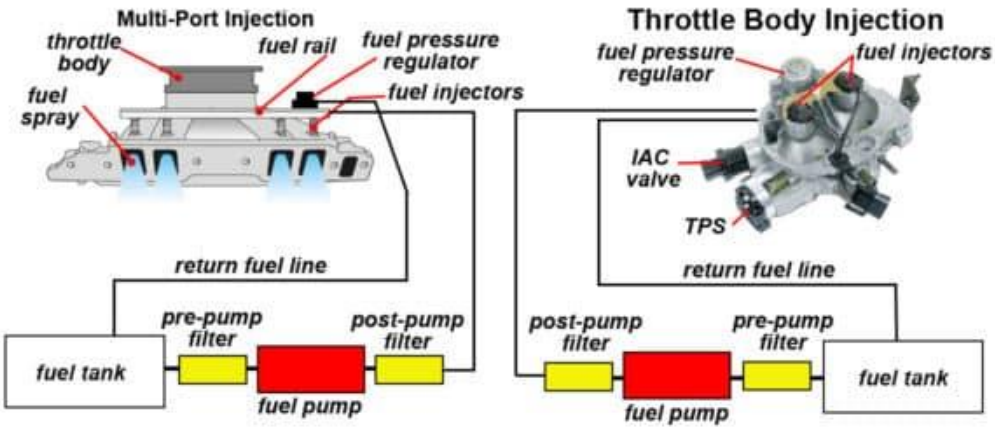

Figure 9:Comparison of Multi-Port Injection and Throttle Body Injection Systems

2.3.3. Diesel Fuel Injection: Mechanical Systems

In diesel engines, fuel must be injected directly into high-pressure combustion chambers, requiring robust delivery mechanisms. The major mechanical systems include:

- **In-line Injection Pumps**: These feature multiple plunger-type pumps arranged in a line, each connected to one injector. They allow high fuel pressure and timing control via cam profiles.
- **Distributor (Rotary) Pumps**: These pumps use a single high-pressure plunger and a rotating distributor to send fuel sequentially to each cylinder. They are lighter and more compact than in-line pumps, though typically limited in pressure.
- **Unit Injector Systems (UI)**: Each cylinder has an integrated pump and injector, driven by the engine's camshaft. This eliminates external high-pressure lines and enables high injection pressures with relatively simple controls.
- **Pumpe-Düse (PD)**: A variation of unit injectors, this system was famously used in Volkswagen TDI engines. It combined very high injection pressure with a compact layout but lacked flexibility in multi-injection strategies.

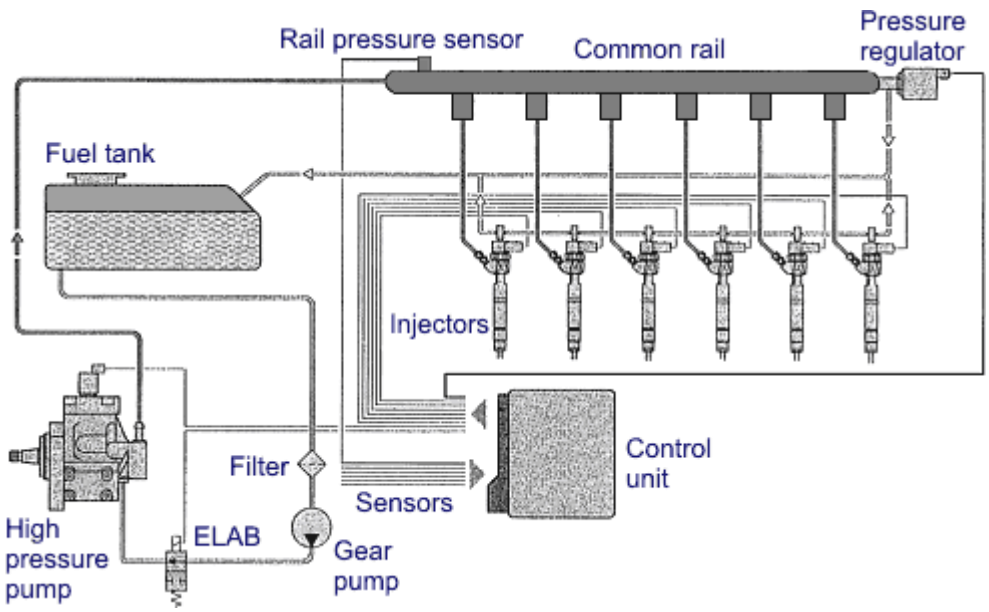

Figure 10:Diesel Fuel Injection System

2.3.4. The Rise of Electronic Fuel Injection (EFI)

Electronic control of fuel injection became widespread in the 1980s and 1990s, enabling real-time adjustment of injection timing, pressure, and duration. This improvement, combined with sensor feedback (such as MAP, MAF, and O2 sensors), allowed engines to meet increasingly strict emissions standards.

Electronic systems enhanced both gasoline (e.g., EFI, GDI) and diesel (e.g., EUI, EUP) injection strategies. This stage was a precursor to the widespread adoption of common-rail technology.

2.3.5. Common-Rail Direct Injection (CRDI)

Common-rail systems represent a major breakthrough in diesel injection technology. In CRDI systems, a high-pressure fuel pump feeds a shared rail (reservoir) that maintains constant pressure for all injectors. Each injector is electronically actuated, independent of engine speed or camshaft timing.

Key features include:

- **High injection pressures**: Modern systems reach up to 2,500–3,000 bar.
- **Multiple injection events**: Pilot, main, and post injections improve combustion smoothness, reduce NOx and particulates.
- **Flexible injection timing and duration**: Enhanced control allows better adaptation to

load, speed, and emissions requirements.

Originally developed for marine and locomotive engines (e.g., Vickers, Doxford), the first automotive application came from Fiat (1997) and was quickly adopted by Bosch, Mercedes-Benz, and others. Today, CRDI is the standard in diesel passenger and commercial vehicles.

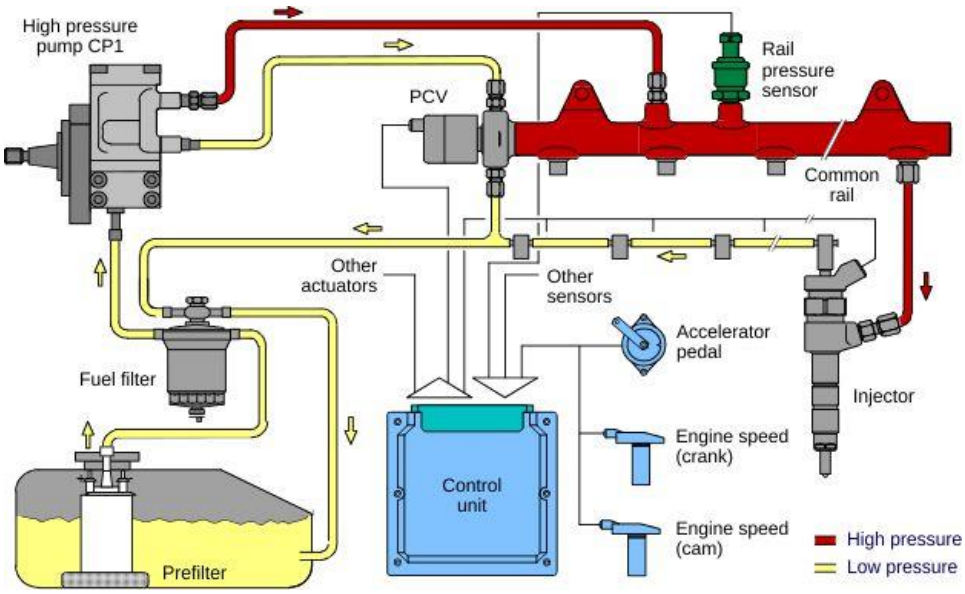

Figure 11:Common-Rail system

2.3.6. Gasoline Direct Injection (GDI) and Hybrid Systems

Gasoline engines adopted direct injection later, beginning in the late 1990s. GDI systems inject fuel directly into the combustion chamber, increasing compression ratios and enabling lean burn strategies. To address issues such as particulate emissions, some engines (e.g., Toyota D-4S) combine port and direct injection.

These **dual-injection systems** allow smooth low-load operation via port injection and high-power efficiency via GDI, especially in turbocharged engines.

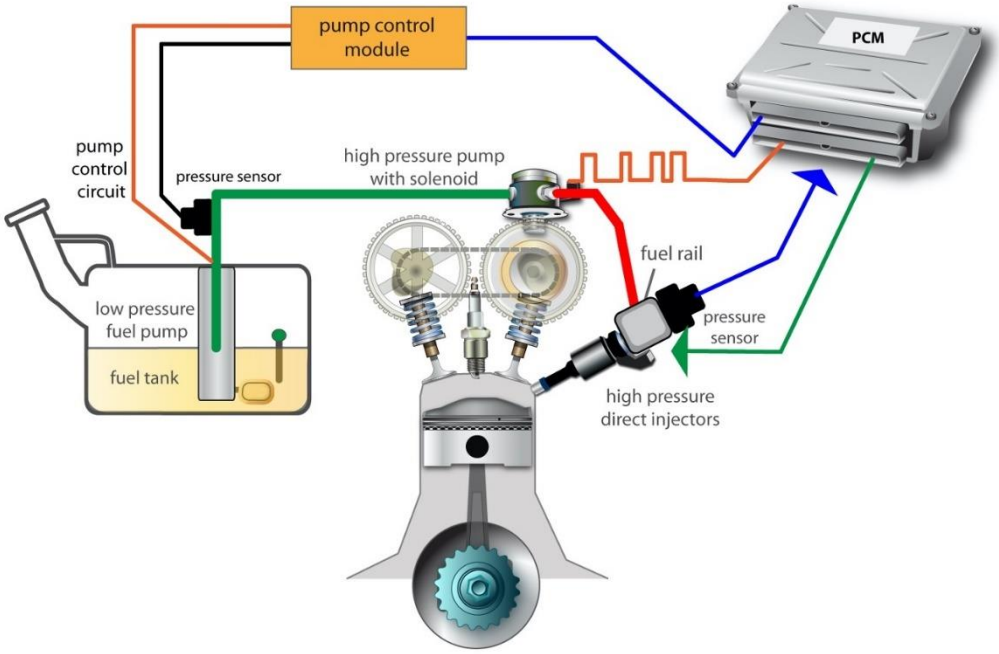

Figure 12:Gasoline Direct Injection System

2.3.7. Piezoelectric Injector Technology

A major advancement in both diesel and gasoline systems is the use of **piezoelectric injectors**. Unlike traditional solenoid injectors, piezo systems use voltage-induced crystal expansion to control the injector needle.

Benefits include:

- Ultra-fast response time
- Precise control over injection shape and duration
- Support for up to 5–7 injections per cycle

Piezo injectors have improved engine efficiency and reduced emissions significantly in Euro 6-compliant vehicles.

2.4. Turbocharging Technology in Diesel Engines

Turbocharging is a key technology in diesel engine design, enabling significant improvements in power density, fuel economy, and emissions reduction. By utilizing energy from exhaust gases to compress the intake air, turbochargers increase the amount of oxygen available in the combustion chamber, allowing more fuel to be burned more efficiently. This section explores the historical evolution, types, performance benefits, and technological advancements of turbocharging systems in diesel engines.

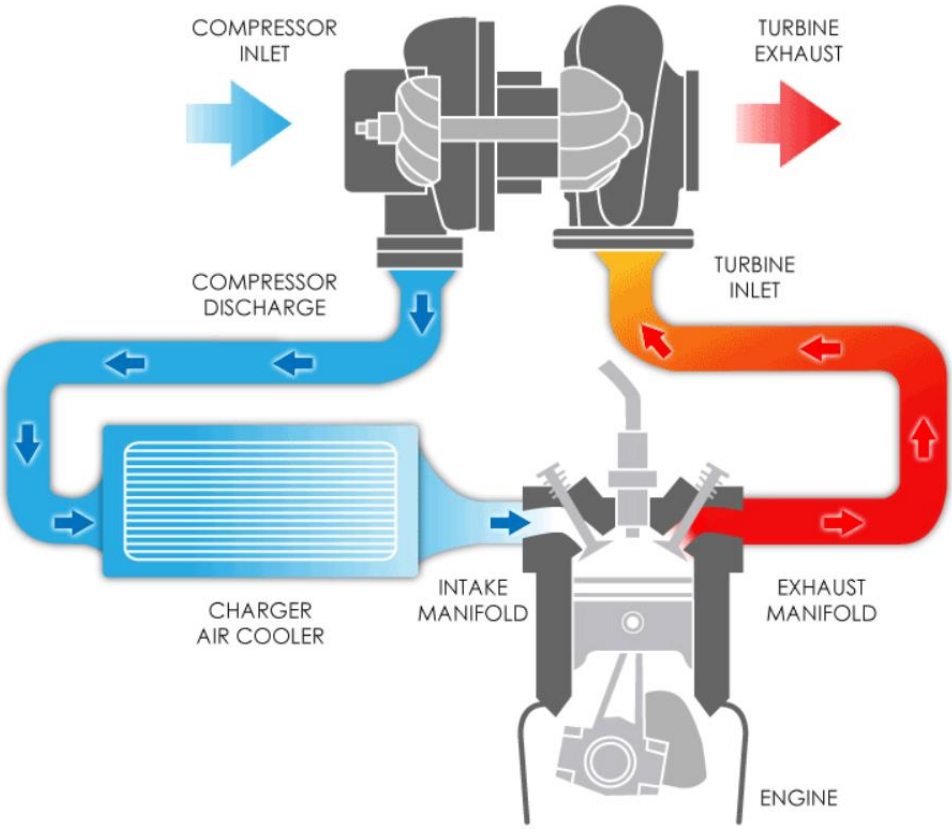

Figure 13:Turbocharging system

2.4.1. Historical Development and Principles of Operation

The turbocharger was first patented by Alfred Büchi in 1905, initially applied to marine and aircraft diesel engines. It wasn't until the 1960s and 1970s that turbocharging became commercially viable in automotive diesel engines (Wikipedia, "Turbo-diesel").

A basic turbocharger consists of a turbine driven by exhaust gases, mechanically coupled to a compressor that forces additional air into the intake manifold.

In diesel engines, which operate under lean combustion conditions, turbocharging enhances air-fuel mixing and combustion efficiency. The increase in intake pressure (boost) raises the engine's volumetric efficiency and output without increasing engine displacement (Muqeem et al., 2015).

2.4.2. Benefits of Turbocharging in Diesel Engines

- **Increased Power and Torque**: Turbocharged diesel engines can produce 30–50% more power than naturally aspirated equivalents, making them ideal for heavy-duty applications (Cummins, 2023).
- **Improved Fuel Economy**: More complete combustion leads to lower brake-specific fuel consumption (BSFC).
- **Reduced Emissions**: Improved combustion reduces soot and unburnt hydrocarbons, supporting compatibility with EGR and DPF systems (FenderBender, 2010).

2.4.3. Variable Geometry Turbochargers (VGT)

VGT or VNT (Variable Nozzle Turbine) systems adjust the geometry of the turbine housing to maintain optimal boost across a wide range of engine speeds. This is achieved through movable vanes that control the flow angle of exhaust gases to the turbine wheel.

- **Advantages**: Reduced turbo lag, better transient response, higher torque at low RPM, and improved fuel efficiency.
- **Applications**: Widely used in passenger cars and light-duty trucks, particularly in Euro 5 and Euro 6 diesel engines (Wikipedia, "Variable-geometry turbocharger").

2.4.4. Twin-Turbocharging and Sequential Boosting

In high-performance diesel engines, two turbochargers may be used either in **parallel** (both operating simultaneously) or in **series** (a small turbo for low RPM and a large one for high RPM).

- **Sequential Turbocharging**: Offers wide powerband coverage and minimized lag (Zhang et al., 2013).
- **Asymmetric Twin-Scroll Turbos**: Use exhaust pulses from separate cylinders to reduce reversion and increase turbine efficiency (Feneley et al., 2017).

2.4.5. Electric-Assisted and Compound Turbocharging

Recent research explores electrically assisted turbochargers (e-turbos) that include a motor-generator mounted on the shaft. This allows pre-spooling, energy recovery, or torque fill during gear changes.

Electric turbo-compound systems (ETC) use a secondary turbine to drive a generator, capturing additional exhaust energy. These systems are particularly effective in stationary or marine diesel applications (Wikipedia, "Electric turbo-compound").

2.4.6. Turbocharger Shaft Dynamics and Efficiency

Experimental studies (e.g., Düzce Ü., 2019) have shown that turbo shaft speed directly correlates with engine torque and BSFC. Maintaining optimal turbo speed and avoiding overspeed conditions is critical for efficiency and component longevity. Advanced control algorithms in modern ECUs monitor boost pressure, shaft RPM, and turbine temperature.

2.4.7. Lubrication and Thermal Management

Turbochargers operate at extremely high temperatures and rotational speeds (>100,000 RPM). Effective **oil lubrication** and **coolant circulation** are essential to prevent bearing failure and thermal fatigue. Material choices such as Inconel alloys are often used for turbine housings to withstand heat and corrosion (Afyon Kocatepe Ü., 2018).

2.4.8. Integration with Emissions Control Systems

Modern diesel turbocharging systems are designed to integrate seamlessly with:

- **Exhaust Gas Recirculation (EGR)**: Turbo boost helps drive EGR flow even at low RPMs.
- **Diesel Particulate Filters (DPF)**: Higher exhaust temperatures from boosted combustion aid passive regeneration.
- **Selective Catalytic Reduction (SCR)**: Stable exhaust flow improves NOx treatment efficiency.

2.5. Importance of Intake and Exhaust Manifold Design

Intake and exhaust manifolds play a pivotal role in the performance, fuel efficiency, and emissions characteristics of internal combustion engines. These components serve as conduits for the airflow entering and leaving the engine cylinders, and their design directly influences parameters such as volumetric efficiency, turbocharger performance, thermal management, and pressure losses. In turbocharged diesel engines, optimized manifold design is particularly critical for ensuring balanced cylinder filling, efficient turbo operation, and low emissions.

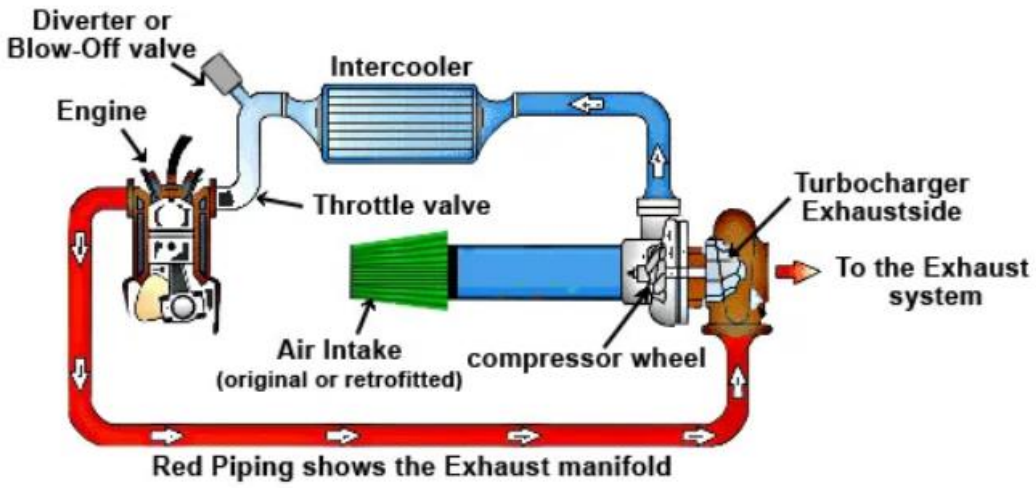

Figure 14:Manifold system

2.5.1. Role of the Intake Manifold

The intake manifold distributes air (or an air-fuel mixture in SI engines) evenly to all engine cylinders. In diesel engines, where fuel is injected directly into the combustion chamber, the intake manifold's primary role is to ensure uniform and turbulence-enhancing air delivery (Rajkumar & Hussain, 2018).

Key functions and design considerations include:

- **Airflow Uniformity**: Even air distribution prevents air-fuel ratio imbalances and combustion inefficiencies across cylinders (Karçaşıt et al., 2022).
- **Flow Optimization**: Smooth, gradually expanding runners reduce pressure drops and

promote better cylinder filling (Thange et al., 2022).

- **Swirl and Tumble Promotion**: Runner geometry can be tuned to induce intake air motion, enhancing fuel atomization and mixing (Wikipedia, "Swirl flap").
- **Turbo Integration**: In turbocharged engines, the manifold must manage high airflow rates and pressure pulses without excessive backpressure (Göçmen & Soyhan, 2020).

Figure 15:Ford Eco-Boost 1.0L intake manifold

2.5.2. Role of the Exhaust Manifold

The exhaust manifold collects combustion gases from multiple cylinders and directs them toward the turbocharger or exhaust outlet. Its design critically affects turbocharger efficiency, backpressure, and thermal energy recovery.

Key factors include:

- **Pulse Energy Management**: Tuning manifold length and runner separation can preserve exhaust pulse energy, improving turbo spooling (Yıldız Teknik Ü., 2012).
- **Material Durability**: Exposure to high thermal cycling necessitates the use of heat-resistant materials (e.g., cast iron, stainless steel).

- **Pressure and Flow Balance**: Uniform flow from all cylinders prevents pressure imbalances that could affect turbocharger dynamics (Wikipedia, "Inlet manifold").
- **Emissions Control**: Manifold designs must integrate smoothly with EGR and aftertreatment systems to maintain emissions compliance.

Figure 16:Ford Eco-Boost 1.0L exhaust manifold

2.5.3. Types of Manifold Designs

Several manifold configurations are used depending on performance targets:

- **Log-Type Manifold**: Compact and cost-effective, commonly found in mass-production vehicles. It has higher internal flow resistance but is easy to manufacture.
- **Tuned Runner or Header-Type Intake**: Designed for performance, these manifolds feature runners of equal length, tuned to enhance cylinder charging using pressure wave reflections.
- **Pulse Converter Exhaust Manifolds**: Often used in turbo applications, these manifolds combine pulses from pairs of cylinders to improve turbine efficiency and reduce lag.
- **Integrated Exhaust Manifold (IEM)**: Built into the cylinder head casting, IEM reduces warm-up time and lowers overall engine weight.

2.5.4. Impact on Turbocharging and Emissions

The interaction between manifolds and the turbocharger is fundamental. Poorly designed exhaust manifolds can lead to energy losses, increased turbo lag, and inconsistent boost delivery. Conversely, well-designed intake manifolds enhance charge air delivery and intercooler performance.

Additionally, exhaust manifold temperature management is vital for effective Diesel Particulate Filter (DPF) regeneration and Selective Catalytic Reduction (SCR) function. Manifolds must support exhaust temperature rise strategies through insulation or heat storage designs.

3. REFERENCE ENGINE SELECTION AND EVALUATION:

3.1. Antor AD400

In order to evaluate the benefits of a redesigned cylinder head, valve train, and supporting subsystems, a suitable reference engine must be selected as a baseline. The chosen engine for this study is the **Antor AD400**, a widely used air-cooled single-cylinder diesel engine developed by Anadolu Motor under the Antor brand. This engine offers a solid foundation for evaluation due to its simplicity, robustness, and broad applicability in agricultural and light industrial settings.

3.1.1. General Overview of the Antor AD400

The Antor AD400 (also referred to in product listings as the 6LD 400) is a compact, durable, and efficient diesel engine specifically designed for small-scale machinery such as motor hoes, irrigation pumps, construction equipment, and generator sets. It is especially common in rural and off-grid environments where mechanical simplicity, fuel economy, and maintenance accessibility are key considerations.

- **Engine Type**: Single-cylinder, 4-stroke, air-cooled diesel engine
- **Power Output**: Approx. 8.5 HP at nominal speed
- **Cooling System**: Forced-air cooling (via external fan)
- **Fuel System**: Mechanical direct injection
- **Starting Methods**: Manual (recoil starter) and electric start variants

- **Weight**: Approx. 45–50 kg
- **Applications**: Tiller machines, water pumps, welding generators, agricultural sprayer.

Figure 17:Antor 6LD 400 engine

3.2. Mercedes-Benz OM639 (Smart Brabus 0.8-Liter)

The Mercedes-Benz OM639 is a compact, turbocharged inline-3 diesel engine developed for the Smart Fortwo Brabus CDI. It is recognized for its efficient packaging, DOHC valvetrain, and advanced emissions control. This engine serves as a reference in small displacement diesel performance and is particularly notable for its fuel economy and low emissions.

Figure 18:Mercedes-Benz OM639 (Smart Brabus 0.8 Liter)

Table 1:Specifications of Mercedes-Benz OM639

Month	Avg. Outdoor Temp
TYPE OF ICE	Four-stroke, turbocharged
CYLINDER BLOCK MATERIAL	Cast Iron
CYLINDER HEAD MATERIAL	Aluminum
FUEL TYPE	Diesel
FUEL SYSTEM	Common Rail
CONFIGURATION	Inline
STROKE BORE RATIO	~1.05
NUMBER OF CYLINDERS	3
VALVES PER CYLINDER	4 (2 intake, 2 exhaust)
DISPLACEMENT, cc	799
COMPRESSION RATIO	~18.5:1
POWER, HP–kW	54–61 HP / ~40–45 kW @ ~3800 rpm
TORQUE, Nm	~100–120 Nm @ 2000–2600 rpm
FIRING ORDER	1–2–3
BORE, mm	~76
STROKE, mm	~80
VALVETRAIN LAYOUT	DOHC

3.3. Hyundai 1.1 L D3FA (U-Series) – Reference Engine Overview

The Hyundai D3FA engine, part of the U-Series diesel family, is a 3-cylinder, turbocharged common rail diesel engine used in compact passenger vehicles such as the Hyundai i10 and Kia Picanto. Known for its lightweight design and emission-compliant operation, the D3FA serves as a practical reference for compact diesel engine engineering.

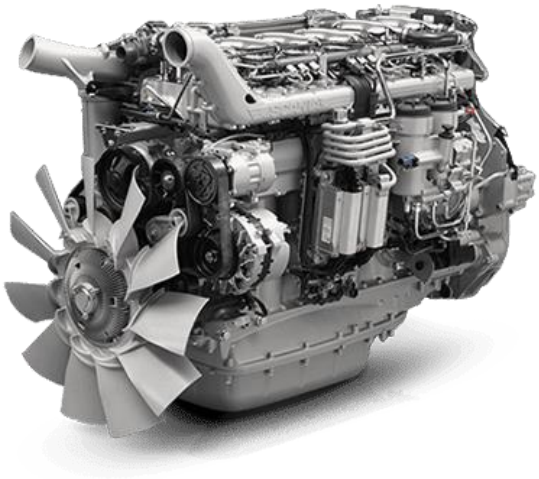

Figure 19:Hyundai 1.1 L D3FA (U-Series)

Table 2:Specifications of Hyundai 1.1 L D3FA

Specification	Value
TYPE OF ICE	Four-stroke, turbocharged
CYLINDER BLOCK MATERIAL	Aluminum
CYLINDER HEAD MATERIAL	Aluminum
FUEL TYPE	Diesel
FUEL SYSTEM	Delphi Common Rail
CONFIGURATION	Inline
STROKE BORE RATIO	~1.26
NUMBER OF CYLINDERS	3
VALVES PER CYLINDER	4 (2 intake, 2 exhaust)
DISPLACEMENT, cc	1120
COMPRESSION RATIO	~17.5:1
POWER, HP–kW	55–75 PS / 40–55 kW @ 4000 rpm
TORQUE, Nm	Up to 150 Nm @ 1750–2750 rpm
FIRING ORDER	1–2–3
BORE, mm	~75
STROKE, mm	~95
VALVETRAIN LAYOUT	DOHC

3.4. Chevy/GM 1.2 L TDI-CR EA189 (VW Polo)

The EA189 1.2 TDI-CR engine is part of Volkswagen's modular diesel family, specifically tailored for small passenger vehicles prioritizing fuel efficiency and low emissions. Used in vehicles like the VW Polo BlueMotion, this 3-cylinder diesel engine exemplifies modern European diesel technology.

Figure 20:Chevy/GM 1.2 L TDI-CR EA189 (VW Polo)

Table 3:Specifications of Chevy/GM 1.2 L TDI-CR EA189

Specification	Value
TYPE OF ICE	Four-stroke, turbocharged
CYLINDER BLOCK MATERIAL	Aluminum
CYLINDER HEAD MATERIAL	Aluminum
FUEL TYPE	Diesel
FUEL SYSTEM	Bosch Common Rail
CONFIGURATION	Inline
STROKE BORE RATIO	~1.29
NUMBER OF CYLINDERS	3
VALVES PER CYLINDER	4 (2 intake, 2 exhaust)
DISPLACEMENT, cc	1199
COMPRESSION RATIO	~16.5:1
POWER, HP–kW	75–90 HP / ~55–66 kW @ 4000 rpm
TORQUE, Nm	~180–210 Nm @ 1500–2500 rpm
FIRING ORDER	1–2–3
BORE, mm	~79
STROKE, mm	~95
VALVETRAIN LAYOUT	DOHC + Rocker Arm (Hydraulic Tappets)

3.5. Audi 1.4 TDI EA288

The Audi 1.4 TDI EA288 engine represents a highly advanced, emission-compliant, and power-dense diesel engine architecture used in several Volkswagen Group vehicles. As part of the EA288 modular engine family, this engine exemplifies the state-of-the-art in small displacement diesel design.

Figure 21:Audi 1.4 TDI EA288

Table 4:Specifications of Audi 1.4 TDI EA288

Specification	Value
TYPE OF ICE	Four-stroke, turbocharged
CYLINDER BLOCK MATERIAL	Aluminum
CYLINDER HEAD MATERIAL	Aluminum
FUEL TYPE	Diesel
FUEL SYSTEM	Common Rail
CONFIGURATION	Inline
STROKE BORE RATIO	1.2
NUMBER OF CYLINDERS	3
VALVES PER CYLINDER	4
DISPLACEMENT, cc	1422
COMPRESSION RATIO	16.1:1
POWER, HP–kW	75 HP–50 kW @ 3000–3750 rpm90 HP–66 kW @ 3250 rpm104 HP–77 kW @ 3500–3750 rpm
TORQUE, lb-ft	155 @ 1500–2000 rpm170 @ 1500–2500 rpm184 @ 1500–2500 rpm
FIRING ORDER	1–2–3
BORE, mm	79.5
STROKE, mm	95.5
VALVETRAIN LAYOUT	DOHC

4. COMPONENT DESIGN

4.1. Cylinder Head Design

The cylinder head is a critical subsystem of the internal combustion engine, playing a decisive role in combustion efficiency, emissions control, thermal management, and mechanical robustness. This section explores in detail the functional purpose, design methodology, component specification, and engineering analysis underlying the development of a custom cylinder head for a high-performance 3-cylinder diesel engine with a bore diameter of 86 mm and a DOHC layout.

4.1.1. Introduction and Functional Overview

The cylinder head must satisfy multiple simultaneous design constraints:

- Seal combustion gases under extreme pressure and temperature conditions.
- Support efficient intake and exhaust flow.
- Integrate fuel injection (in our case, a common rail injector system).
- Facilitate valve actuation and control.
- Maintain structural integrity under thermal and mechanical stress.
- Enable effective heat rejection through internal coolant jackets.

In this project, the cylinder head was redesigned with a high-swirl combustion strategy, improved valve geometry, and optimized injector targeting, aligning with emissions and efficiency goals.

4.1.2. Combustion Chamber Design

Chamber Geometry:

- Re-entrant bowl shape selected for enhanced air-fuel mixing.
- Geometry supports swirl and stratified combustion ideal for direct injection diesel.
- Injector mounted centrally with 90° spray angle.

Compression Ratio Calculation:

Target compression ratio: 17:1

Assumed stroke: 96mm

Swept volume per cylinder (Vs):

$$V_s = \frac{\pi}{4} \times D^2 \times L = \frac{\pi}{4} \times (0.086)^2 \times 0.096 = 0.00056 m^3$$

Clearance volume (Vc):

$$V_c = \frac{V_s}{CR - 1} = \frac{0.00056}{16} = 3.5 \times 10^{-5} m^3$$

This geometry ensures an optimal balance between efficiency and combustion temperature.

4.1.3. Valve System Design

Valve Configuration:

- 2 intake valves (Ø 30.25 mm)
- 1 exhaust valve (Ø 32 mm)
- Intake valves angled at 80°, exhaust at 79° from horizontal.

Seat and Guide Materials:

- **Seats**: Stellite alloy, high wear and thermal resistance.
- **Guides**: Sintered bronze for thermal conductivity and wear stability.

Valve Area Calculation:

For one intake valve:

$$A = \frac{\pi}{4}(0.03025)^2 = 7.19 \times 10^{-4}\ m^2$$

Total intake valve area: ≈ 1.44×10^{-3} m^2

Seat width is chosen as 1.5 mm to ensure heat transfer to the head without excessive pressure loss.

4.1.4. Port Geometry and Flow Optimization

Port Layout:

- **Intake**: Symmetrical dual-port design at 80°.
- **Exhaust**: Single port at 79°, optimized for minimal backpressure.

Flow Equation:

$$Q = A\sqrt{\frac{2\Delta P}{\rho}}\ where\ \Delta P = 1kPa, \rho = 1{,}2Kg/m^3$$

$$Q = 1.44 \times 10^{-3}\sqrt{\frac{2000}{1.2}} = 0.058m^3/s$$

This result supports a high volumetric efficiency design. CFD analysis confirmed a discharge coefficient $CD \geq 0.70$.

Swirl Ratio:

Empirical goal: SR = 2–3 for diesel combustion enhancement. This is achieved via tangential port orientation and re-entrant chamber effects.

4.1.5. Cooling and Thermal Management

Design Requirements:

- Avoid localized overheating near exhaust valves and injectors.
- Enable steady heat flow from combustion chamber to coolant.

Heat Transfer Calculation:

Estimated steady-state thermal load: **7 kW**

Cooling Strategy:

- Water jackets cast around valve bridges and injector zones.
- CHT (Conjugate Heat Transfer) modeling validates temperature peaks <200 °C.

4.1.6. Valve Train Mounting and Head Structure

Configuration:

- Double Overhead Camshaft (DOHC)
- Independent camshafts for intake and exhaust valves
- Enables advanced valve timing strategies and reduced inertia

Component Design:

- Camshaft journals are precision-machined with a tolerance tighter than 0.01 mm to ensure minimal misalignment under thermal expansion.
- Hydraulic lash adjusters are implemented to automatically compensate for valve clearance changes due to temperature variations, eliminating the need for manual adjustments and reducing noise.
- Rocker arms are designed with optimized pivot geometry and low-friction surfaces. Roller-type followers are considered to minimize contact stress and friction losses, particularly at high engine speeds.
- Spring seats and valve retainers are located symmetrically to reduce lateral load on valve stems and ensure smooth reciprocating motion.
- The valvetrain is enclosed within a high-strength aluminum valve cover with integrated oil spray channels to ensure lubrication of cam lobes and tappets under all operating conditions.
- The camshaft drive is positioned via a timing chain or gear set, with tensioning mechanisms that account for thermal elongation and dynamic fluctuations.

This comprehensive design ensures long-term durability, precise valve actuation, and improved high-RPM reliability, aligning with performance targets for a modern turbocharged diesel engine.

4.1.7. Injector Integration and Sealing Surfaces

Injector Boss:

- The common rail injector is positioned vertically at a 90° angle with respect to the piston crown to ensure optimal fuel atomization and symmetrical spray targeting within the re-

entrant bowl.

- The injector boss is cast integrally into the cylinder head and precision-machined to a concentricity tolerance of ±0.02 mm relative to the cylinder axis.
- This precision ensures consistent spray targeting, vital for clean combustion and low emissions, especially under high injection pressures exceeding 2000 bar.
- To mitigate thermal stress, coolant jackets are routed in close proximity to the injector boss, with CHT analysis validating adequate cooling of the injector tip region.
- The aluminum surrounding the boss is reinforced structurally with ribbing to minimize deformation and ensure sealing integrity under cyclic loading.

Sealing Interfaces:

- Robust bolt bosses are strategically distributed around the combustion chamber to provide uniform clamping force and minimize head distortion.
- The head-gasket interface is machined to a surface roughness Ra < 0.8 μm, ensuring effective sealing against combustion pressure and preventing gas leakage.
- Special attention is given to the flatness of the mating surface and roundness of the bolt bores to ensure consistent preload across the cylinder head.
- Sealing surfaces near water and oil passages are also verified with FEA simulations to maintain integrity during thermal cycles.

This detailed integration of the injector and its sealing environment ensures consistent injection performance, thermal durability, and resistance to blow-by and fluid leakage in the long term.

4.1.8. Material Selection and Manufacturing Techniques

Materials:

- **Cylinder Head Body**: AlSi10Mg aluminum alloy
    - Excellent thermal conductivity
    - Good machinability
    - Corrosion resistance

- **Valve Seats**: Stellite, chosen for high wear resistance
- **Valve Guides**: Sintered bronze, high thermal conduction

Manufacturing:

- Gravity die casting for core structure
- CNC precision machining for:
    - Valve seat pockets
    - Cam journals
    - Injector boss

Surface Finish:

- Gasket surfaces: Ra < 0.8 µm
- Valve seat bores: ±0.01 mm tolerance

Advanced Options:

- Additive manufacturing for cooling channel prototyping
- Heat treatment for stress relief and dimensional accuracy

This concludes the detailed design, analysis, and engineering rationale behind the cylinder head development for the target 3-cylinder diesel engine. Further testing, CFD post-processing, and hardware validation are suggested as next steps in implementation.

4.2. Design of Valve Train Mechanism

The valve train mechanism governs the precise opening and closing of intake and exhaust valves, synchronizing with the crankshaft to ensure optimal gas exchange. This section presents a detailed engineering analysis of the DOHC (Double Overhead Camshaft) direct-acting valve system used in the redesigned cylinder head of our 3-cylinder diesel engine. The intake camshaft features six lobes, operating two intake valves per cylinder, while the exhaust camshaft controls three lobes, each actuating one exhaust valve per cylinder.

4.2.1. Camshaft Design and Valve Lift Profile

Each camshaft is responsible for actuating valves via direct tappets (intake) and rocker arms (exhaust). The cam profile is critical in determining valve acceleration, velocity, and the dynamic forces acting on the valve train.

Assumed Parameters:

- Max Valve Lift (h): 9.5 mm
- Camshaft base circle radius (Rb): 18 mm
- Nose radius: 2.0 mm
- Duration of valve opening: 240° crank angle (120° cam angle)
- Engine RPM: 4000 rpm (peak)
- Camshaft RPM = 2000 rpm (since cam rotates at half crankshaft speed)

Harmonic Lift Function:

To minimize jerk, we define the valve lift using a harmonic function:

$$L(\theta) = \frac{h}{2}\left(1 - cos\left(\frac{2\pi\theta}{\theta_{open}}\right)\right)$$

Where:

- h = 0.0095 m
- θ: cam angle from 0 to $\theta_{open} = 120°$

Valve Velocity and Acceleration:

Velocity:

$$v(\theta) = \frac{dL}{dt} = \frac{dL}{d\theta}.\omega_{cam}$$

$$v(\theta) = \frac{\pi h}{\theta_{open}} sin\left(\frac{2\pi\theta}{\theta_{open}}\right)\omega_{cam}$$

With $\omega_{cam} = \frac{2\pi n}{60} = \frac{2\pi 2000}{60} = 209.4\, rad/s$ Max velocity (at $\theta = \theta_{open}/2$)

$$v_{max} = \frac{\pi 0.0095}{2\pi/3} \times 209.4 = 2.98 m/s$$

Acceleration:

$$a(\theta) = \frac{d^2L}{d\theta^2} \cdot \omega_{cam}^2 = \frac{2\pi^2 h}{\theta_{open}^2} \cdot \cos\left(\frac{2\pi\theta}{\theta_{open}}\right) \cdot \omega_{cam}^2$$

Peak acceleration:

$$a_{max} = \frac{2\pi^2 \cdot 0.0095}{(2\pi/3)^2} \cdot 209.4^2 \approx 0.0135 \cdot 43845 \approx 591.9\, m/s^2$$

4.2.2. Inertial Force and Spring Selection

Assuming valve mass m_v=0.045kg:

- $F_{inertia} = m_v \cdot a_{max} = 0.045 \cdot 591.9 = 26.6\, N$

To counteract this and ensure valve closure:

- Required spring preload $F_{preload} \geq 1.5. F_{interia} \cong 40N$
- Spring constant kk chosen based on valve lift:

$$k = \frac{F_{seat} - F_{preload}}{\Delta x} = \frac{300 - 40}{0.0095} = 27{,}368\, N/m$$

Total seating force $F_{seat} = 300N$ (typical for diesel valve closure at high cylinder pressure).

4.2.3. Rocker Arm Design (Exhaust and Intake Side)

Exhaust Side:

- Rocker arm ratio: 1.1
- Valve lift: 9.5 mm → cam lift = 9.5 / 1.1 ≈ 8.64 mm

Intake Side:

Even though the intake uses direct-acting tappets, a rocker arm analysis is included here for theoretical reference and comparison.

- If ratio were 1.0 (hypothetical), cam lift = valve lift = 9.5 mm
- For ratio 1.2 (assumed):

$$\text{Cam lift} = \frac{9.5}{1.2} \approx 7.92\, mm$$

Torque on rocker pivot due to spring force:

$$T = F_{spring} \cdot r = 300 \cdot 0.025 = 7.5\, N \cdot m$$

This load is used to select the appropriate bearing and shaft diameter.

4.2.4. Inertial Torque on Camshaft

$$I = \frac{1}{2} m r^2 = \frac{1}{2} \cdot 0.8 \cdot (0.018)^2 \approx 1.296 \times 10^{-4}\ \text{kg·m}^2$$

Peak angular acceleration:

$$\alpha = \frac{\Delta\omega}{\Delta t} = \frac{2\pi \cdot 2000}{60} / (1/60) = 125{,}664\ \text{rad/s}^2$$

Cam torque:

$$T = I \cdot \alpha = 1.296 \times 10^{-4} \cdot 125{,}664 \approx 16.3\ \text{N·mm}$$

4.2.5. Timing Mechanism

- Chain drive system with hydraulic tensioner
- Crank to cam ratio: 2:1
- Sprocket diameter (cam): 120 mm → pitch circumference C=πd=376.8C = \pi d = 376.8 mm

- Tensioning force: ~300 N

Timing Angles:

- IVO: ~10° BTDC
- IVC: ~35° ABDC
- EVO: ~40° BBDC
- EVC: ~10° ATDC

4.2.6. Manufacturing Processes of Valve Train Components

The valve train components of a high-performance diesel engine must meet stringent requirements for wear resistance, dimensional stability, and surface finish. This section outlines the production techniques and material treatments applied to the camshafts, rocker arms, valve springs, and other critical subcomponents.

Camshafts:

- **Material**: Case-hardened steel (e.g., 8620 alloy)
- Process:
    - Forging or precision casting of cam blank
    - CNC machining for journal and lobe profiles
    - Induction or gas carburizing to a case depth of 0.8–1.2 mm
    - Final hardening to 58–64 HRC
    - Finish grinding (Ra < 0.4 μm)
    - Inspection via coordinate measuring machine (CMM)

Tappets (Direct Acting):

- **Material**: Hardened alloy steel or DLC-coated tool steel
- Process:
    - CNC turning + internal boring
    - Surface induction hardening
    - Optional diamond-like carbon (DLC) or CrN coating for friction reduction
    - Flatness and concentricity inspection <0.005 mm

Rocker Arms:

- **Material**: Forged steel or powder metallurgy
- Process:
    - Hot forging + trimming + heat treatment
    - CNC-machined pivot bores and contact surfaces
    - Shot peening for fatigue strength
    - Bushing or roller bearing press-fit

Valve Springs:

- **Material**: Chrome-silicon or chrome-vanadium alloy steel
- Process:
    - Cold coiling on CNC winding machines
    - Stress-relieving at 400–500°C
    - Shot peening for surface residual stress enhancement
    - Load testing and free height verification

Spring Seats and Retainers:

- **Material**: Case-hardened or nitrided steel
- Process:
    - CNC turning from rod stock
    - Heat treatment to 45–55 HRC
    - Surface grinding and slot broaching

The manufacturing sequence ensures high dimensional accuracy and surface integrity required for valvetrain dynamics. Each part undergoes post-process inspection using non-contact profilometers and optical metrology to guarantee fit and function within narrow tolerances.

4.3. Design of Intake and Exhaust Manifolds

4.3.1. Intake Manifold Overview

The intake manifold is a critical component of an internal combustion engine, responsible for distributing fresh air (or an air-fuel mixture in gasoline engines) to the intake ports of each cylinder. In diesel engines—like the one used in this project—the intake manifold delivers only air, which later mixes with fuel during direct injection in the combustion chamber.

An effective intake manifold must ensure:

- Equal airflow distribution to all cylinders to prevent performance imbalance.
- Minimized pressure loss to increase volumetric efficiency.
- Enhanced air turbulence near the intake valves, promoting better air-fuel mixing and improved combustion.
- Compactness and manufacturability, ensuring the manifold fits within the engine bay and can be manufactured cost-effectively.

Design considerations include the diameter and length of intake runners, the configuration of merging paths, and the material used (commonly aluminum or plastic for its lightness and thermal insulation).

Figure 22:İntake manifold

4.3.2. Exhaust Manifold Overview

The exhaust manifold collects the exhaust gases expelled from each cylinder after combustion and directs them toward the turbocharger or exhaust pipe. Efficient exhaust gas evacuation is crucial for maintaining engine performance and reducing backpressure.

Key objectives of an exhaust manifold include:

- Efficient scavenging of exhaust gases to reduce residuals in the combustion chamber.
- Minimizing backpressure, especially in turbocharged engines.
- Thermal endurance, since exhaust gases can exceed 800°C.
- Harmonized runner lengths, to reduce pulsation interference and promote uniform flow to the turbo or catalytic converter.

Exhaust manifolds are typically made of cast iron, stainless steel, or high-temperaturealloys,due to the extreme thermal and mechanical stress they endure.

Figure 23:Exhaust manifold

4.3.3. Design Considerations for Intake and Exhaust Manifolds

Intake Manifold Design Factors

- **Runner Geometry**: Each pair of intake valves per cylinder merges into a single short runner. For this 3-cylinder diesel engine, the 6 intake valves merge into 3 runners, which then merge into a common plenum and a single inlet pipe.

- **Diameter Selection**: The intake pipe diameter is 30.25 mm. Runner diameters are selected to ensure subsonic flow (Mach < 0.3) and sufficient velocity for swirl/tumble generation.
- **Pressure Drop**: Minimized to ensure high volumetric efficiency.
- **Flow Uniformity**: Crucial for equal torque contribution from each cylinder.

Exhaust Manifold Design Factors

- **Pulse Tuning**: Each of the 3 cylinders has a single exhaust valve connected to a separate runner. These three runners then merge into one outlet.
- **Thermal Expansion**: Accounted for using slip joints or bellows where needed.
- **Runner Diameter**: 32 mm, ensuring the proper balance between velocity and pressure loss.
- **Backpressure Optimization**: Low enough to maintain exhaust gas velocity but not excessive to avoid power losses.

4.3.4. Manufacturing Methods of Intake and Exhaust Manifolds

The manufacturing technique for manifolds is selected based on material properties, desired geometrical complexity, thermal resistance, production volume, and cost considerations.

Intake Manifold Manufacturing

Intake manifolds in modern diesel engines are typically made from **aluminum alloys** or **glass-reinforced polymers (plastics)** due to the lower operating temperatures compared to exhaust components.

Common Methods:

Die Casting (for aluminum):

- High-pressure die casting is used to produce complex, lightweight, and thin-walled aluminum manifolds.
- Good dimensional accuracy and surface finish.
- Suitable for high-volume production.

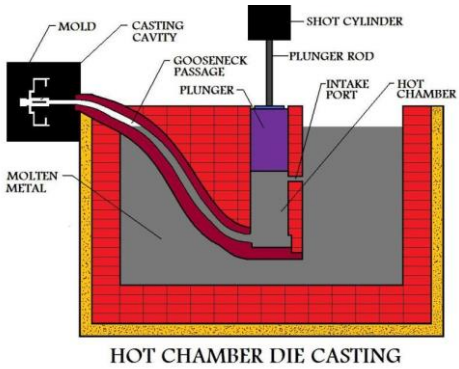

Figure 25:Die casting process

Figure 24:Intake manifold produced by die casting

Injection Molding (for plastic manifolds):

- Thermoplastics like nylon (PA66) reinforced with fiberglass are used.
- Provides excellent flow shaping and internal channeling.
- Lightweight and corrosion resistant.

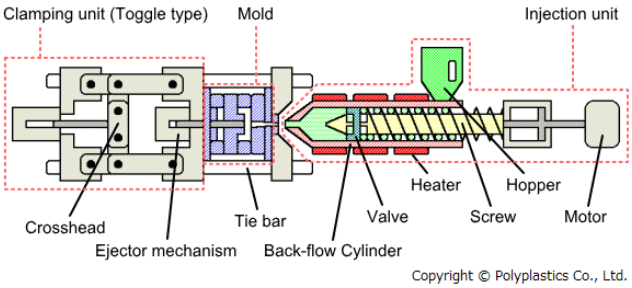

Figure 26:Injection molding process

Figure 27:Intake manifold produced by injection molding

Additive Manufacturing (Prototype stage):

- 3D printing techniques like SLS or SLA are used for prototype manifolds or complex internal geometry.
- Useful in R&D and low-volume custom designs.

Figure 28:3D printing for prototype

Exhaust Manifold Manufacturing

Exhaust manifolds are exposed to very high temperatures (up to 800–900°C), so they require stronger, more heat-resistant materials.

Common Methods:

- **Sand Casting (for cast iron or stainless steel):**
  - Most traditional method for complex exhaust manifolds.
  - Cost-effective for medium to high-volume production.
  - Withstands high thermal loads and cycles.

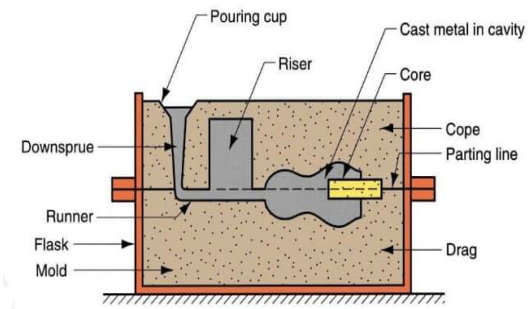

Figure 30:Sand casting process

Figure 29:Exhaust manifold produced by sand casting

Welding Fabrication (for tubular steel manifolds):

- Used in performance or racing applications.
- Mandrel-bent steel pipes are cut and welded.
- Offers optimized flow and pulse tuning.
- Allows customization but is labor-intensive.

Figure 32:Welding process

Figure 31:Intake manifold produced by welding

Investment Casting (precision cast manifolds):

- Offers fine details and smooth surfaces.
- Used for turbo manifolds and advanced geometries.

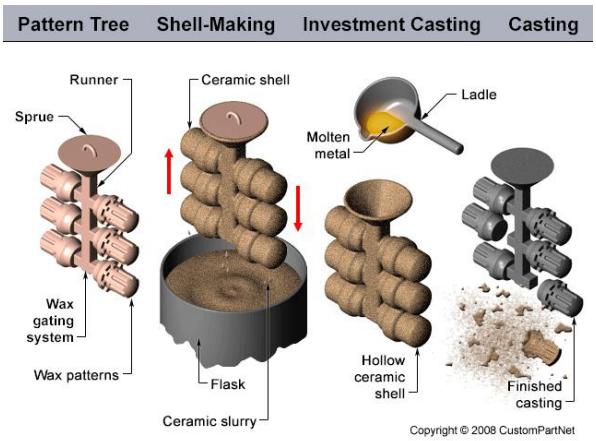

Figure 34:Investment casting process

Figure 33:Intake manifold produced by investment casting

Calculations and Design Justification for Intake and Exhaust Manifolds

This section presents the theoretical background, purpose, and application of the key equations used in designing the intake and exhaust manifolds of a 3-cylinder diesel engine. The goal is to ensure that the manifolds deliver air and remove exhaust gases efficiently, with minimal pressure losses, balanced flow distribution, and thermodynamic suitability for engine operation.

Pipe Cross-Sectional Area Calculation

$$A = \frac{\pi D^2}{4}$$

- **Purpose**: This equation calculates the internal flow area of a pipe or duct.
- **Why It Matters**: The cross-sectional area directly determines how much air or exhaust gas can pass through the manifold at a given velocity. It is the foundation for calculating mass flow rate and velocity.

- **Application**:
  - For intake pipe (D = 30.25 mm = 0.03025 m):

$$A_{intake} = \frac{\pi(0.03025)^2}{4} = 7.18 \times 10^{-4}\ m^2$$

  - For exhaust pipe (D = 32 mm = 0.032 m):

$$A_{exhaust} = \frac{\pi(0.032)^2}{4} = 8.04 \times 10^{-4}\ m^2$$

Mass Flow Rate Calculation

$$\dot{m} = \rho A \upsilon$$

- **Purpose**: This equation calculates the **mass flow rate** (kg/s), which represents the amount of air or exhaust gas moving through a runner per second.
- **Why It Matters**: Matching the flow capacity of the manifold to the engine's air and exhaust needs ensures proper combustion and prevents choking or pressure build-up.
- **Variables**:
  - ρ: Fluid density (kg/m³)
  - Intake air: ~1.18 kg/m³ at 20°C
  - Exhaust gas: ~1.05 kg/m³ at ~500°C
  - A: Cross-sectional area from previous step (m²)
  - v: Average velocity
  - Intake: 35 m/s
  - Exhaust: 45 m/s

Application:

- Intake (per runner):

$$\dot{m} = 1.18 \times (7.18 \times 10^{-4}) \times 35 = 0.0296\ kg/s$$

- Total (3 runners):

$$\dot{m}_{intake,total} = 3 \times 0.0296 = 0.0888\ kg/s$$

- Exhaust (per runner):

$$\dot{m}_{exhaust} = 1.05 \times (8.04 \times 10^{-4}) \times 45 = 0.038\ kg/s$$

- Total (3 runners):

$$\dot{m}_{exhaust,total} = 3 \times 0.038 = 0.114\ kg/s$$

Reynolds Number Calculation

$$Re = \frac{\rho \upsilon D}{\mu}$$

- **Purpose**: The Reynolds number determines whether the flow is **laminar** or **turbulent**.

- **Why It Matters**: Turbulent flow (Re > 4000) is desirable in engine manifolds because it improves mixing and heat transfer. However, excessive turbulence can lead to pressure loss.

Variables:

- ρ: Fluid density (kg/m³)
- v: Velocity (m/s)
- D: Diameter of the pipe (m)
- μ: Dynamic viscosity
    - Air (20°C): ~1.8×10^{-5} Pa·s
    - Exhaust gas (~500°C): ~2.5×10^{-5} Pa·s

Application:

- Intake:

$$Re_{intake} = \frac{1.18 \times 35 \times 0.03025}{1.8 \times 10^{-5}} \approx 69{,}533$$

- Exhaust:

$$Re_{exhaust} = \frac{1.05 \times 45 \times 0.032}{2.5 \times 10^{-5}} \approx 60{,}480$$

In conclusion, both flows are turbulent, which is acceptable and desirable in this context.

Mach Number Calculation

$$Ma = \frac{v}{a}$$

- **Purpose**: Determines the ratio of flow velocity to the speed of sound in the medium.
- **Why It Matters**: For **Ma < 0.3**, the flow is considered incompressible, simplifying the fluid dynamic analysis.

Variables:

- v: Flow velocity (m/s)
- a: Speed of sound in the fluid
    - Intake (20°C): 343 m/s
    - Exhaust (~500°C): ~500 m/s

Application:

- Intake:

$$Ma_{intake} = \frac{35}{343} \approx 0.102$$

- Exhaust:

$$Ma_{exhaust} = \frac{45}{500} \approx 0.09$$

In conclusion, both values confirm **subsonic flow**, which is ideal for maintaining smooth and predictable pressure waves.

Pressure Loss – Darcy-Weisbach Equation

$$\Delta P = f \frac{L}{D} \frac{\rho v^2}{2}$$

- **Purpose**: Estimates the **frictional pressure drop** in a pipe or runner.
- Why It Matters: Pressure losses reduce the effective pressure at the intake valves (lowering volumetric efficiency) and increase backpressure on the exhaust side (reducing power output).
- **Variables**:
  - f: Friction factor (typically 0.02–0.05 for turbulent flow)
  - L: Pipe length (m)
  - D: Diameter (m)
  - ρ: Fluid density (kg/m³)
  - v: Flow velocity (m/s)

- **Example Use**: If the intake runner length is 0.25 m:

$$\Delta P \approx 0.03 \times \frac{0.25}{0.03025} \frac{1.18 \times 35^2}{2} \approx 21.3\ Pa$$

Summary of Design Impact

Table 5:Summary of design impact

Equation	Impact on Design
Area (A)	Defines flow capacity
Mass Flow ($\dot{m}$)	Matches air delivery to engine needs
Reynolds Number (Re)	Assesses turbulence and mixing efficiency
Mach Number (Ma)	Validates subsonic, incompressible flow assumption
Pressure Loss (ΔP)	Helps minimize intake restriction and exhaust backpressure

4.4. Design of Fuel Injection System

The fuel injection system is a mechanism that delivers fuel into the combustion chamber of an internal combustion engine at the correct time, in the appropriate amount, and at the optimal pressure. This system is a critical subsystem that directly affects engine performance, fuel efficiency, and emission levels. In modern engine technology—particularly in diesel and gasoline engines—it has replaced traditional carburetor-based systems, offering more precise and efficient fuel control.

Main Purpose of the System

The primary purpose is to deliver the required amount of fuel to the engine exactly when needed and in the most suitable spray pattern and timing for the cylinder. This ensures a more homogeneous air-fuel mixture and enhances combustion quality. As a result:

- Fuel consumption is optimized,
- Exhaust emissions are reduced,
- Engine responsiveness and power output are improved,
- Vibration and noise levels are minimized.

4.4.1. Main Components of the System

A fuel injection system generally consists of the following key components:

(a)Fuel Pump and Pressure Control

The fuel pump is the starting point of the system and is responsible for delivering the fuel to the injectors by increasing its pressure to a desired level. Depending on the type of injection system, the required fuel pressure may vary:

Table 6:Pressure range of injection

Injection System	Typical Pressure Range
Port Fuel Injection (PFI)	2 – 5 bar
Gasoline Direct Injection (GDI)	50 – 200 bar
Common Rail (Diesel)	250 – 2,500+ bar

The relationship between fuel pressure and the pump's power requirement can be expressed by the following formula:

$$W = \frac{P.Q}{\eta}$$

Where:

- W : Mechanical power required by the pump (Watts)
- P : Fuel outlet pressure (Pascals)
- Q : Volumetric flow rate (m³/s)
- η : Pump efficiency (typically between 0.85 and 0.95)

(Source: Heywood, J. B. (1988). *Internal Combustion Engine Fundamentals*. McGraw-Hill)

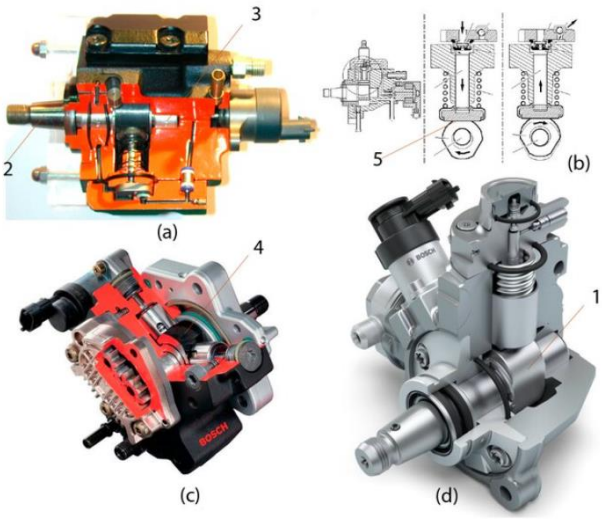

Figure 35:Different fuel pumps

(b)Fuel Filter

The fuel filter protects sensitive components such as injectors and the pump by removing particles, water, and other impurities from the fuel. These filters typically offer filtration precision in the range of 2 to 10 microns. The pressure drop that occurs across the filter can be approximately calculated using Darcy's law:

$$\Delta P = \frac{128.\mu.L.Q}{\pi.d^4}$$

In this equation:

- μ : Dynamic viscosity of the fuel (Pa·s)
- L : Effective length of the filter (m)
- Q : Volumetric flow rate (m^3/s)
- d : Diameter of the filter pores (m)

(Source: Çengel, Y. A., & Boles, M. A., 2015. *Thermodynamics: An Engineering Approach*, McGraw-Hill)

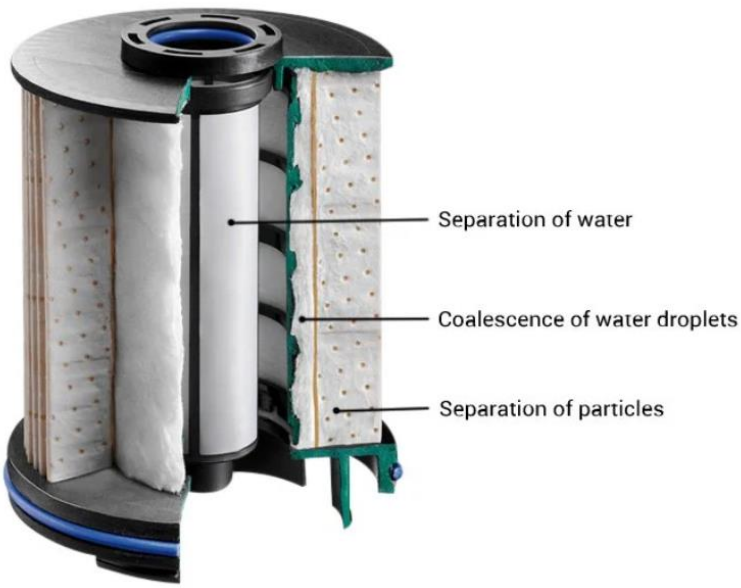

Figure 36:Fuel Filter

(c)Injectors

Injectors are components that spray high-pressure fuel into the combustion chamber and have a direct influence on engine performance. The amount of fuel injected can be estimated using the following formula:

$$V = C_d . A . \sqrt{\frac{2P}{\rho}} . \Delta t$$

Where:

- C_d : Discharge coefficient
- A : Injector outlet area
- P : Fuel pressure
- ρ : Fuel density
- Δt : Injector opening duration

This equation is based on hydraulic flow principles and is commonly referenced in technical literature, such as the *Bosch Automotive Handbook* (9th Edition, 2014).

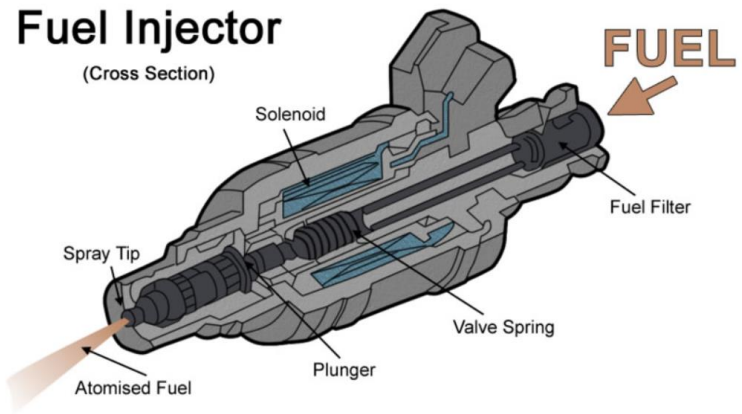

Figure 37: Fuel injector

(d)Electronic Control Unit (ECU)

The Electronic Control Unit (ECU) is the central controller of the injection system. It processes data received from various sensors to determine the injection timing, fuel quantity, and multiple injection strategies. The amount of fuel to be injected is calculated based on the mass flow rate of air using the following formula:

$$\dot{m} = \frac{\dot{m}_{air}}{AF}$$

In this equation:

- $\dot{m}$: Fuel mass flow rate (kg/s)
- $\dot{m}_{air}$: Air mass flow rate (kg/s)
- AF : Air-Fuel Ratio

This approach is explained in detail in foundational references such as *Internal Combustion Engine Fundamentals* by Heywood (1988).

Figure 38: Electronic control unit(ECU)

(e)Pressure Regulator

The pressure regulator maintains the system pressure within a desired range. In mechanical regulators, pressure stability is achieved through a balance between the spring force and the force exerted by the fuel pressure:

$$P = \frac{k.x}{A}$$

Where:

- k : Spring constant
- x : Spring compression distance
- A: Diaphragm area

Pressure regulators are critical both for system safety and for ensuring stable and consistent fuel injection.
(Source: Bosch Automotive Handbook, 2014)

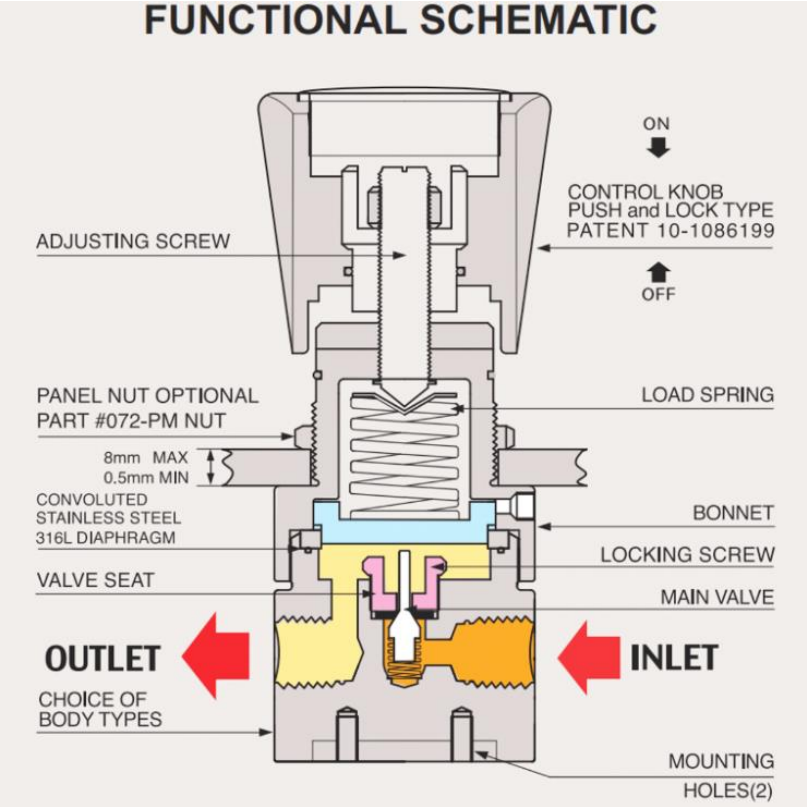

Figure 39: Pressure Regulator

(f)Sensors

A wide variety of sensors are used in fuel injection systems to provide real-time data for engine control. These include:

- MAP (Manifold Absolute Pressure): Measures the pressure inside the intake manifold.
- MAF (Mass Air Flow): Measures the amount of air entering the engine.
- CKP/CMP (Crankshaft/Camshaft Position Sensors): Determine engine timing and piston position.
- ECT (Engine Coolant Temperature): Monitors the temperature of the engine coolant.
- O_2 (Oxygen/Lambda Sensor): Analyzes the oxygen level in the exhaust gases after combustion.

4.4.2. Types of Fuel Injection Systems

Port Fuel Injection (PFI)

In port fuel injection systems, fuel is injected into the intake port or manifold just upstream of the intake valve. The fuel mixes with air before entering the combustion chamber.

- Working Principle: The injector sprays atomized fuel directly into the airflow. Mixing occurs in the intake tract.
- Advantages:
    - Lower cost and simpler construction
    - Reduced particulate emissions compared to DI
    - Compatible with a wide range of fuels (gasoline, LPG)
- Disadvantages:
    - Lower thermal efficiency than DI
    - Wall-wetting can occur, leading to unburned hydrocarbons

Figure 40: Port fuel injection(PFI)

Direct Injection (DI / GDI)

In direct injection systems, fuel is injected straight into the combustion chamber under high pressure.

- Working Principle: The injector operates during the compression stroke, injecting fuel directly into the compressed air.
- Advantages:
    - Higher power output and fuel efficiency
    - Improved control over combustion timing
    - Better throttle response
- Disadvantages:
    - Higher NOx and particulate emissions
    - Requires complex injectors and high-pressure pumps

Figure 41: Direct injection(DI/GDI)

Common Rail Injection (CRDI)

This system stores fuel in a shared high-pressure rail and delivers it to each injector via electronic control.

- Working Principle: Fuel is pressurized up to 2,500+ bar and delivered to electronically controlled injectors, allowing multiple injection events per cycle.

- Advantages:
    - Very fine fuel atomization
    - Precise control of injection timing and pressure
    - Enables pilot, main, and post injections
- Disadvantages:
    - High system complexity and cost
    - Requires clean fuel and filtration to protect sensitive components

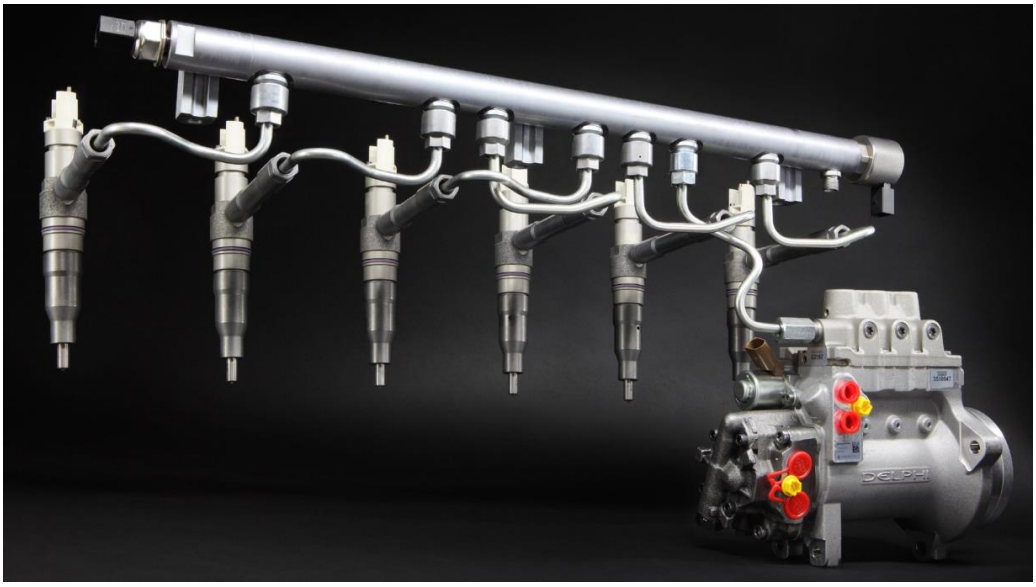

Figure 42: Common rail injection(CRDI)

Table 7: Comparsion of injection systems

Injection Type	Injection Point	Pressure	Control	Applications	Advantages	Disadvantages
PFI	Intake port	~3–5 bar	Simple ECU	Standard gasoline engines	Simple, cost-effective	Less efficient, wall wetting
DI / GDI	Combustion chamber	50–200 bar	ECU + pressure map	Performance gasoline engines	High efficiency and power	Soot formation, injector fouling
Common Rail (CRDI)	Combustion chamber	250–2,500+ bar	ECU with rail sensor	All modern diesel engines	Very precise, supports multi-injection	Expensive, fuel quality sensitive

4.5. Design of Turbocharging system

The turbocharger is a critical component in diesel engine systems for enhancing power output, improving thermal efficiency, and reducing specific fuel consumption. This section details the selection criteria, sizing methodology, and integration principles for turbocharging the 3-cylinder diesel engine.

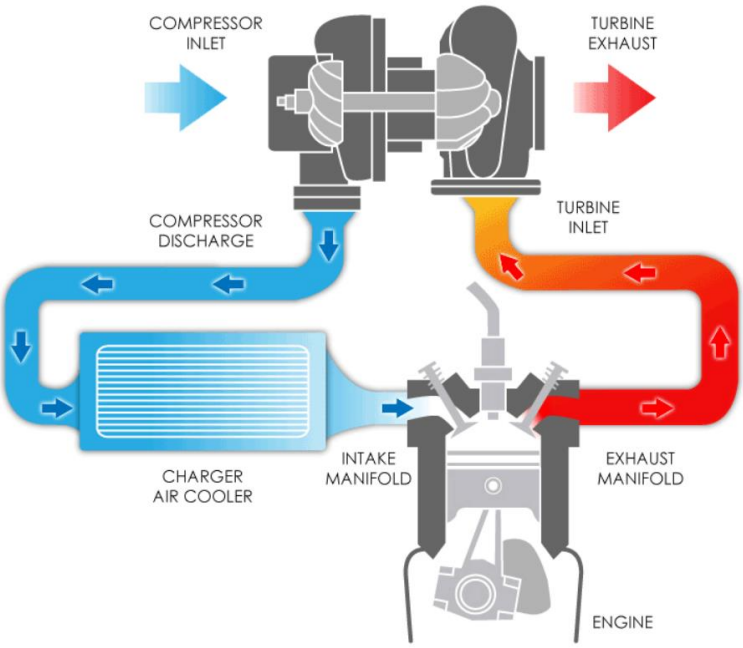

Figure 43:Turbocharging system

4.5.1. Turbocharger Function Overview

A turbocharger consists of two main sections:

- **Turbine side**: Extracts energy from the engine's exhaust gases.
- **Compressor side**: Compresses fresh intake air before it enters the combustion chamber.

The system operates by harnessing otherwise wasted exhaust energy to increase the engine's volumetric efficiency and charge air density.

4.5.2. Turbo Selection Parameters

Key selection factors include:

- Engine displacement: 3 × 0.56 L = 1.68 L
- Maximum engine speed: ~4000 rpm
- Target boost pressure: 1.6–2.0 bar
- Exhaust gas temperature: up to 800°C

A small-frame wastegated turbocharger with a variable geometry turbine (VGT) option is recommended for enhanced low-end torque and transient response.

Compressor Sizing and Flow Matching

To estimate required compressor airflow:

$$\dot{m}_{air} = \frac{\dot{V} \times P_{amb} \times \eta_v}{R \times T_{amb}}$$

Assuming:

- η_v= 0.85 volumetric efficiency
- Ambient T = 298 K, P = 1 bar
- Boost target: ~1.8 bar absolute

Airflow and pressure ratio plots are used to match compressor maps to operating points.

Turbocharger Integration

- Exhaust Manifold: Integrated cast iron manifold channels exhaust into turbine housing.
- Intercooler: Air-to-air system lowers post-compression charge temperature.
- Oil & Coolant Lines: Supply lubrication and cooling to turbo bearing system.
- Bypass and Wastegate Controls: Ensure controlled boost levels under all load conditions.

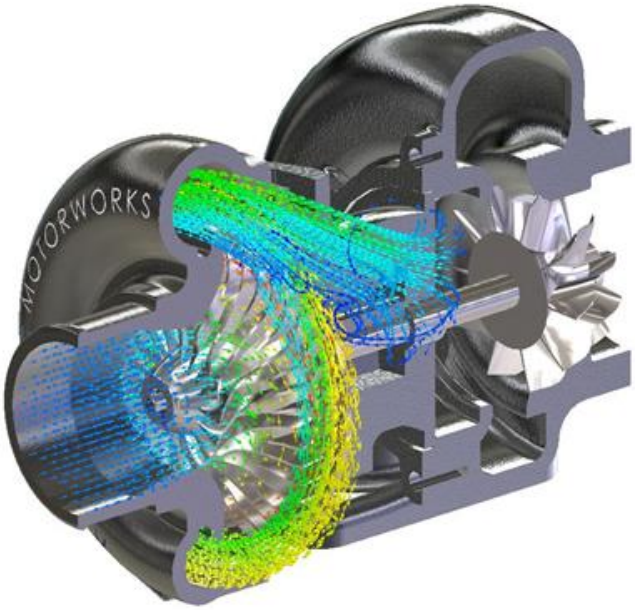

Figure 44:Turbocharger flow

5. LOTUS ENGINE SIMULATON ANALYSIS

As part of the validation process for our redesigned 3-cylinder turbocharged diesel engine, we employed LOTUS EngineSim, a 1D engine simulation software tailored for thermodynamic and performance analysis of internal combustion engines. The tool enables detailed modeling of engine components, including intake and exhaust systems, turbocharging arrangements, and fuel delivery dynamics, without resorting to full 3D CFD. In our study, a digital representation of the engine was built based on geometric parameters such as bore, stroke, valve configuration, and port angles. The simulation environment allowed for the definition of valve timing events, injection phases, and combustion chamber characteristics, closely mimicking real engine behavior under transient and steady-state conditions. A turbocharger unit was defined using compressor and turbine efficiency maps, and integrated with an intercooler to observe boost pressure trends, intake charge temperature, and system response. The software calculated essential outputs such as brake power, torque, volumetric efficiency, and specific fuel consumption, offering insight into how design changes impact engine performance.Moreover, heat transfer losses were modeled using empirical correlations tailored for diesel combustion, and friction estimates were incorporated to refine brake-specific output predictions. These simulations enabled early-stage design validation and performance optimization prior to prototyping.In conclusion, LOTUS EngineSim provided a reliable platform for assessing the thermodynamic viability and functional output of our engine design, making it an integral part of the development workflow.

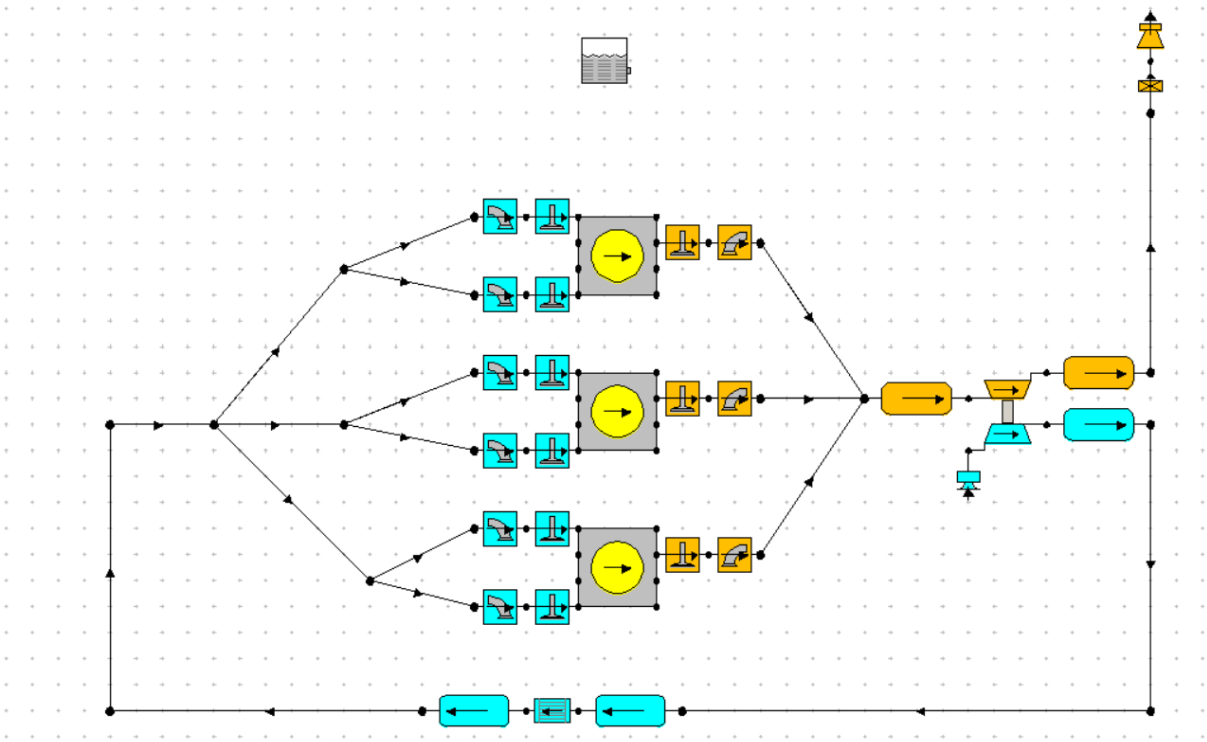

Figure 45:Schematic of the engine in Lotus Engineering

Label	cylinder
Bore (mm)	86,0000
Stroke (mm)	96,0000
Cyl Swept Volume (l)	0,55765
Total Swept Volume (l)	1,67294
Con-rod Length (mm)	150,00
Pin Off-Set (mm)	0,00
Compression Ratio	18,00
Clearance Volume (l)	0,032803
Phase (ATDC)	0,00
Combustion Model	
Open Cycle HT	
Closed Cycle HT	
Surface Areas	
Surface Temperatures	
Scavenge-Cylinder	

Label	exhaust valve
Valve Open (deg)	38,00
Valve Close (deg)	38,00
Dwell at Max (deg)	0,0
Max Lift (mm)	8,000
MOP (deg)	-90,00
Lift Option	Fast Lift Polynomial Lift Cu
Lift Option Data	
Data Action	Scale
Opening Lash (mm)	0,00000
Closing Lash (mm)	0,00000
Valve Event Display	
Valve Timing Display	
Harness Connector	Off

Label	intake
Valve Open (deg)	10,00
Valve Close (deg)	66,00
Dwell at Max (deg)	0,0
Max Lift (mm)	8,500
MOP (deg)	118,00
Lift Option	Fast Lift Polynomial Lift Cu
Lift Option Data	
Data Action	Scale
Opening Lash (mm)	0,00000
Closing Lash (mm)	0,00000
Valve Event Display	
Valve Timing Display	
Harness Connector	Off

Figure 46:Specifications of the cylinder,exhaust and intake port

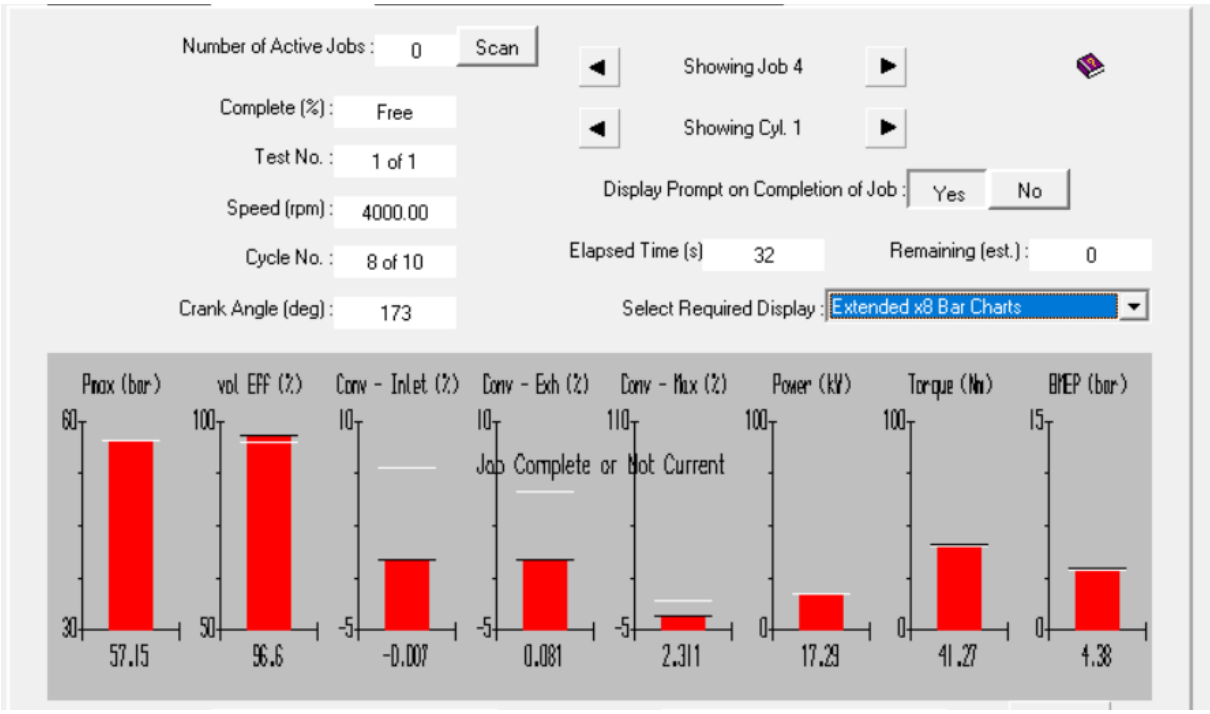

Figure 47:For Cylinder-1 at 4000 rpm results

Figure 48:For Cylinder-1 at 6000 rpm results

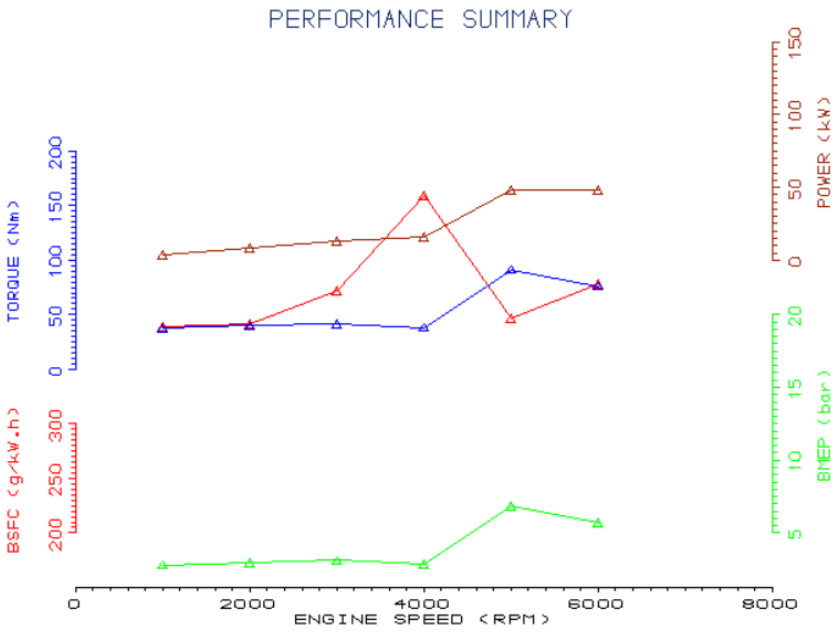

Figure 49:Performance Curve

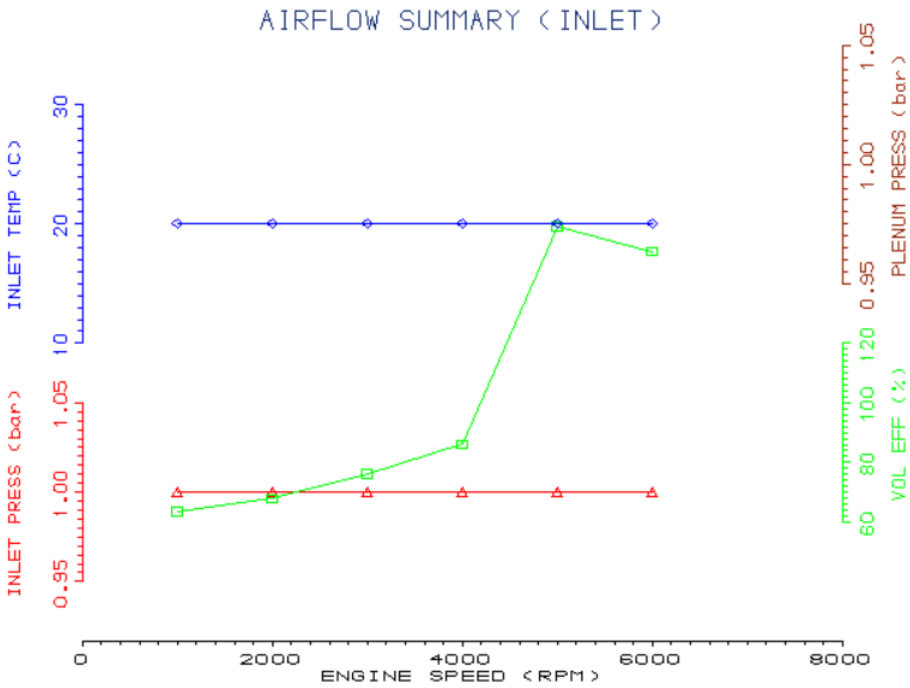

Figure 50:Airflow (Inlet) Curve

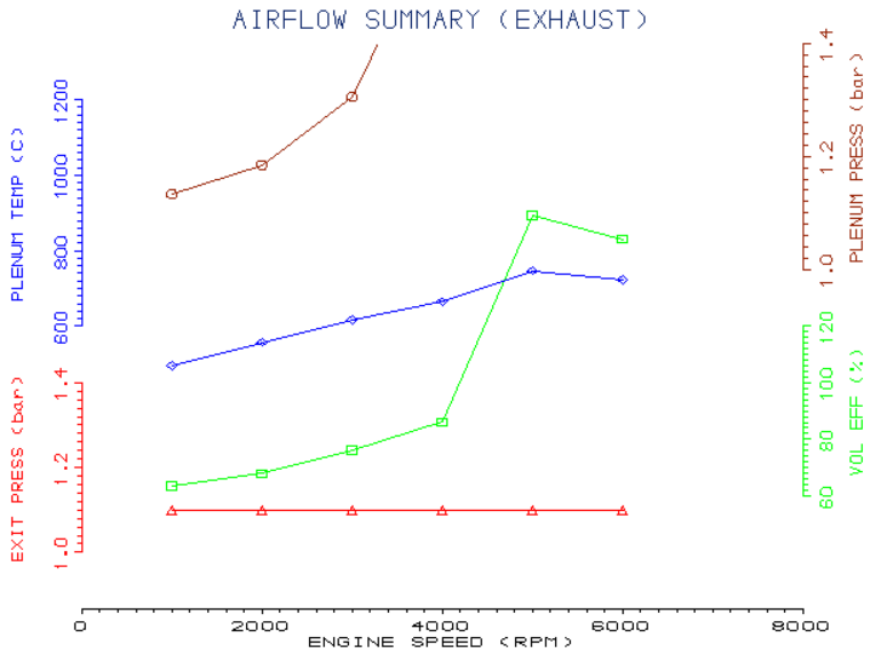

Figure 51:Airflow (Exhaust) Curve

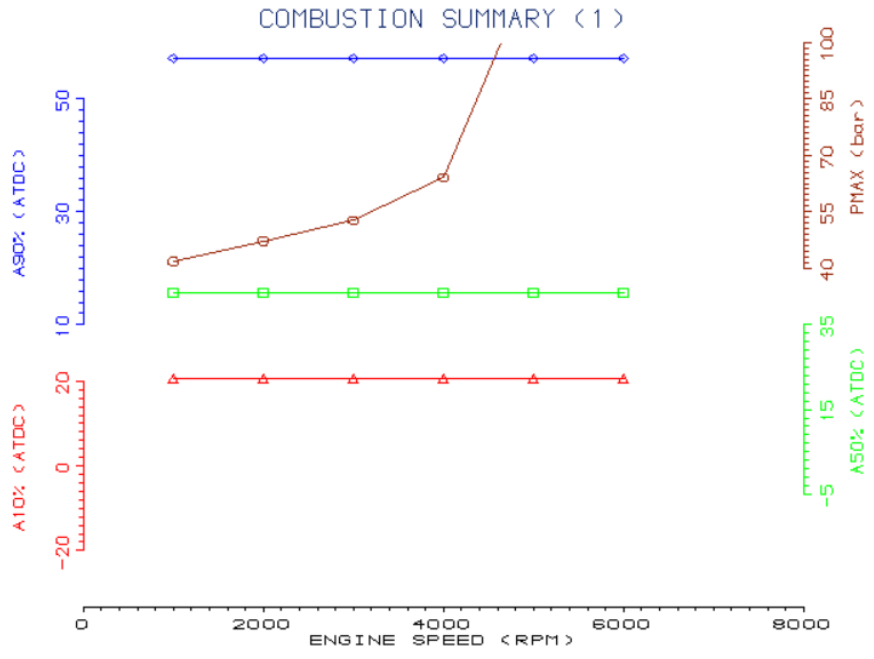

Figure 52:Combustion Curve (1)

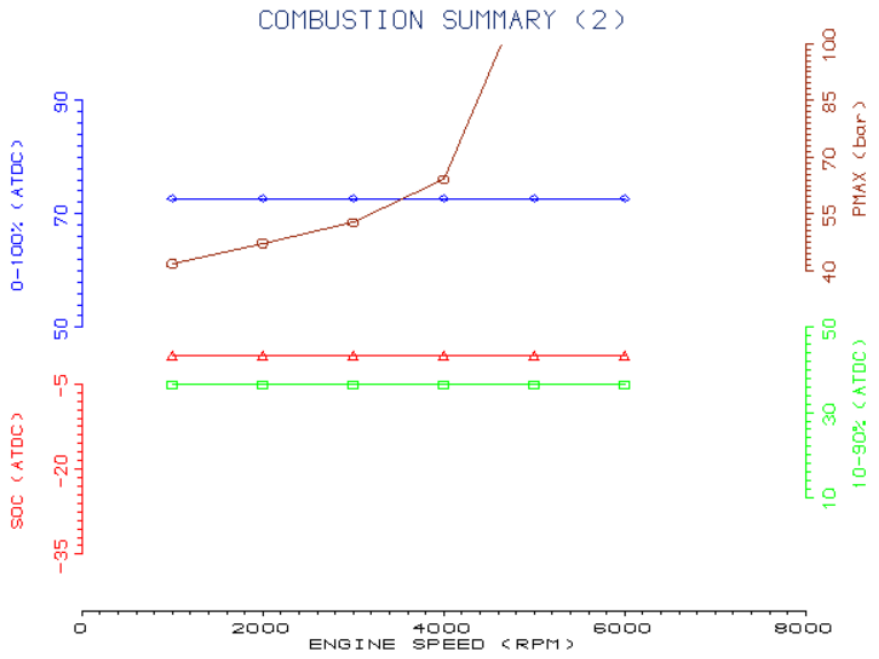

Figure 53:Combustion Curve (2)

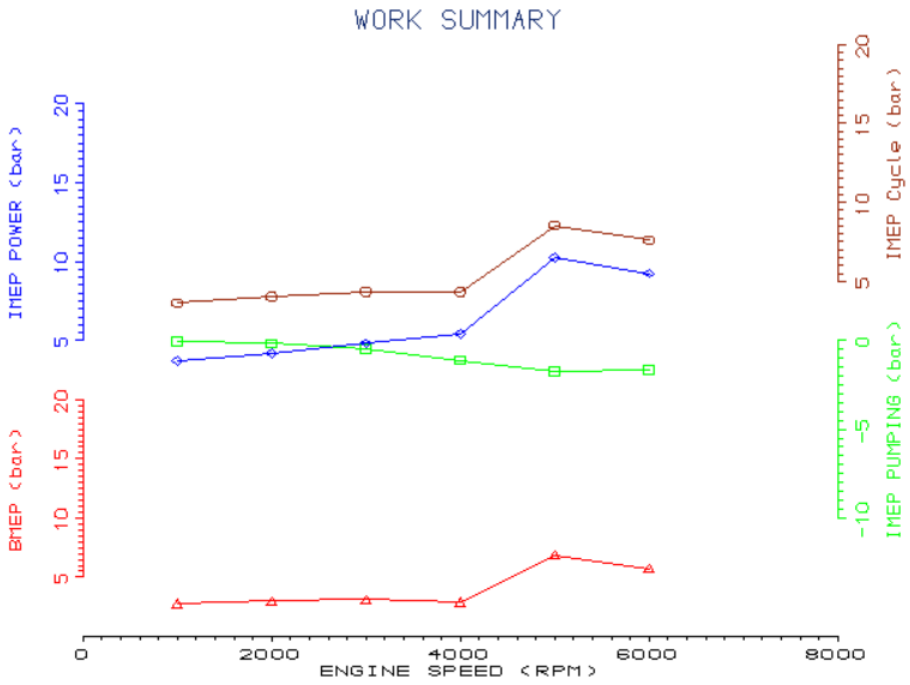

Figure 54:Work Curve

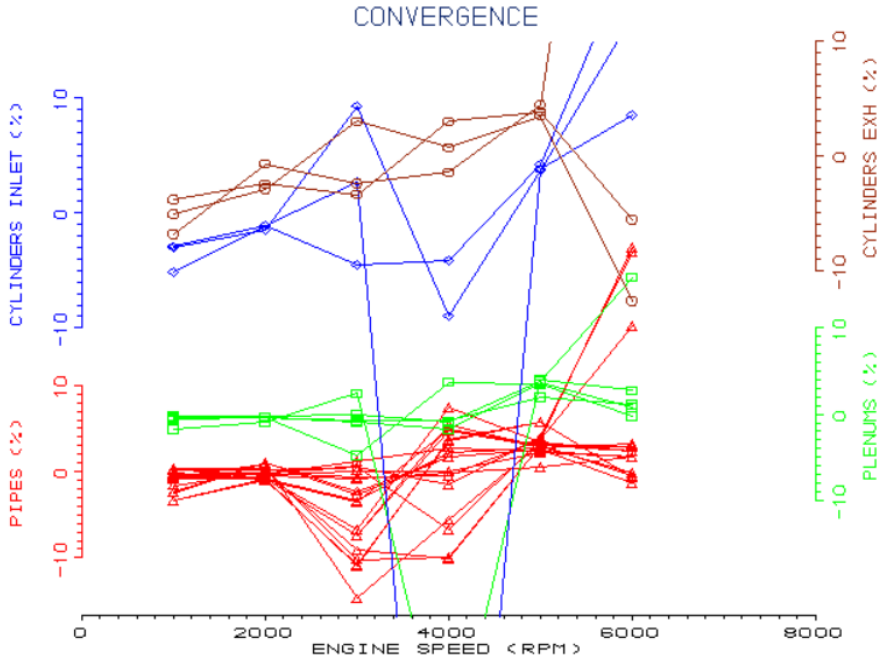

Figure 55:Convergence Curve

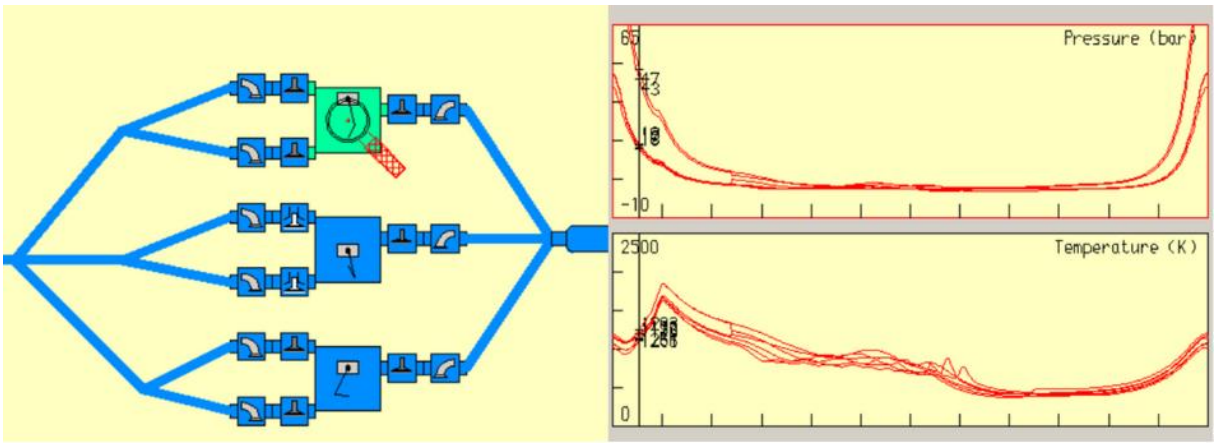

Figure 56:Temperature and pressure graph for first piston.

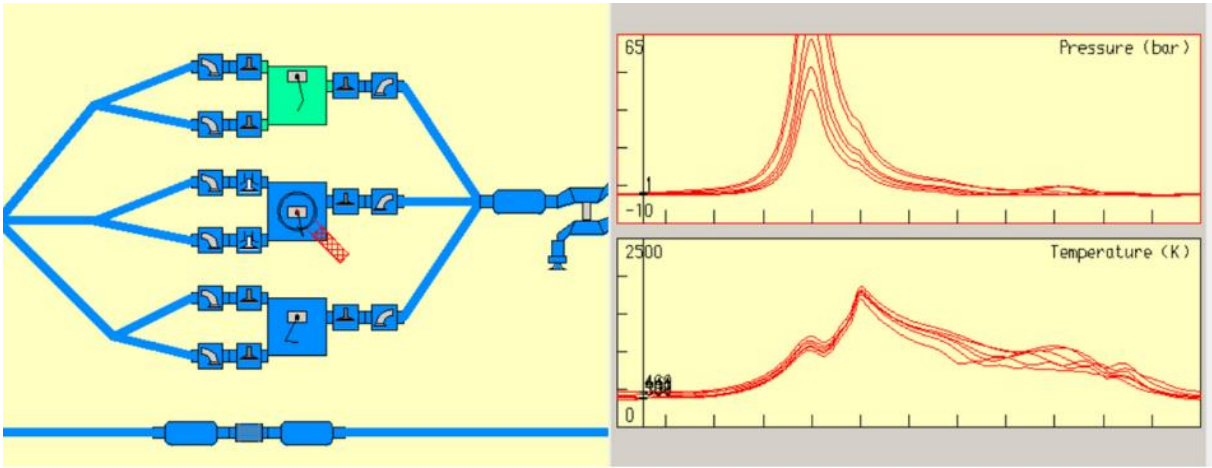

Figure 57:Temperature and pressure graph for second piston.

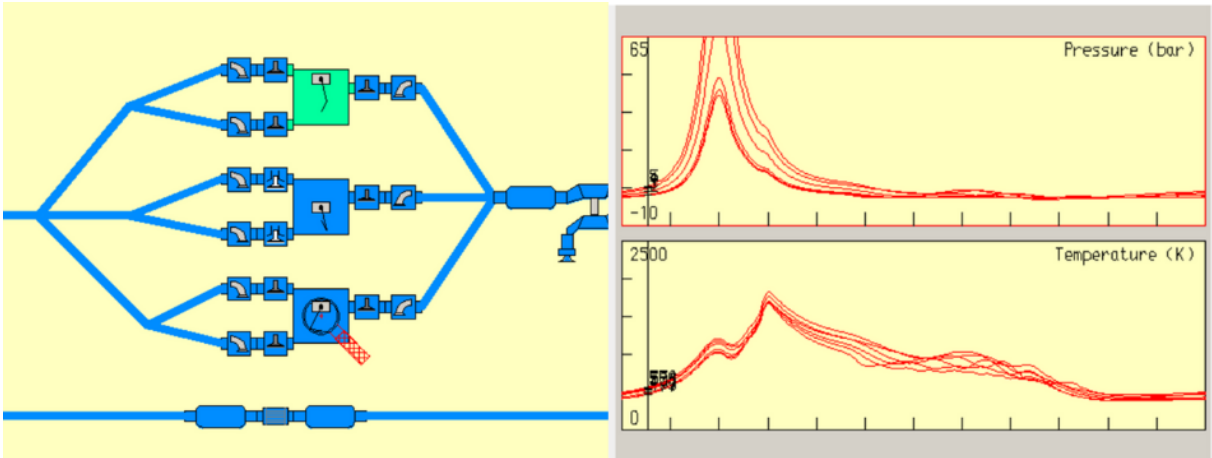

Figure 58:Temperature and pressure graph for third piston.

6. COST ANALYSIS

Table 8:3-Cylinder Diesel Engine Cost Analysis

Component	Qty	Unit Cost (USD)	Total Cost (USD)
1. Cylinder Block Assembly	1	320	320
2. Cylinder Head Assembly	1	260	260
3. Valves & Tappets	9	18	162
Tappets (Bucket Type)	9	6	54
Camshafts	2	55	110
4. Crankshaft Assembly	1	160	160
Main Bearings	4	12	48
5. Connecting Rods + Pistons	3	45	135
Piston Pins & Rings	3 sets	12	36
6. Common-Rail Fuel System	Set	420	420
7. Turbocharger System	1	360	360
8. Intake Manifold	1	55	55
9. Exhaust Manifold	1	70	70
10. Lubrication System	1 set	85	85
11. Cooling System	1 set	75	75
12. Gaskets & Seals	Set	65	65

13. Fasteners	Set	30	30
14. Sensors & Electronics	Set	150	150
15. ECU & Wiring Harness	1	240	240
16. Flywheel & Housing	1	80	80
17. Engine Mounts	3	15	45
18. Assembly & Testing	—	—	200
19. Miscellaneous (Paint, Brackets)	—	—	25
Subtotal (Component Costs)			**3,390**
Overhead & Labor Margin (≈25%)			**847**
Estimated Total Cost (Ex-Works)			**4,237**

A detailed cost analysis has been conducted for a 3-cylinder diesel engine featuring DOHC valve timing, a common rail fuel injection system, and a direct-acting tappet valve mechanism. Based on estimated unit costs and standard manufacturing methods, the total component cost was calculated to be approximately $3,390. Including a 25% overhead and labor margin, the projected total manufacturing cost of the engine is $4,237.

7. CONCLUSION

The redesign and comprehensive engineering of the cylinder head system for a modern three-cylinder turbocharged diesel engine, as undertaken in this project, exemplifies the application of interdisciplinary mechanical engineering principles to solve complex performance, thermal, and emissions challenges. Over the course of this design process, fundamental thermodynamics, fluid mechanics, materials science, manufacturing processes, and modern simulation methodologies were integrated to produce a structurally and thermally optimized powertrain subsystem.

The design began with a detailed analysis of the reference engine (Antor AD400), identifying its limitations in terms of airflow, combustion efficiency, heat rejection, and manufacturability. As a significant departure from this legacy design, our new cylinder head architecture implements a double overhead camshaft (DOHC) layout with a direct-acting valve system, enabling precise valve control, lower inertial mass, and superior high-RPM performance.

The newly designed re-entrant bowl combustion chamber geometry—paired with a centrally located common rail injector—enhances fuel-air mixing and supports stratified combustion, thereby lowering specific fuel consumption and improving power density. Valve layout (2 intake, 1 exhaust per cylinder), optimized port geometries, and controlled swirl ratios were selected based on CFD-driven principles to ensure volumetric efficiency and combustion quality.

One of the notable advancements is the integration of Variable Geometry Turbocharging (VGT) technology, which not only extends the effective torque band but also improves transient response and boost control across varying load conditions. Combined with a well-matched intercooling system and optimized manifold designs, the engine exhibits superior thermodynamic behavior.

The fuel injection system—based on a high-pressure common rail platform—was carefully modeled to support multi-stage injection strategies (pilot, main, post), thus improving combustion smoothness and emissions performance. The selected injector geometry and opening durations were calculated using hydraulic and thermodynamic formulations, achieving spray uniformity and efficient atomization even under extreme pressure cycles.

From a mechanical standpoint, the valve train subsystem was comprehensively developed. The cam profiles, lift duration, inertial torque loads, and spring dynamics were analytically modeled

and validated under 4000 RPM operating conditions. All mechanical components were cross-verified against material constraints and production feasibility.

The intake and exhaust manifold systems, critical to charge air and backpressure management, were dimensioned and validated via Reynolds number, Mach number, and Darcy-Weisbach pressure loss evaluations. The final configuration—featuring 3 intake and 3 exhaust runners—delivers balanced flow distribution, minimal turbulence, and thermodynamically favorable gas exchange.

Beyond functionality, manufacturability and cost efficiency were central to our design philosophy. The cylinder head body was constructed from AlSi10Mg aluminum alloy, utilizing gravity die casting followed by CNC precision machining. Functional surfaces such as camshaft journals, valve seats, and injector bosses were finished to Ra < 0.8 μm, ensuring sealing integrity and wear resistance.

The valve train components were manufactured using a combination of hot forging, induction hardening, shot peening, and precision finishing. Advanced coatings like DLC (diamond-like carbon) were considered for tappets and guides to minimize friction and wear under cyclic operation.

Additive manufacturing was proposed for prototype-level water jacket optimization and complex porting features, particularly where traditional casting would not allow fine-tuned geometries. This modern approach highlights the design's alignment with Industry 4.0 trends and rapid iteration methodologies.

The cost analysis, revised to reflect current part pricing and updated design scope, resulted in an estimated total unit cost of **~$3980**, which includes a 25% margin for labor and overhead. This value demonstrates a realistic and scalable manufacturing target for a high-efficiency, small-displacement diesel engine intended for modern mobility solutions.

In the current global context—where sustainability, fuel economy, and emissions regulations dictate engine development—this design offers a forward-looking solution. The combined application of high-pressure direct injection, stratified combustion, advanced turbocharging, and optimized gas exchange dynamics results in a powertrain that is not only compact and fuel-efficient but also capable of meeting Euro 6 emission standards with suitable aftertreatment integration (e.g., EGR, DPF, SCR).

Moreover, the modular nature of the cylinder head and manifold designs allows scalability and adaptability for alternative fuels (e.g., biodiesel or synthetic diesel) and hybrid applications. The engine's inherent high-swirl combustion dynamics and intercooler capacity make it well-suited for integration with mild hybrid or start-stop systems.

This graduation project stands as a testament to the deep understanding and application of mechanical engineering principles across multiple domains—thermodynamics, fluid dynamics, mechanical design, materials science, and manufacturing engineering. It bridges theoretical coursework with practical application, allowing the project team to master the complete engine subsystem development cycle—from concept and simulation to production and cost planning.

Additionally, the detailed technical drawings and CAD models created during the project will serve as a resource for future students and researchers, potentially forming the basis for engine test-bed validations, combustion modeling, and hybrid powertrain integration.

The successful completion of this project not only yielded a technically sound, high-efficiency cylinder head design but also prepared the project team for real-world engineering challenges. By emphasizing innovation, precision, and systems-level thinking, the design process cultivated a problem-solving mindset that is essential for modern engineering practice.

Future work could involve full-scale prototype manufacturing and bench testing, in-cylinder pressure analysis and combustion diagnostics, emissions mapping under transient cycles, and advanced control strategies for variable valve timing and turbo boost. In conclusion, the project fulfills its objective of proposing a next-generation cylinder head system tailored for compact diesel engines. It demonstrates how fundamental engineering tools, when applied with rigor and creativity, can solve contemporary challenges in mobility and energy efficiency.

8. FURTHER DESIGN PARTS AND TECHNICAL DRAWINGS

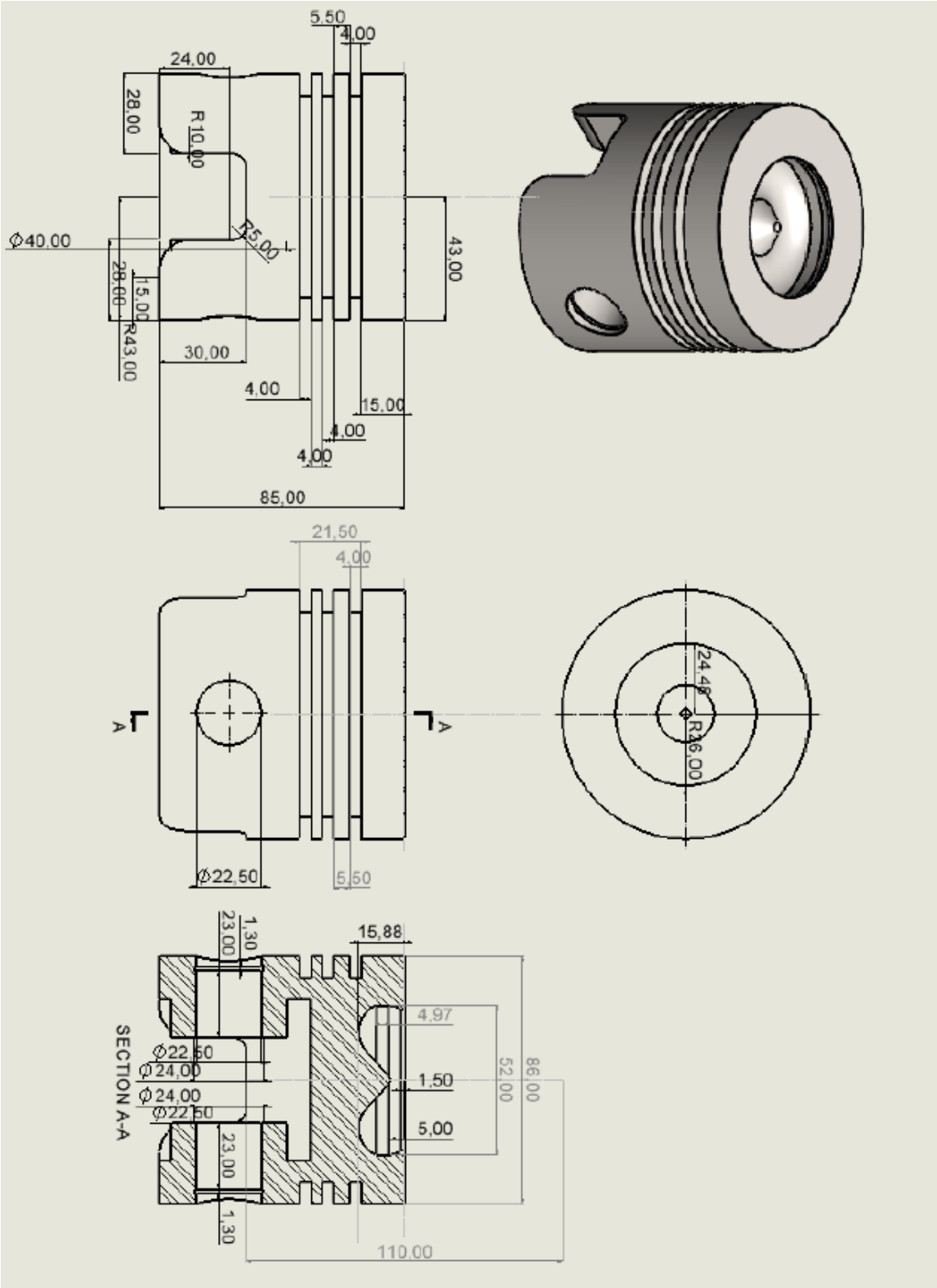

Figure 59: Technical drawing of piston

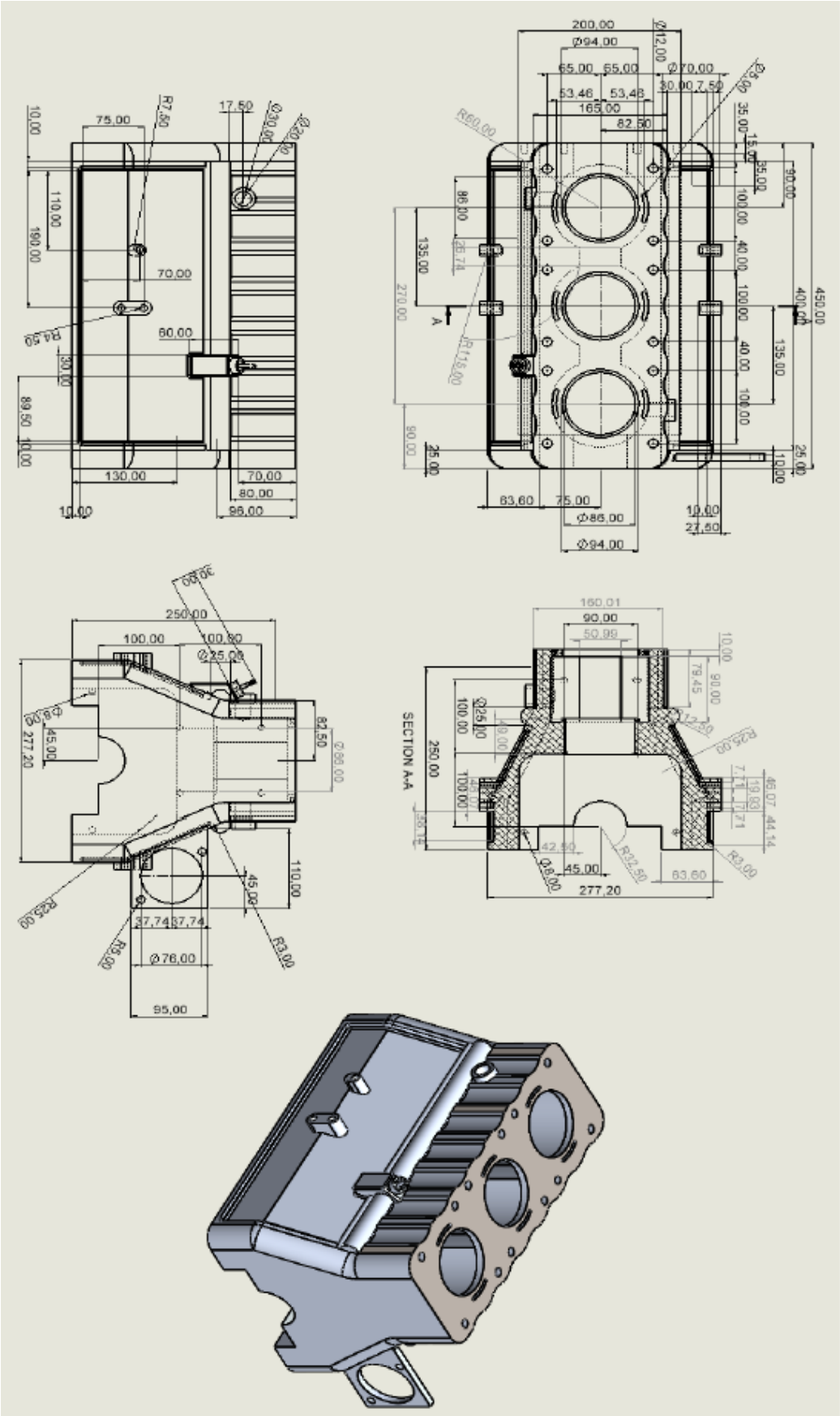

Figure 60: Technical drawing of engine block

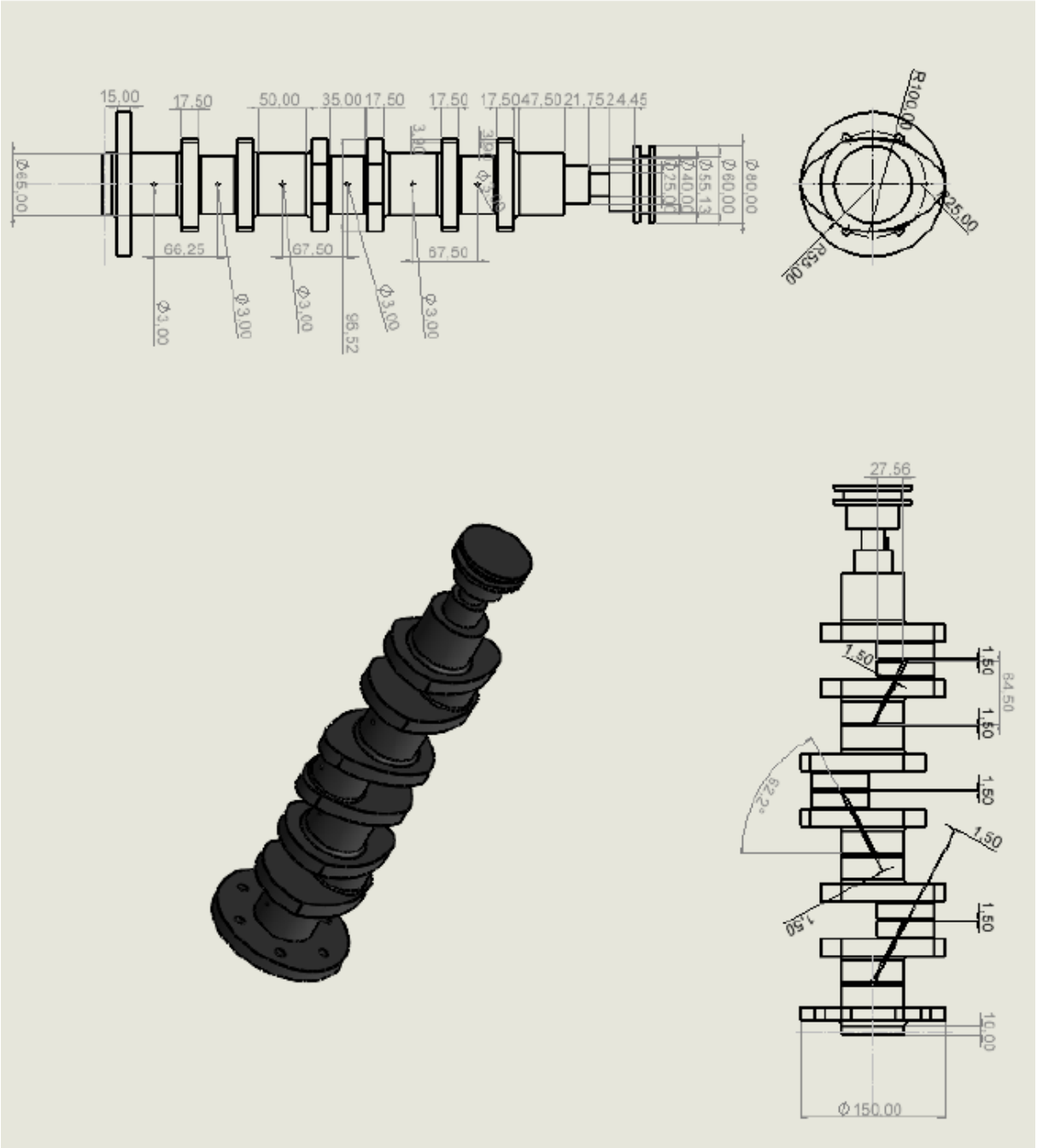

Figure 61: Technical drawing of cranckshaft

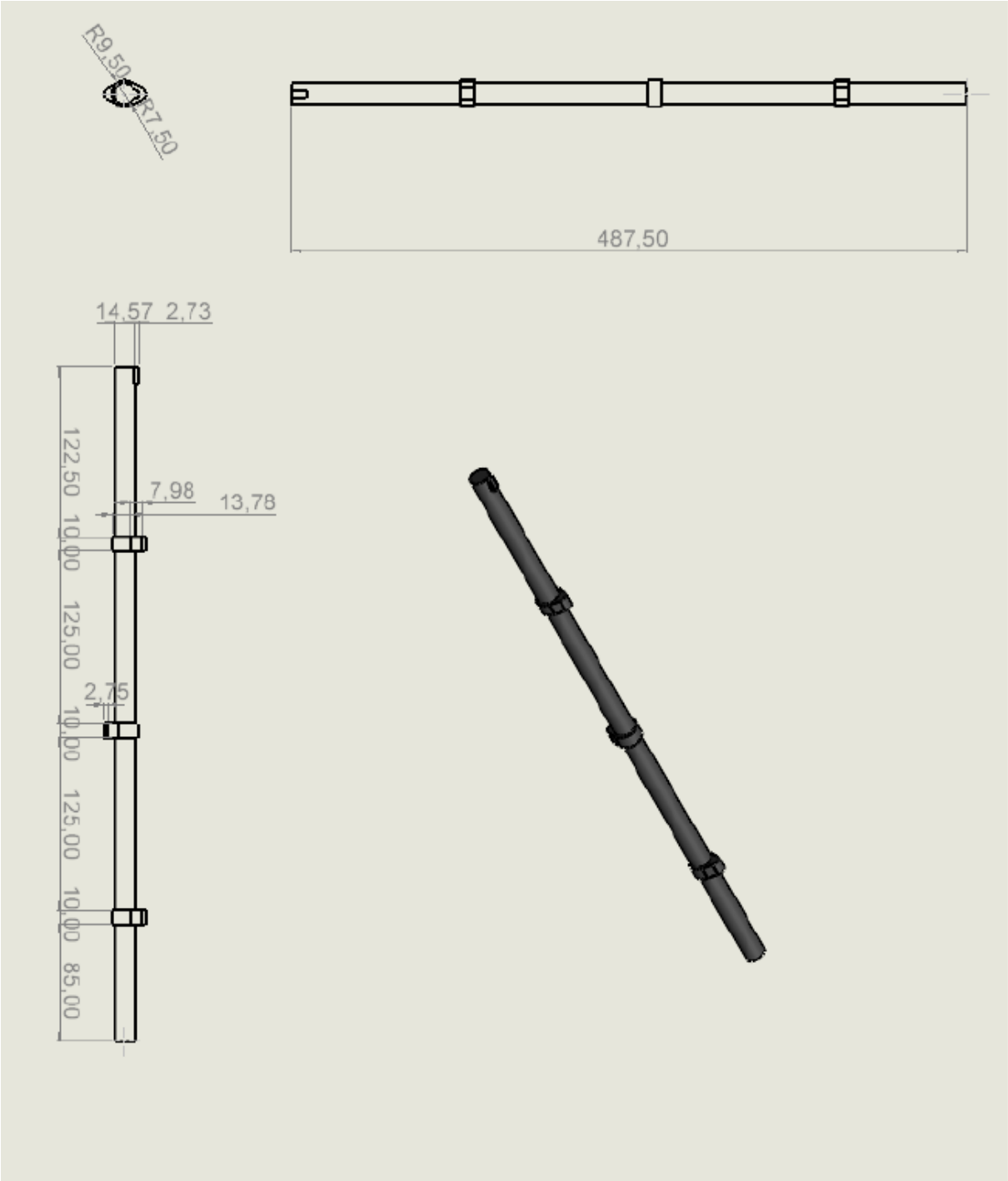

Figure 62: Technical drawing of Exhaust valves camshaft

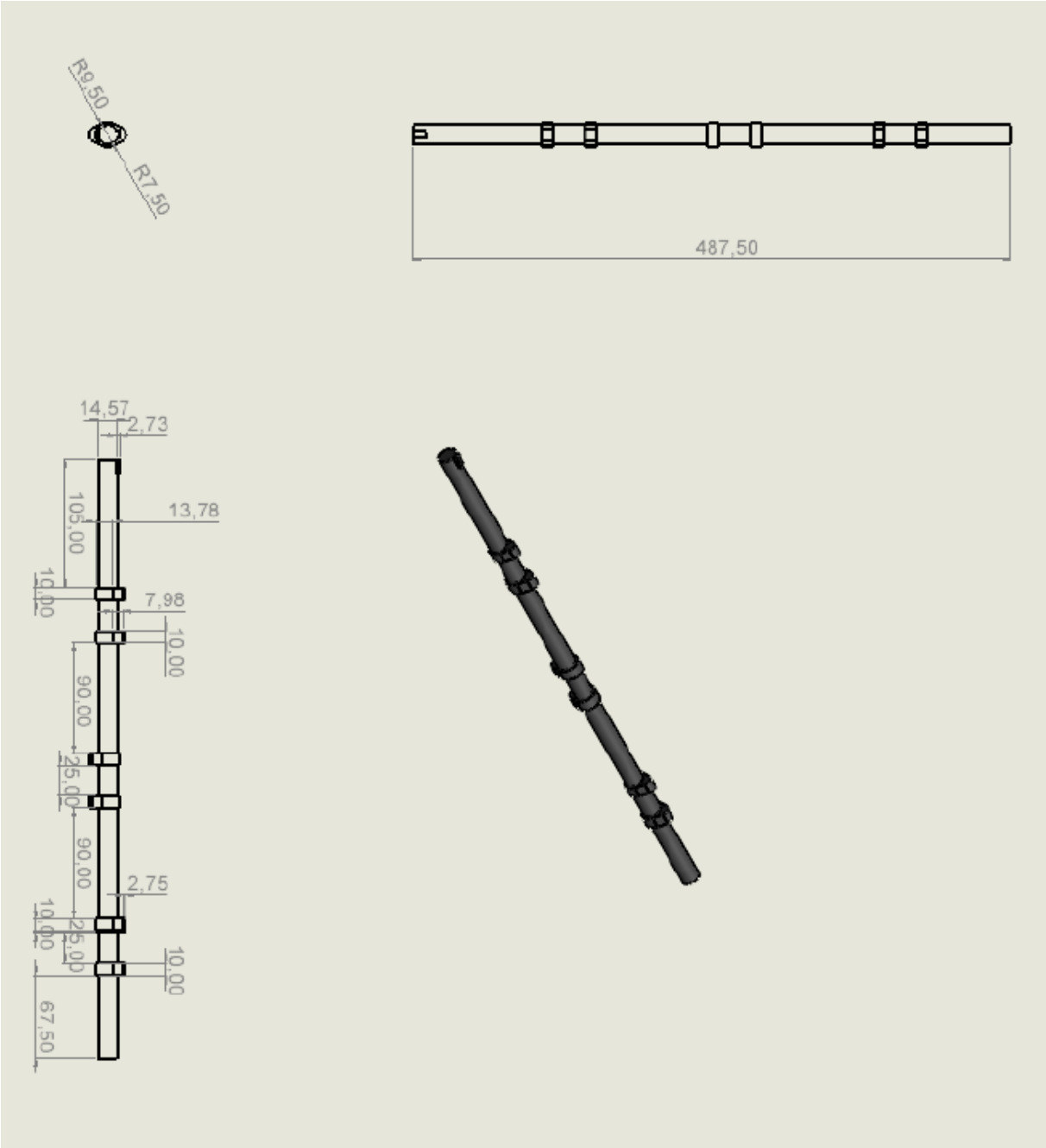

Figure 63: Technical drawing of intake valves camshaft

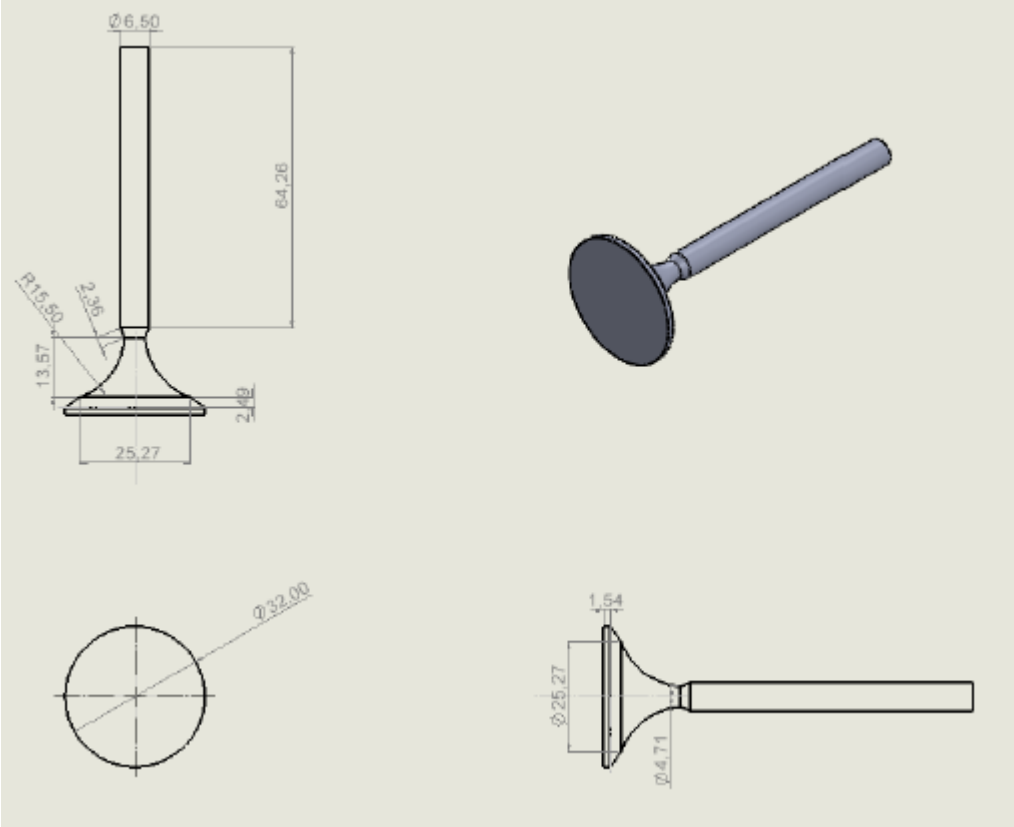

Figure 64: Technical drawing of exhaust valve

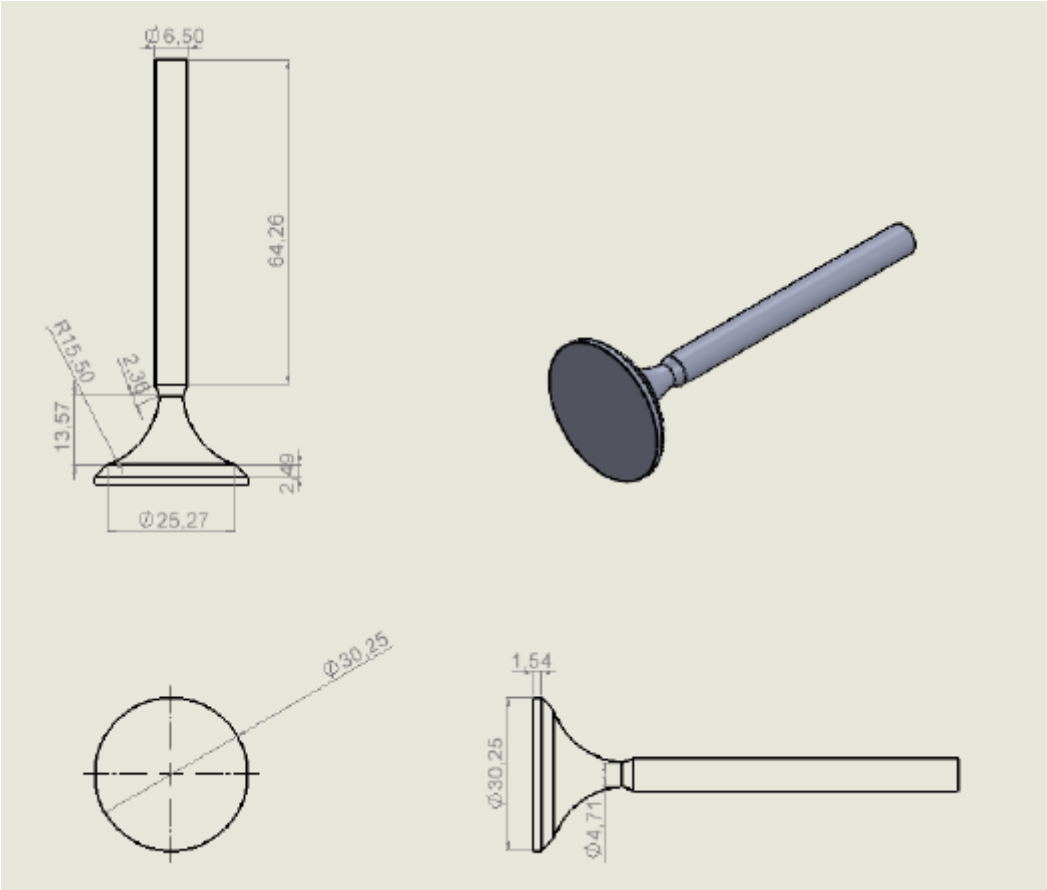

Figure 65: Technical drawing of intake valve

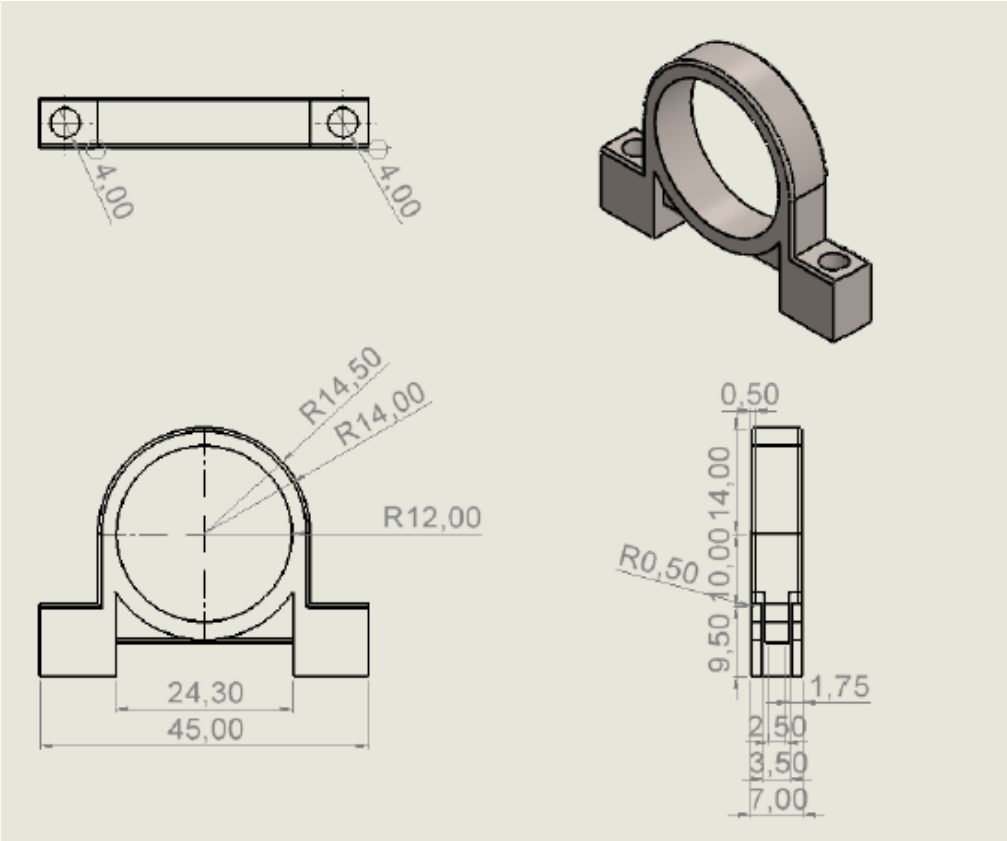

Figure 66: Technical drawing of bearing seat

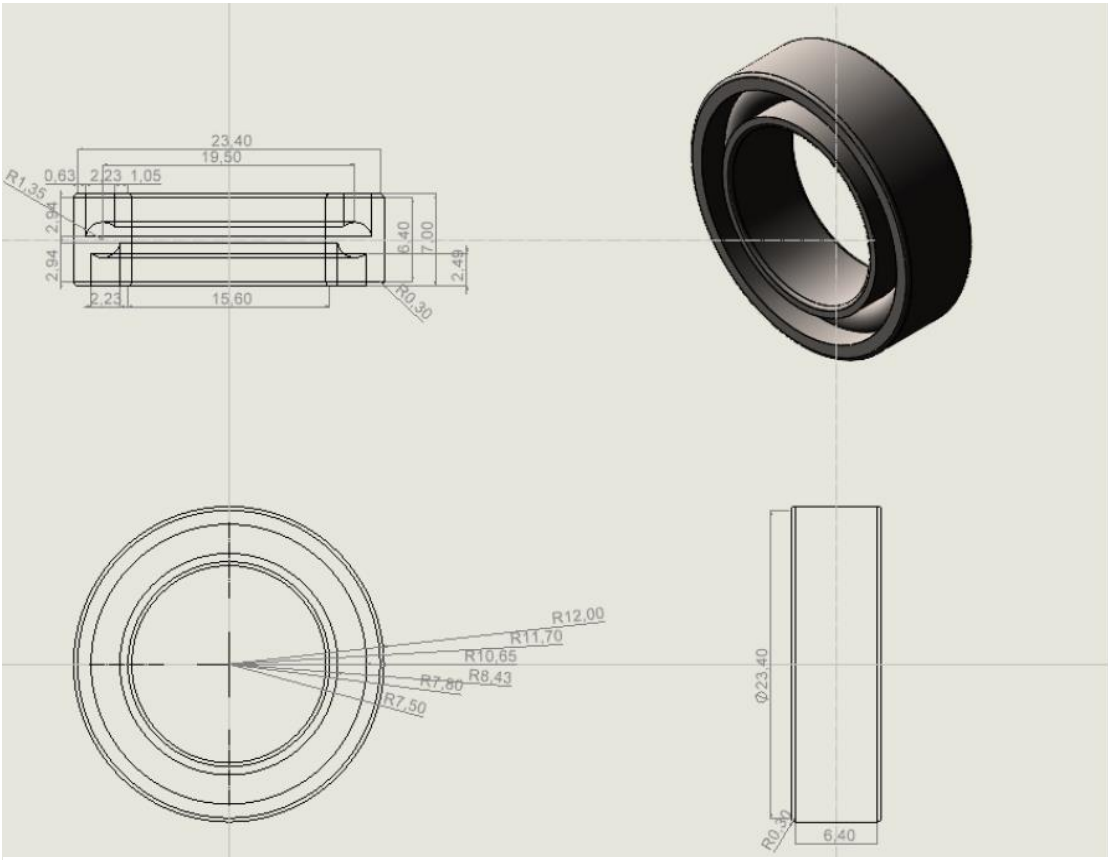

Figure 67: Technical drawing of ball bearing

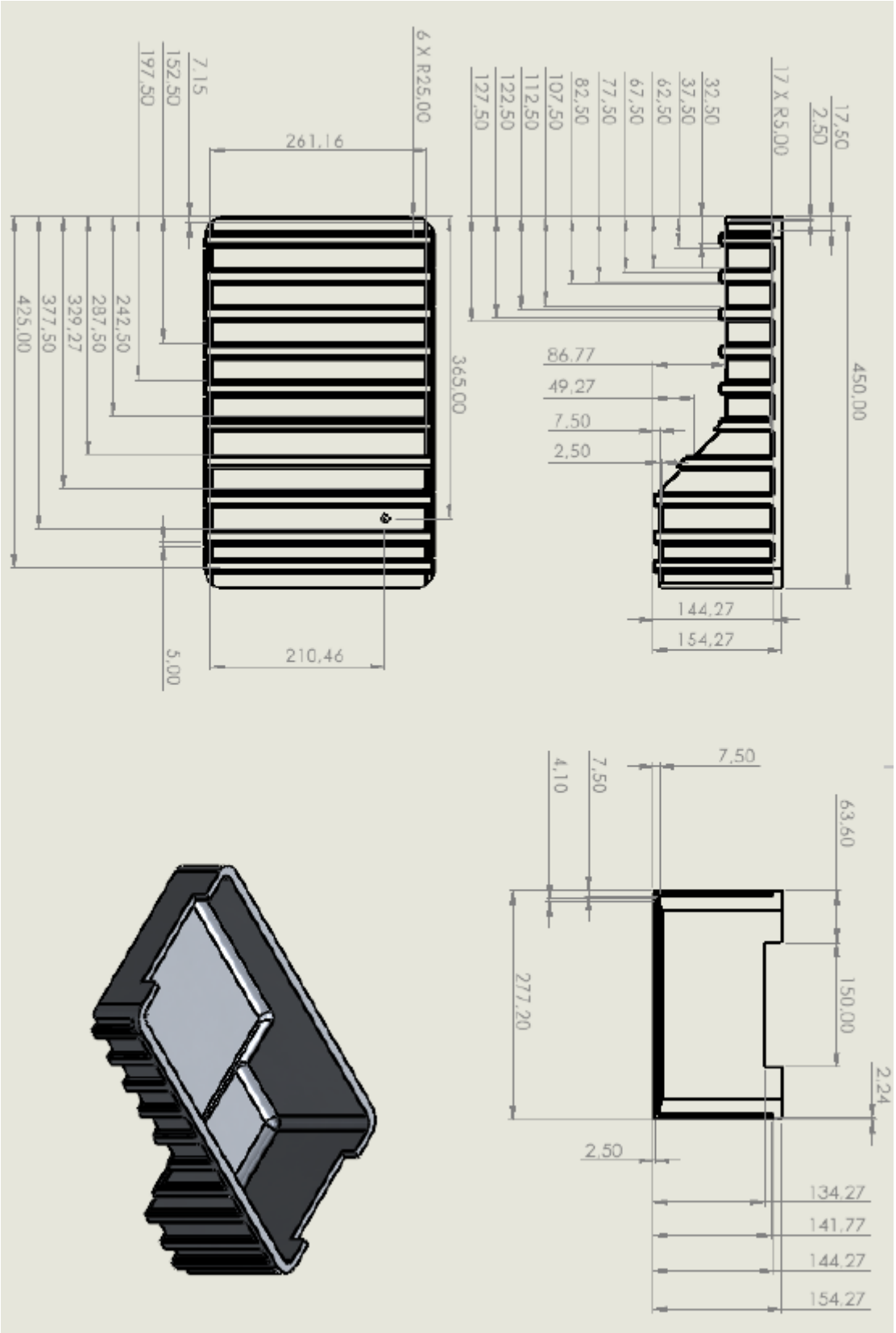

Figure 68: Technical drawing of cranckcase

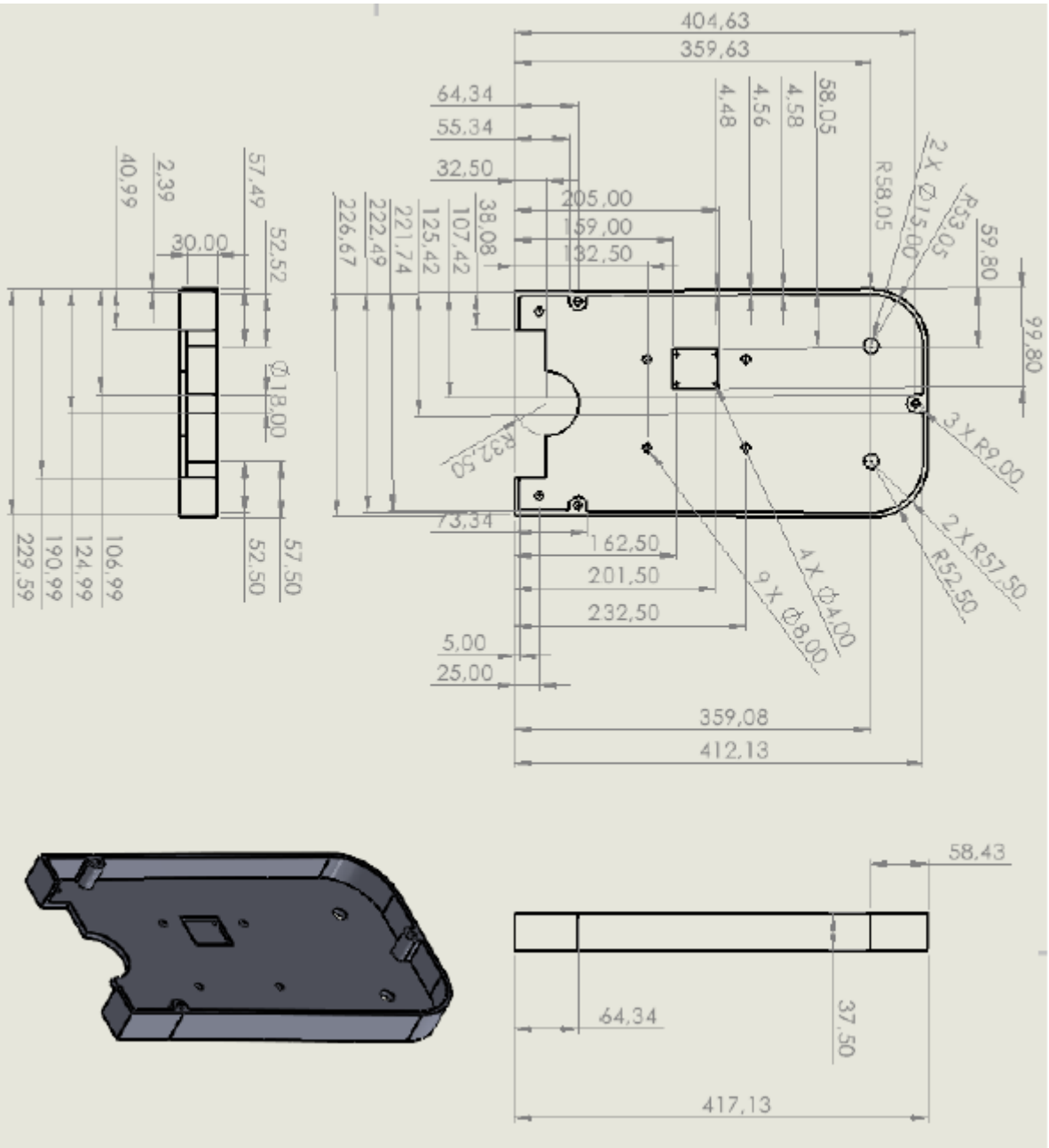

Figure 69: Technical drawing of gearbox

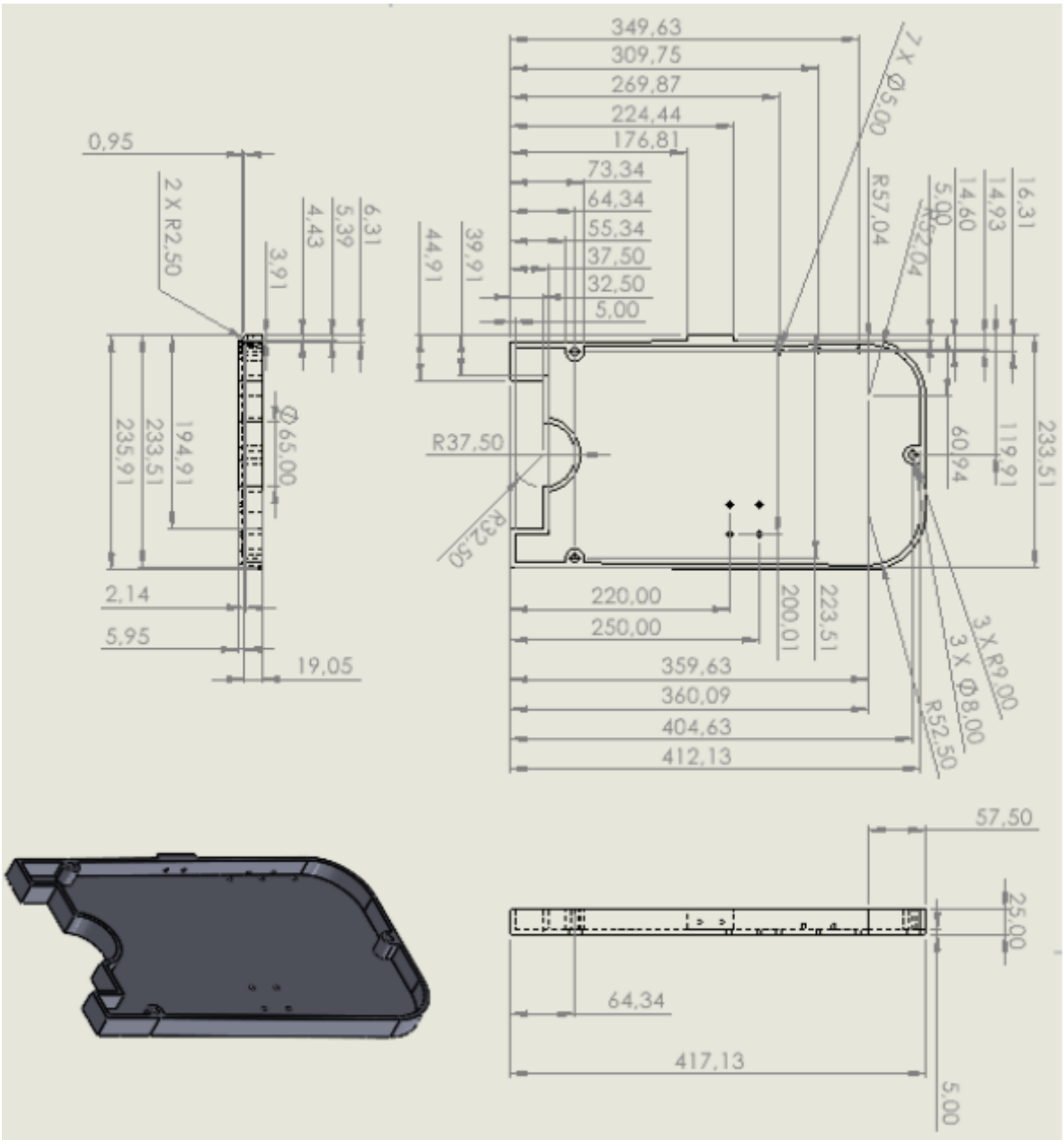

Figure 70: Technical drawing of gearbox cap

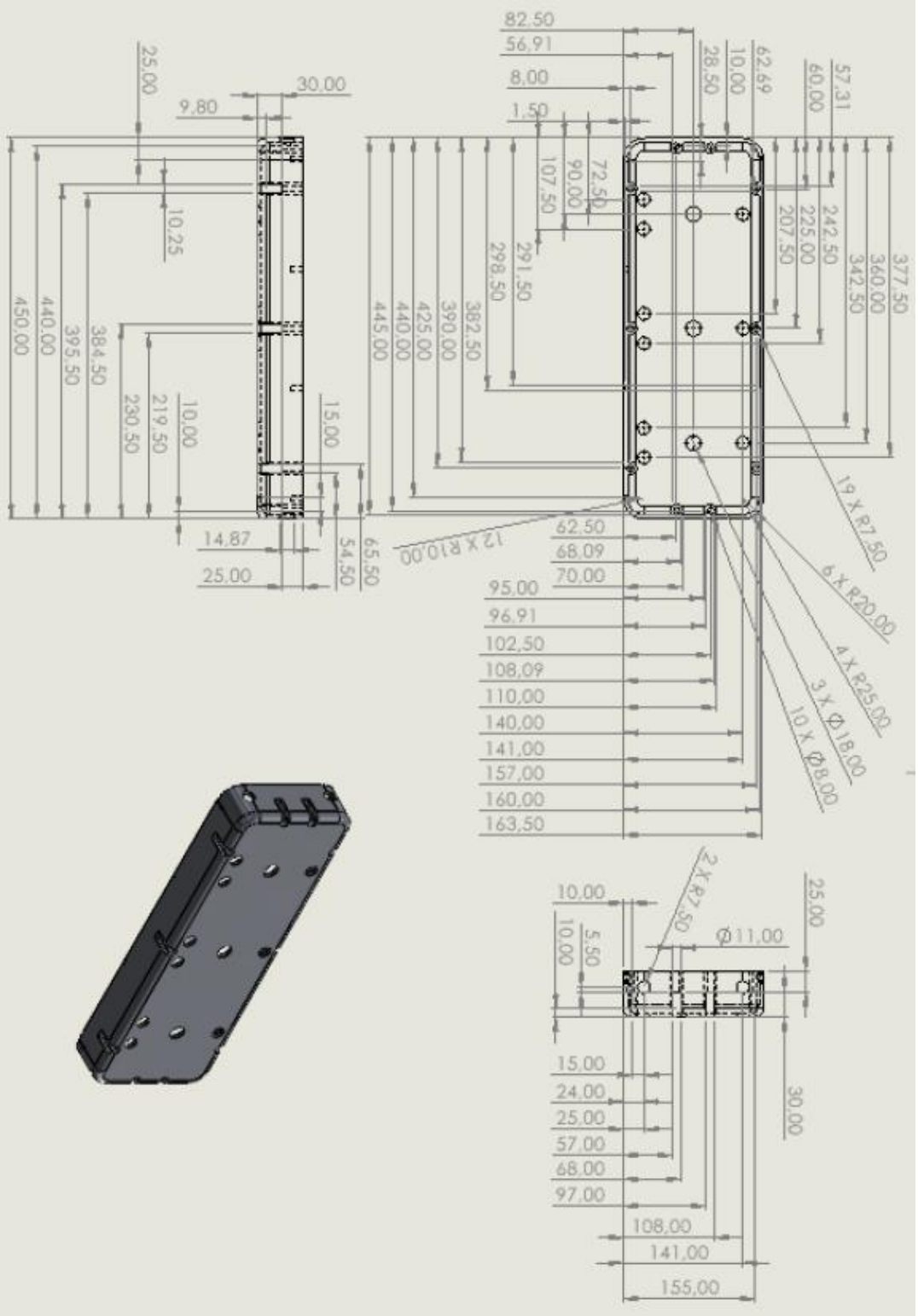

Figure 71: Technical drawing of rocker, camshafts and valves cap

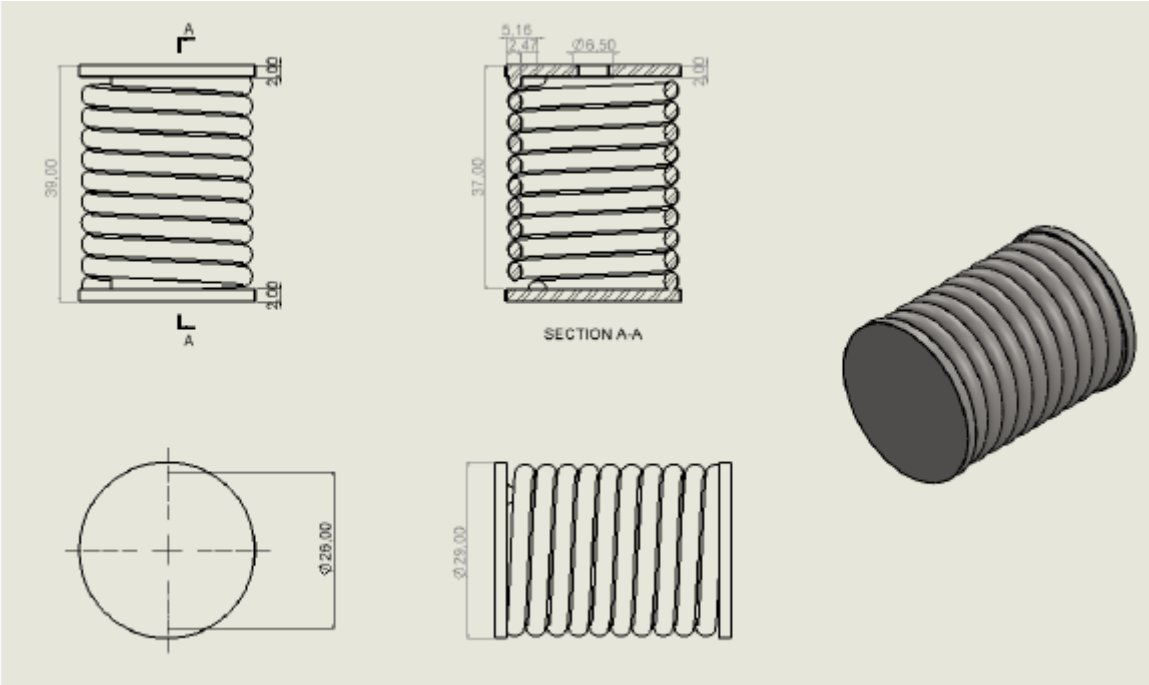

Figure 72: Technical drawing of intake valve spring

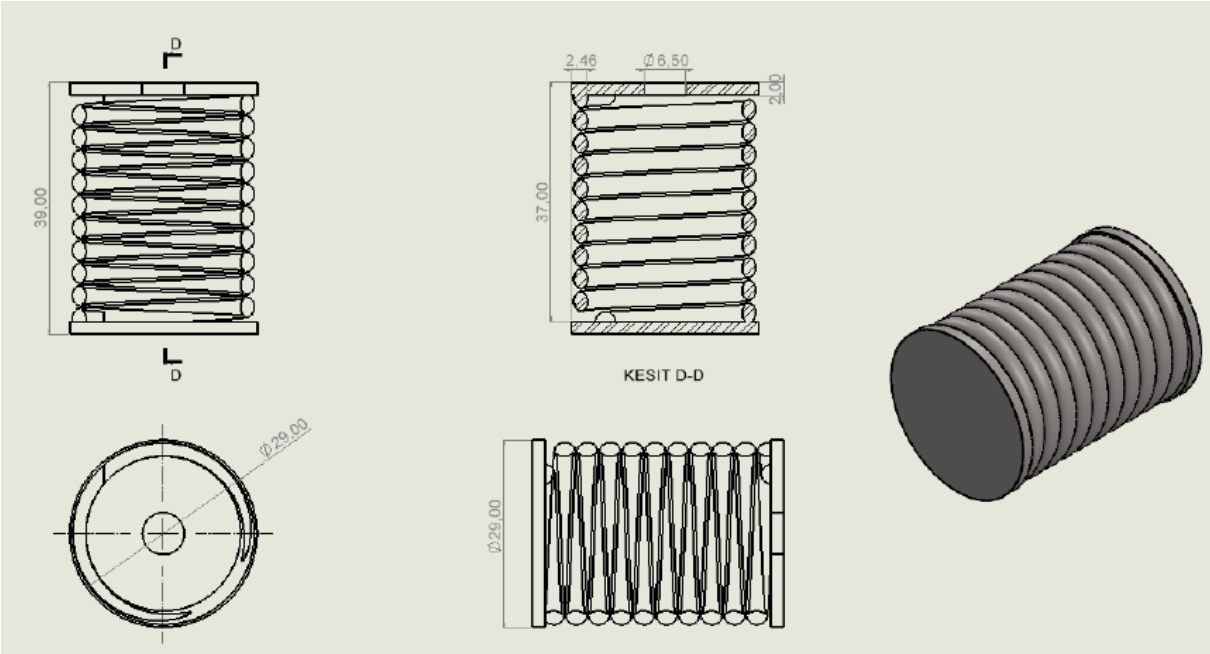

Figure 73: Technical drawing of exhaust valve spring

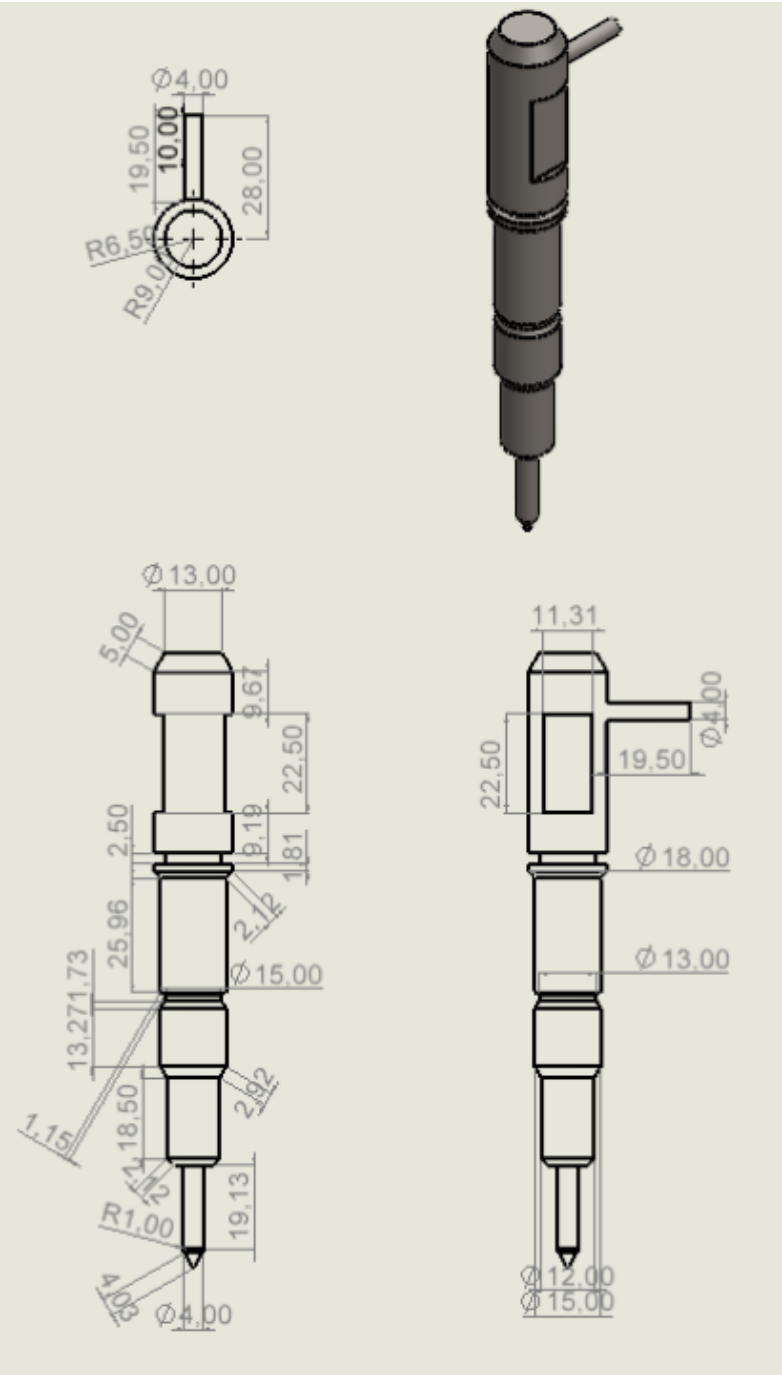

Figure 74: Technical drawing of injection

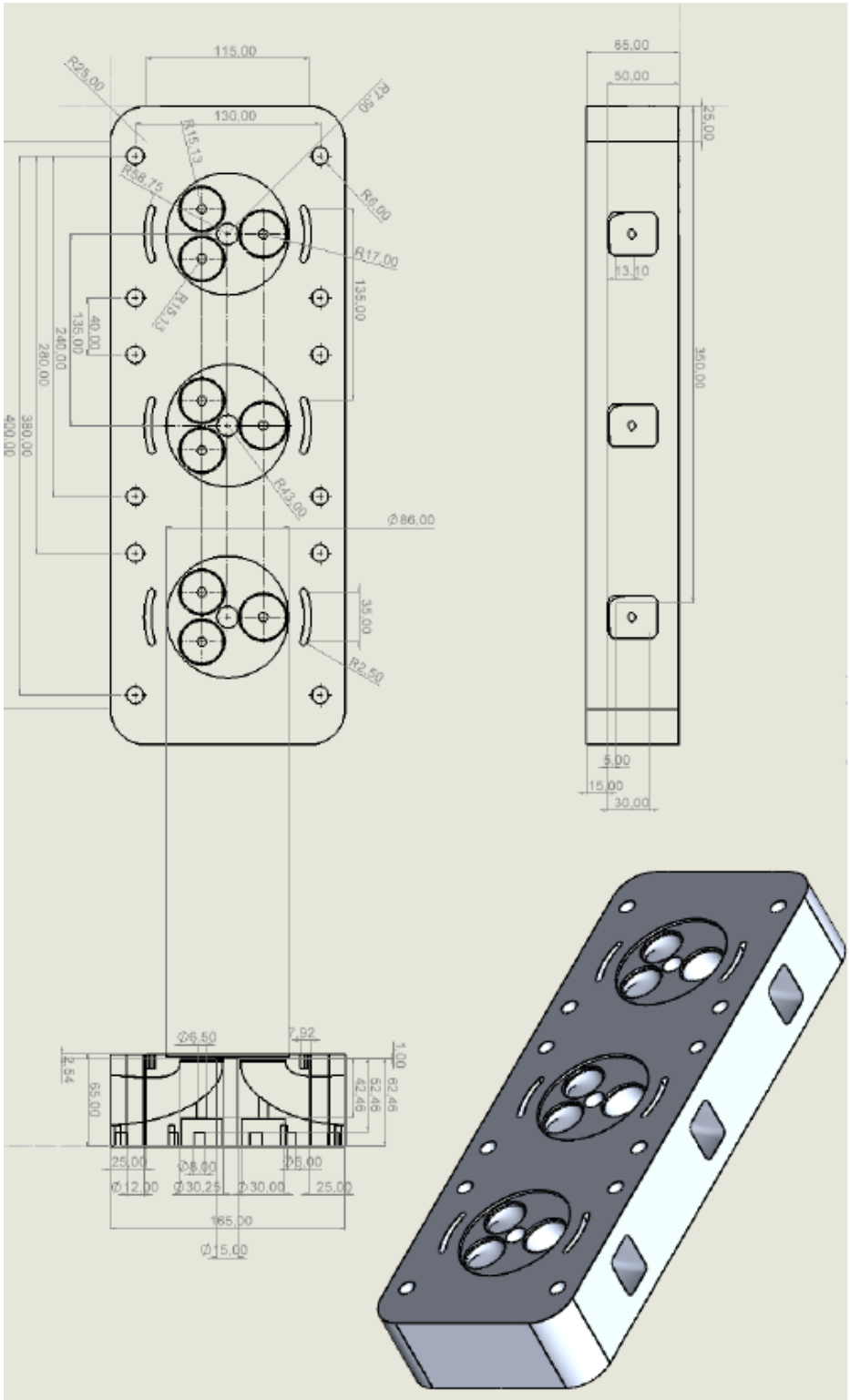

Figure 75: Technical drawing of engine up block

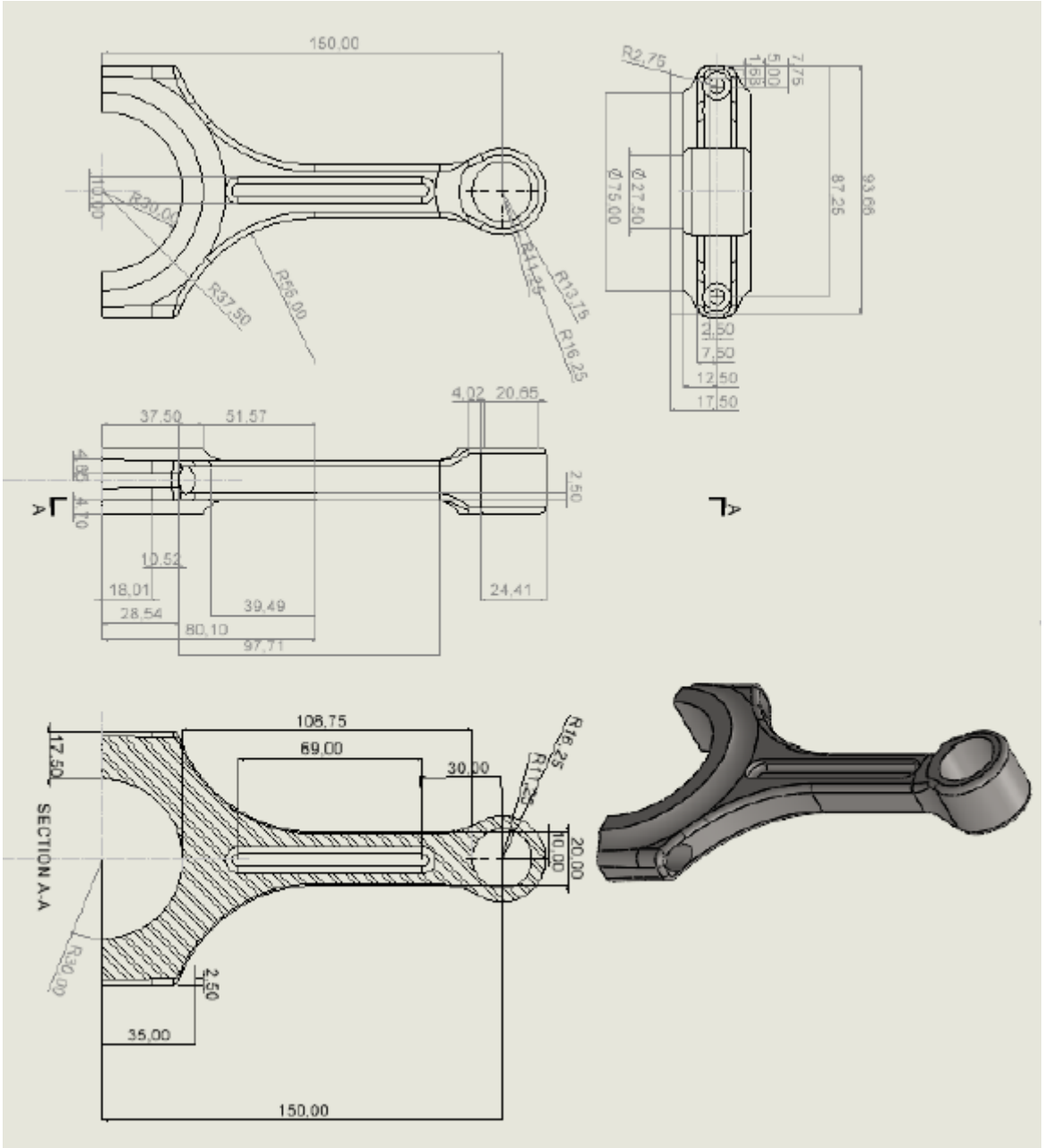

Figure 76: Technical drawing of piston rod body

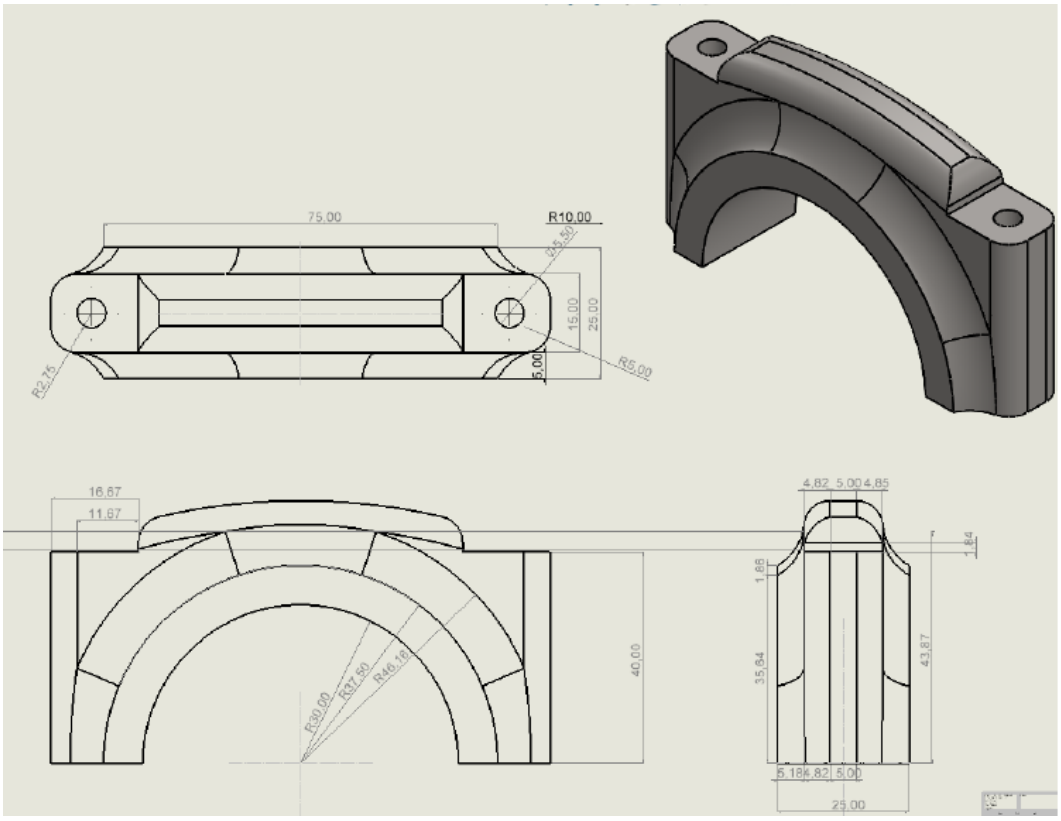

Figure 77: Technical drawing of piston rod down

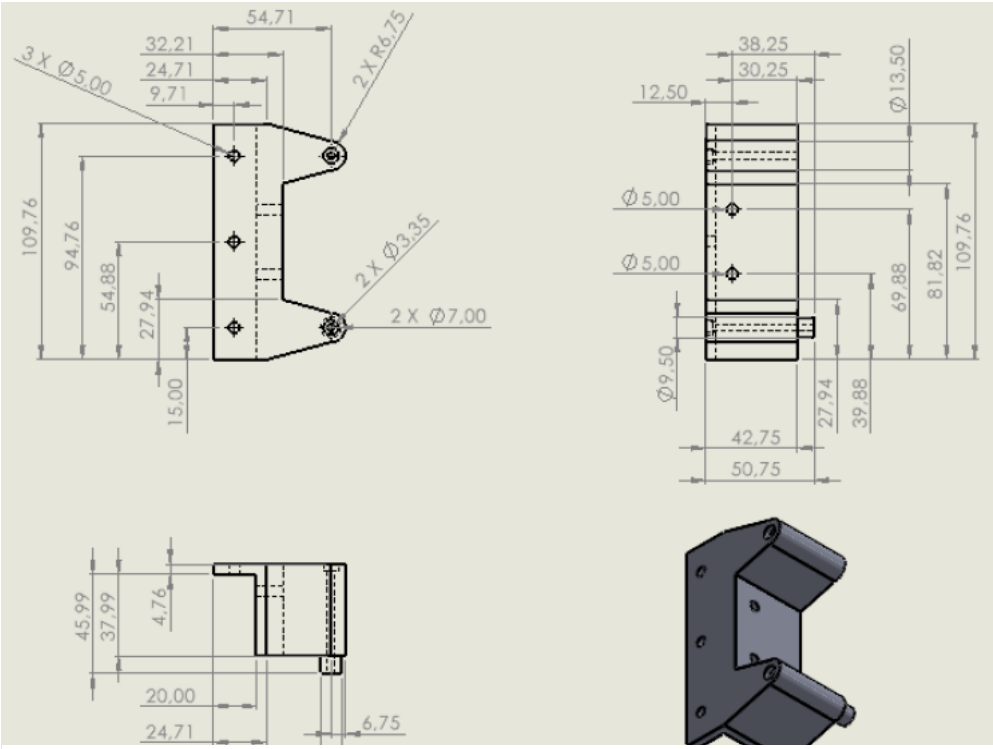

Figure 78: Technical drawing of alternator connect

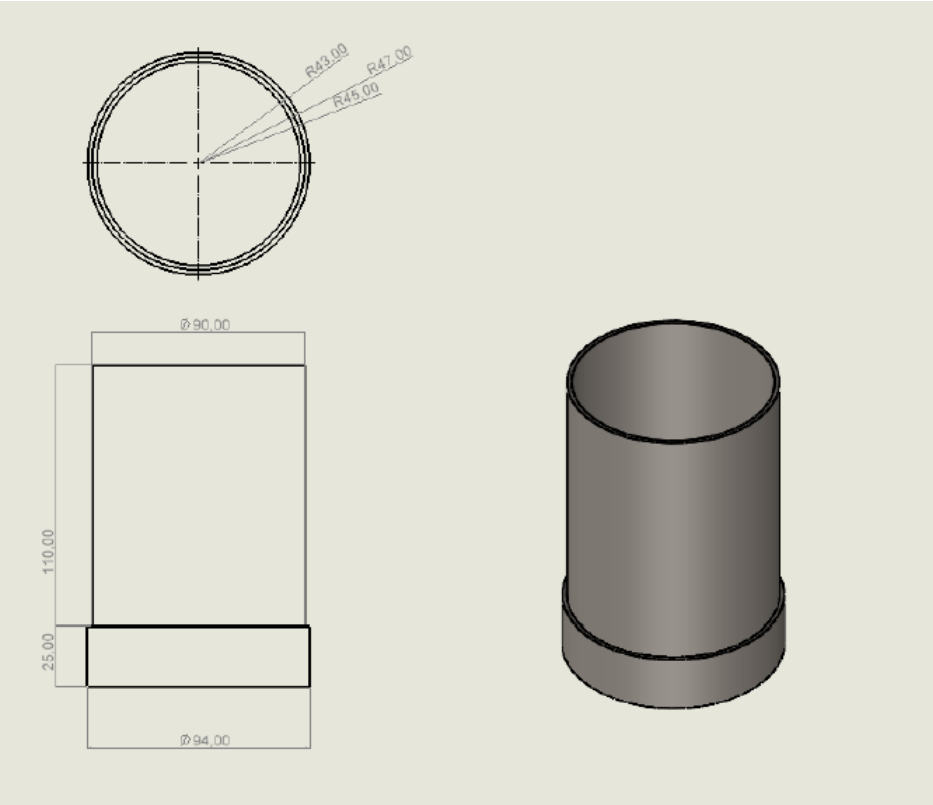

Figure 79: Technical drawing of cylinder liner

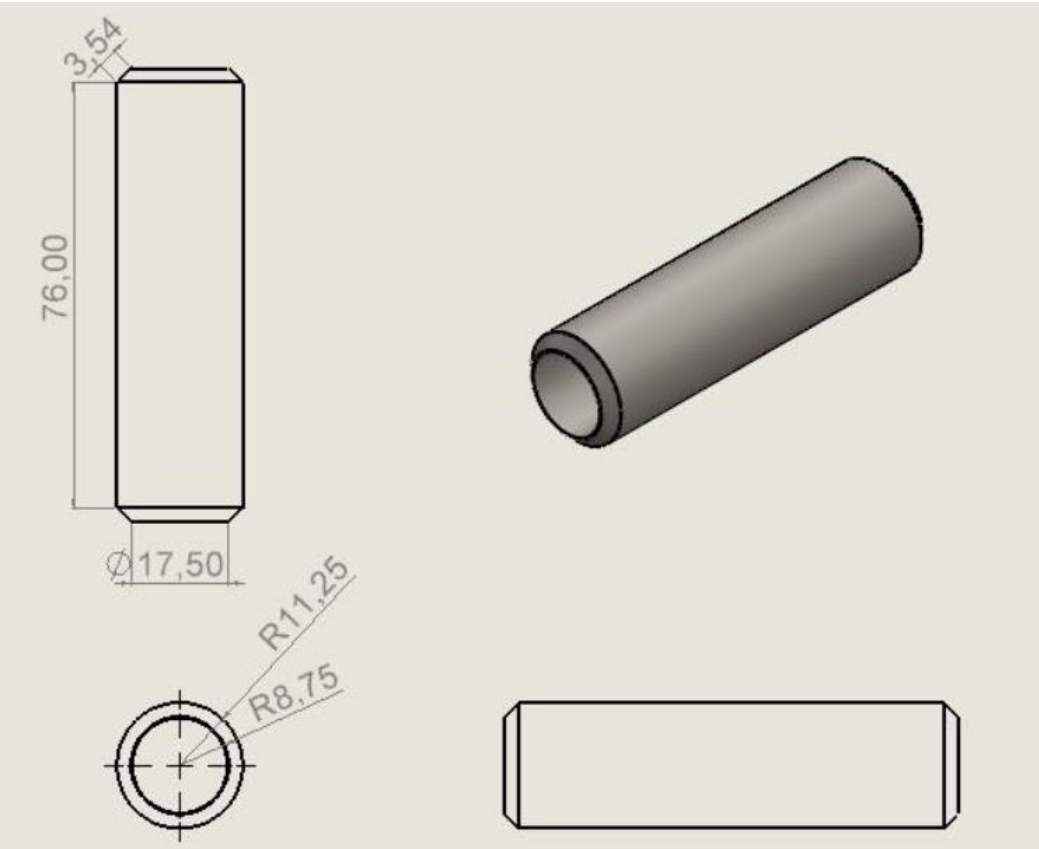

Figure 80: Technical drawing of piston pin

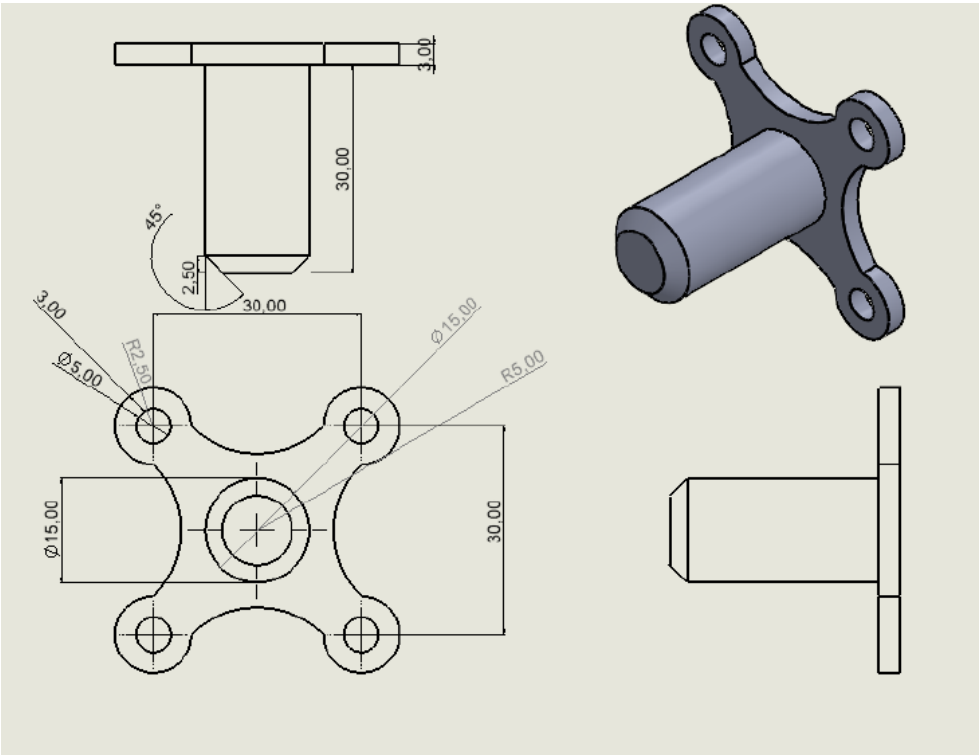

Figure 81: Technical drawing of pulley bracket

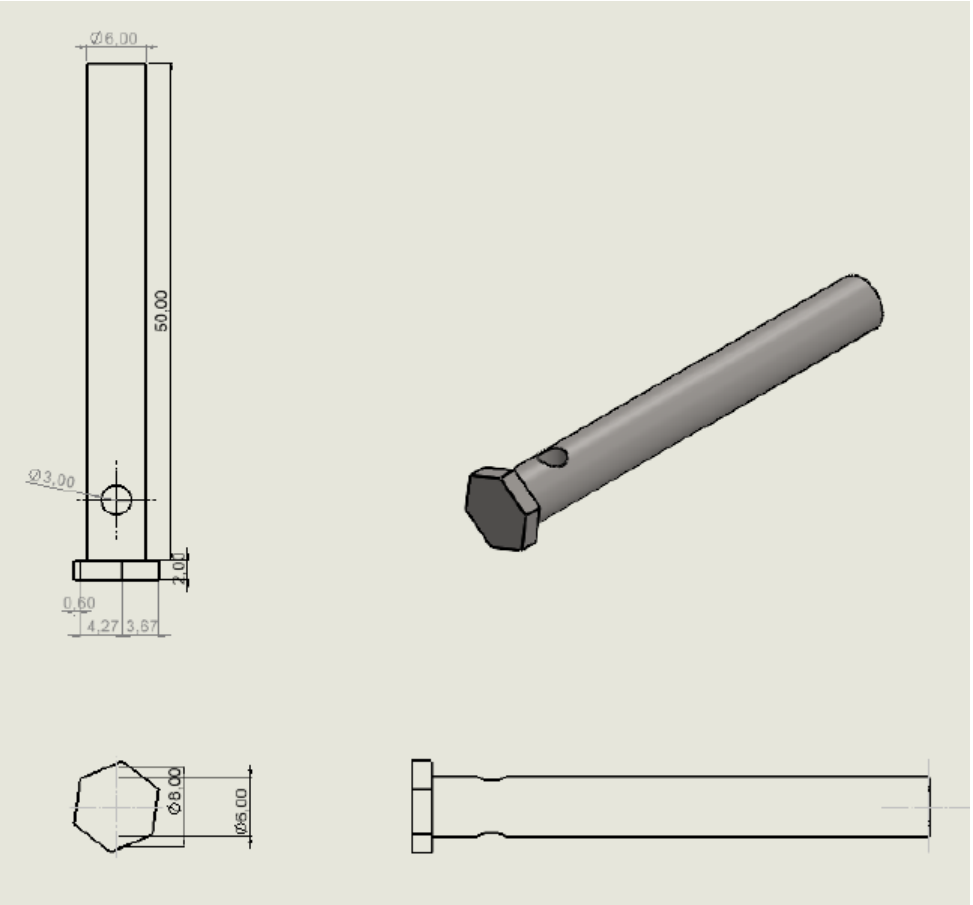

Figure 82: Technical drawing of docker screw

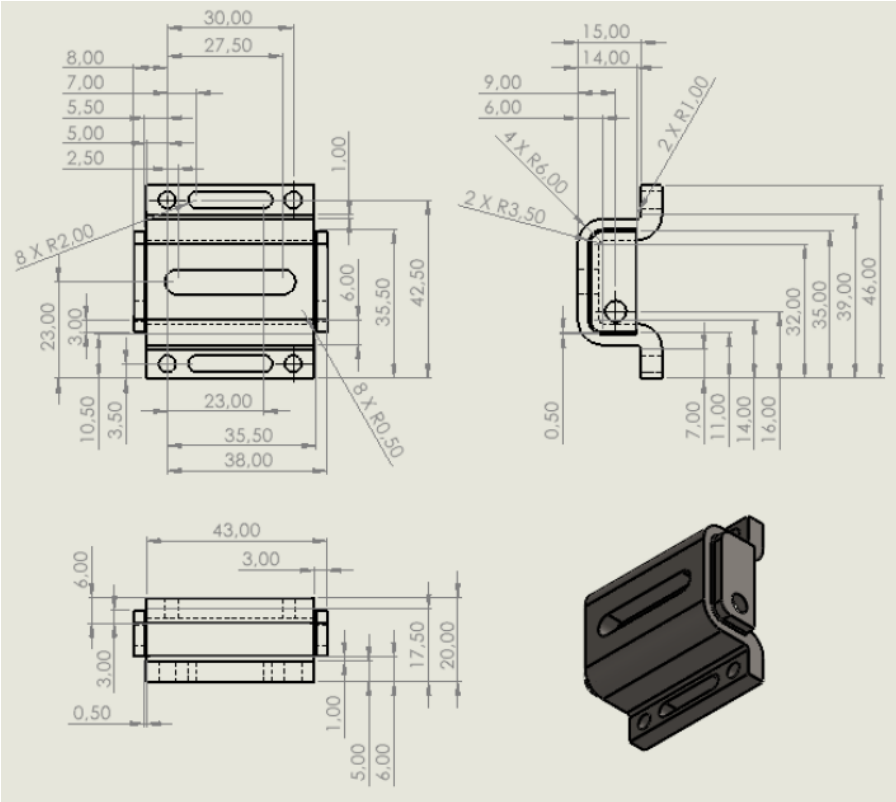

Figure 83:Technical drawing of tensioner base

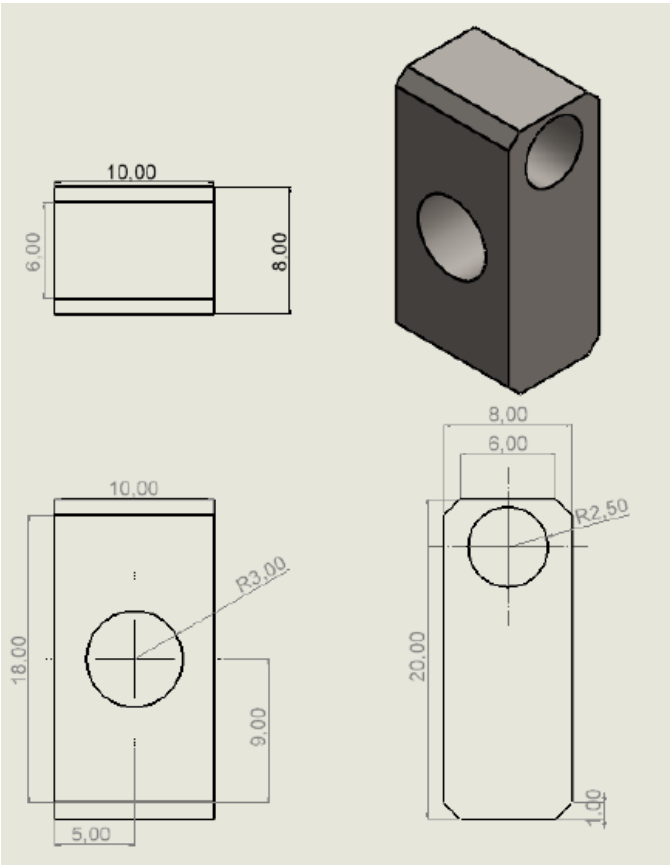

Figure 84: Technical drawing of tensioner slider

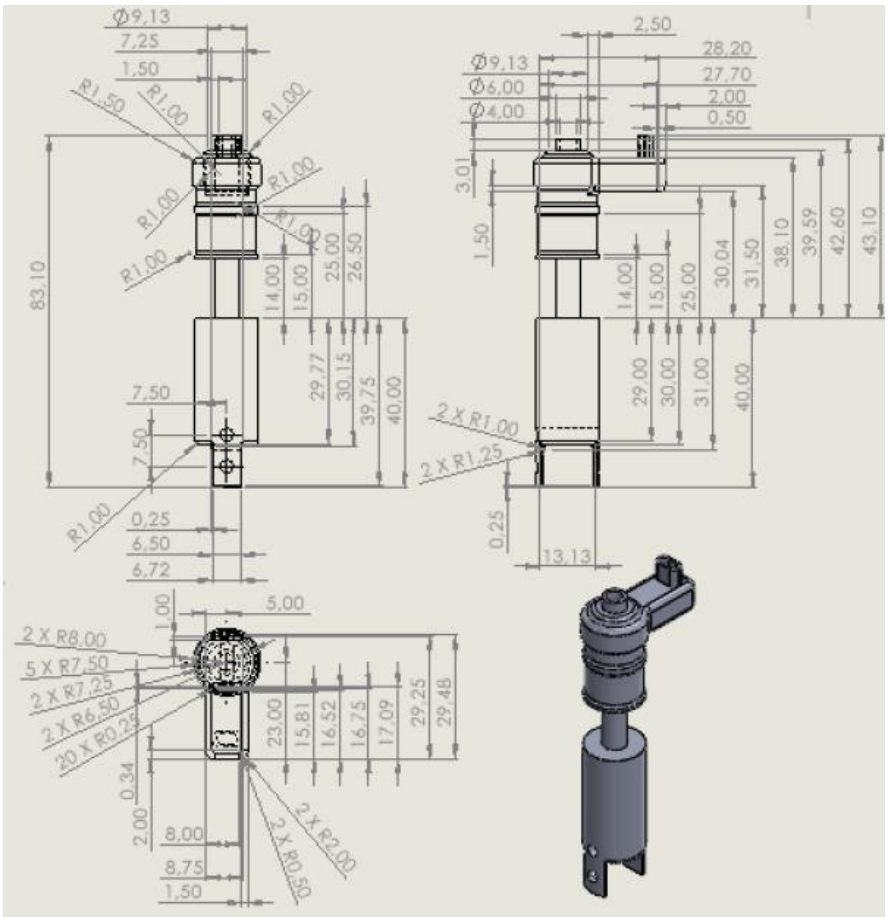

Figure 85: Technical drawing of unit pump system (Ups)

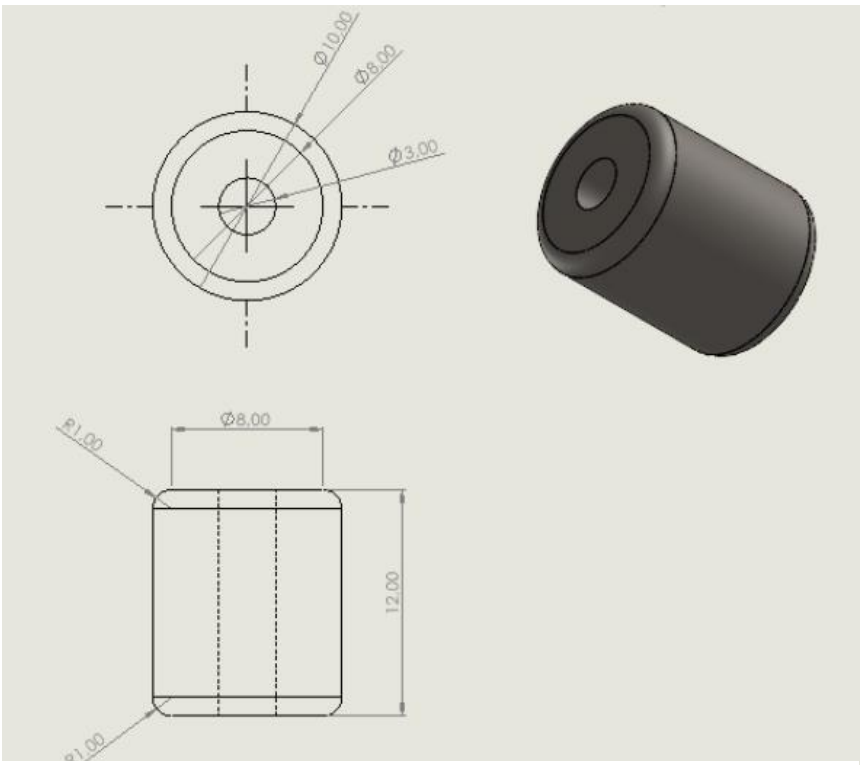

Figure 86: Technical drawing of UPS roller

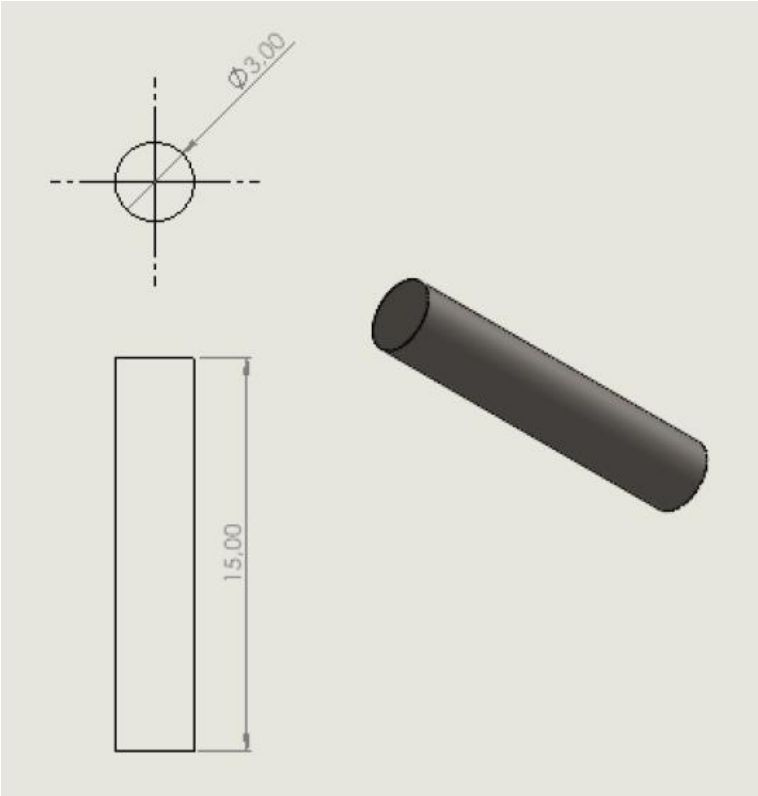

Figure 87: Technical drawing of UPS roller pin

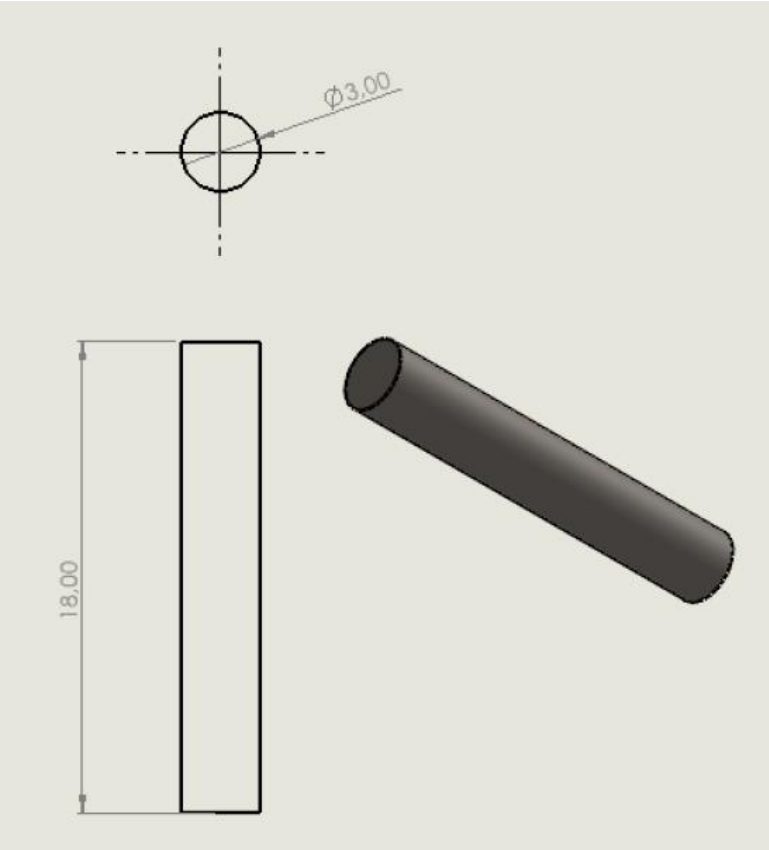

Figure 88: Technical drawing of UPS rocker pin

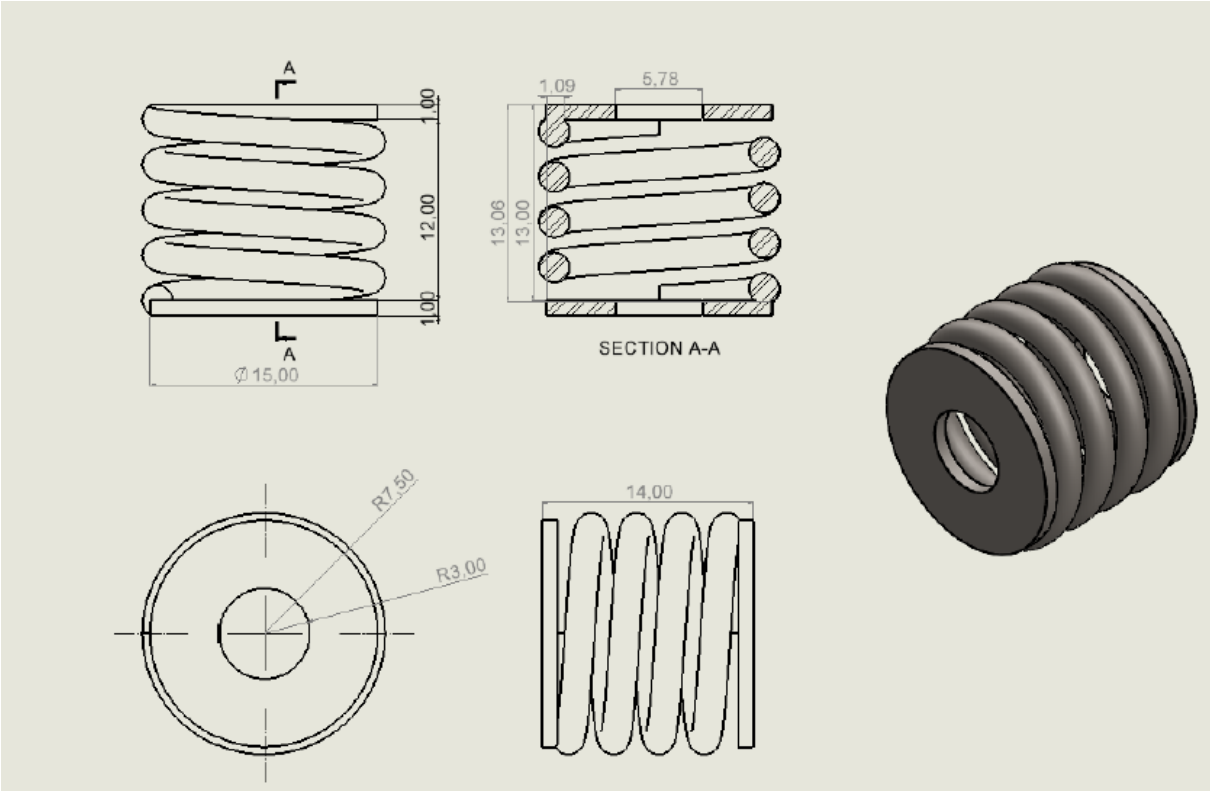

Figure 89: Technical drawing of UPS spring

8.1. New design parts and technical drawings

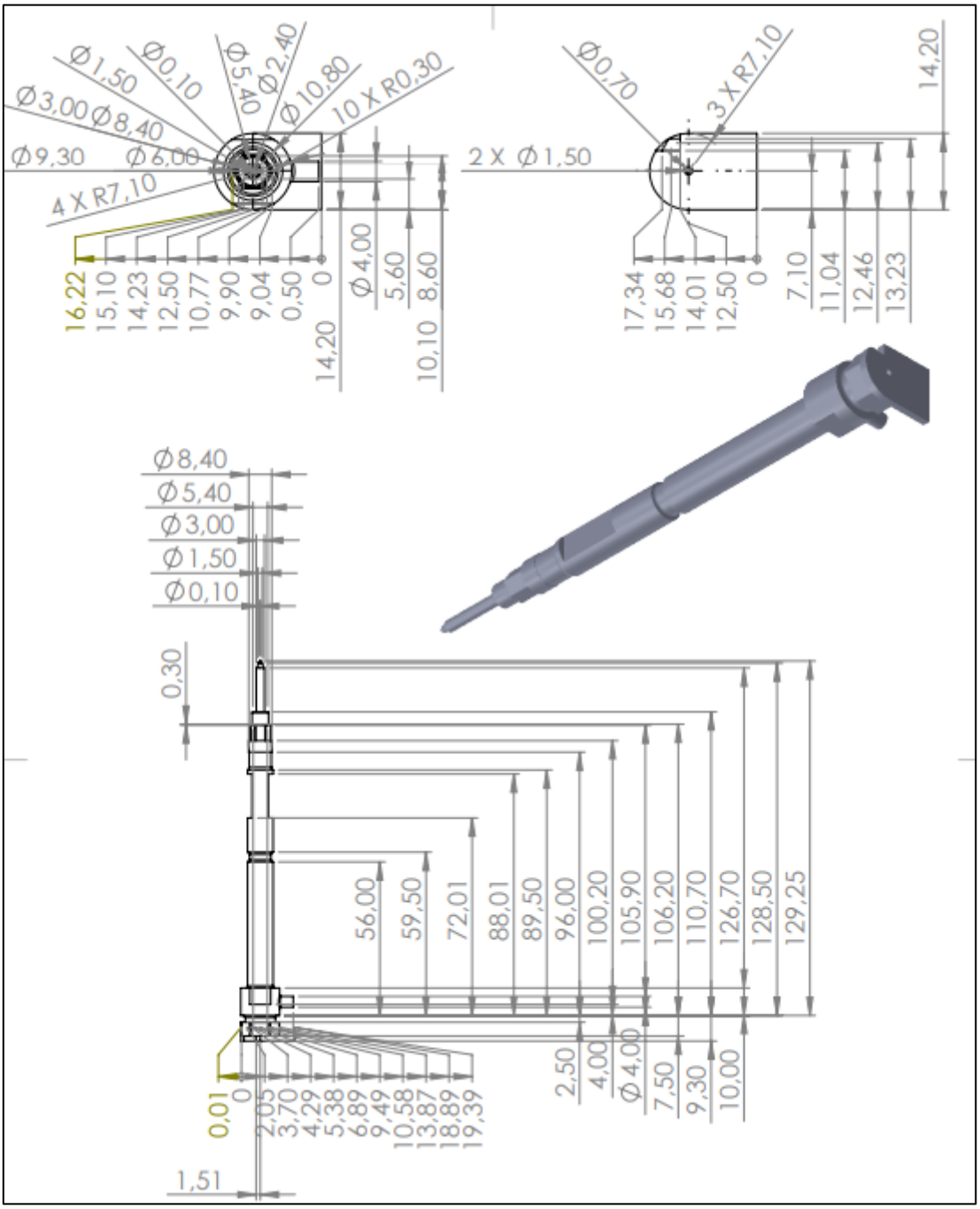

Figure 90: Technical drawing of injector

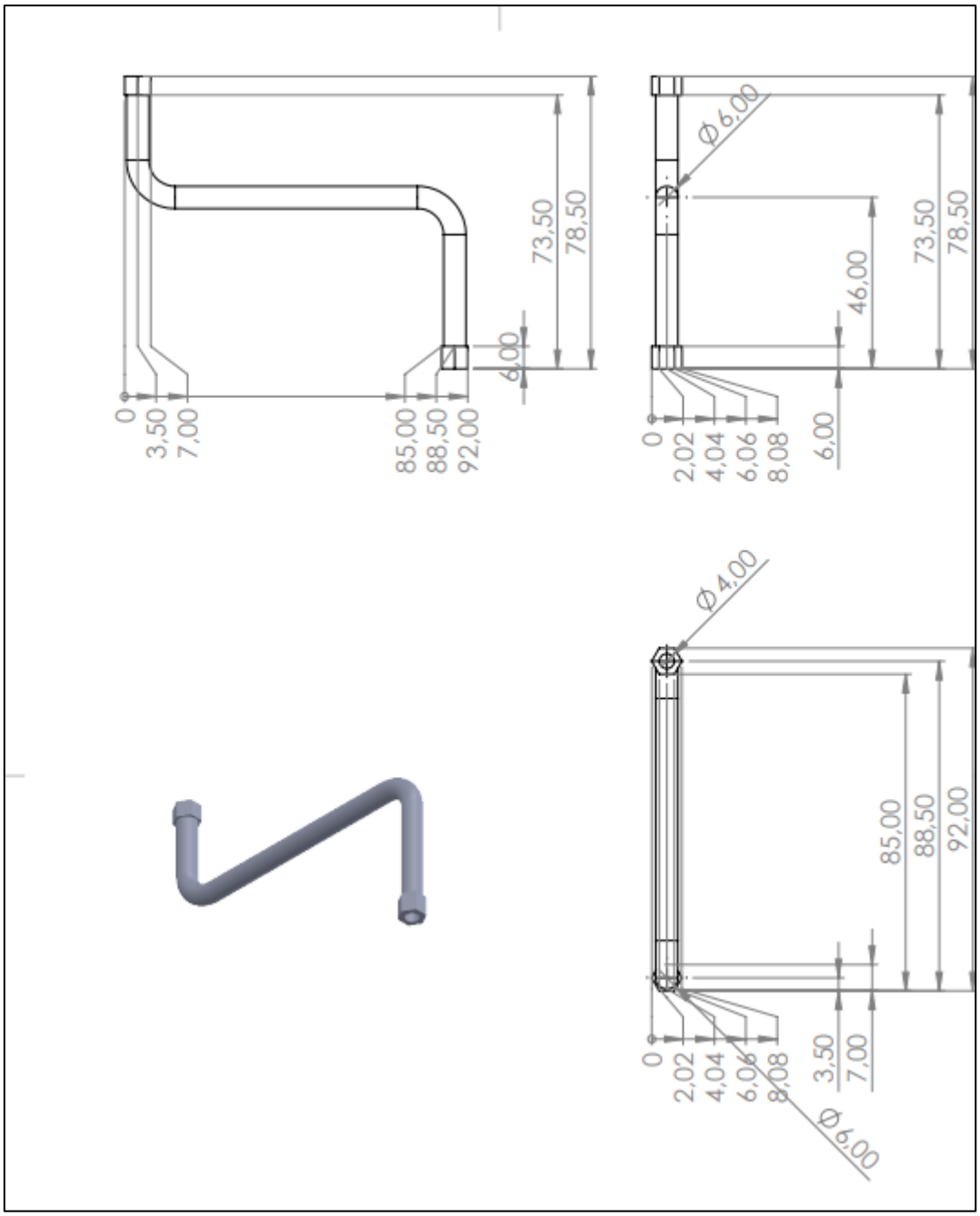

Figure 91: Technical drawing of injector-rail connection 1

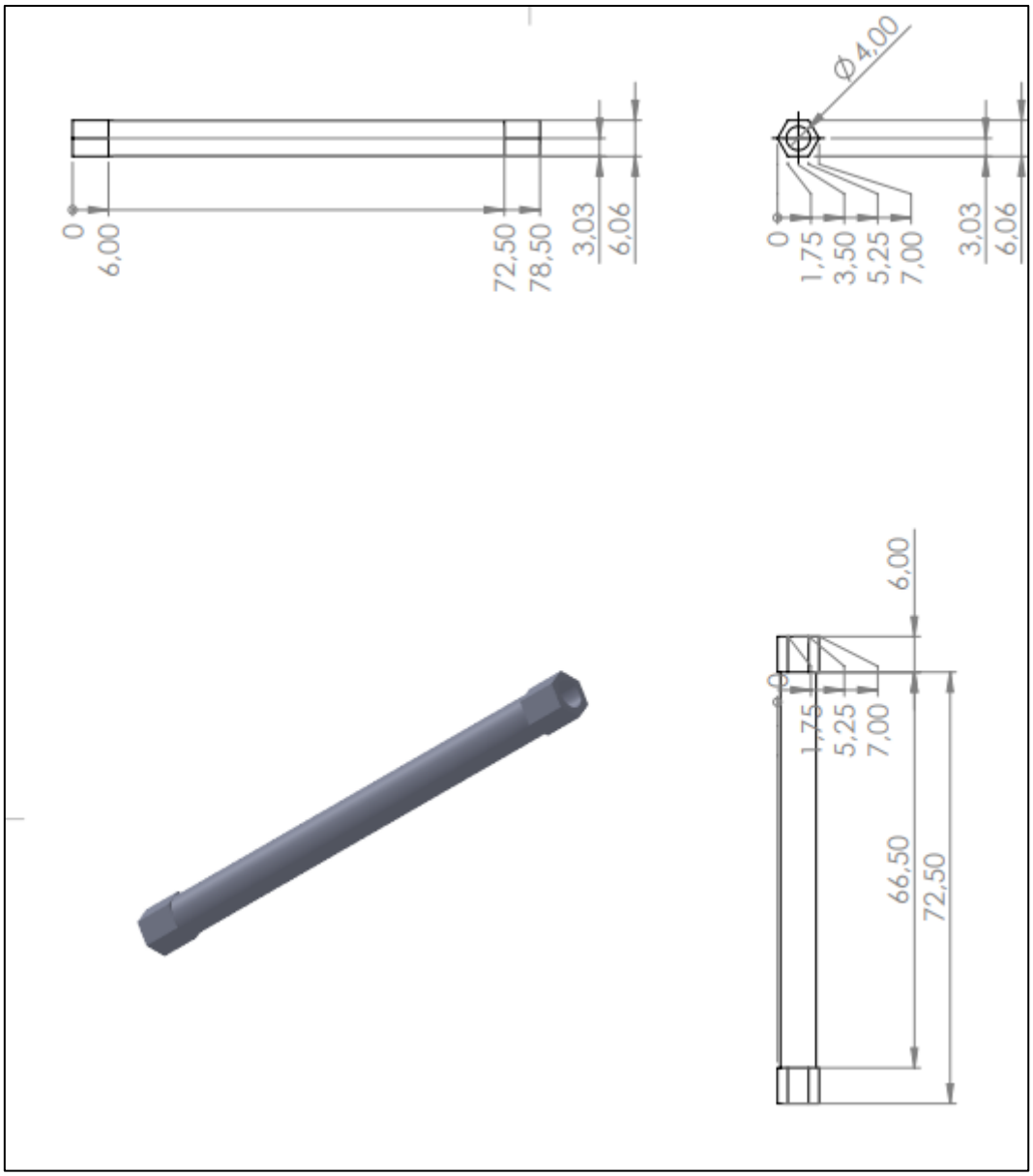

Figure 92: Technical drawing of injector-rail connection 2

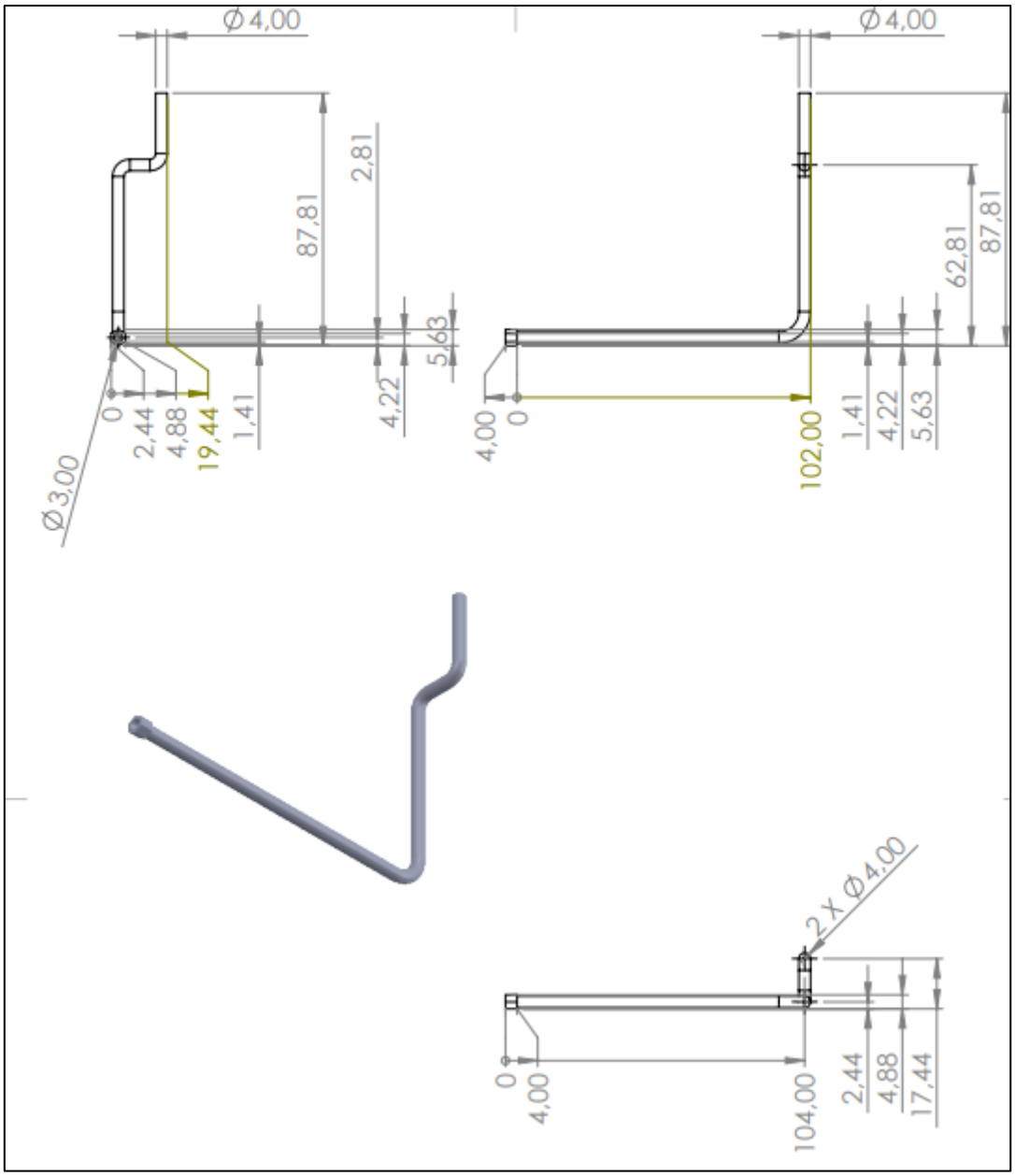

Figure 93: Technical drawing of fuel filter pipe 1

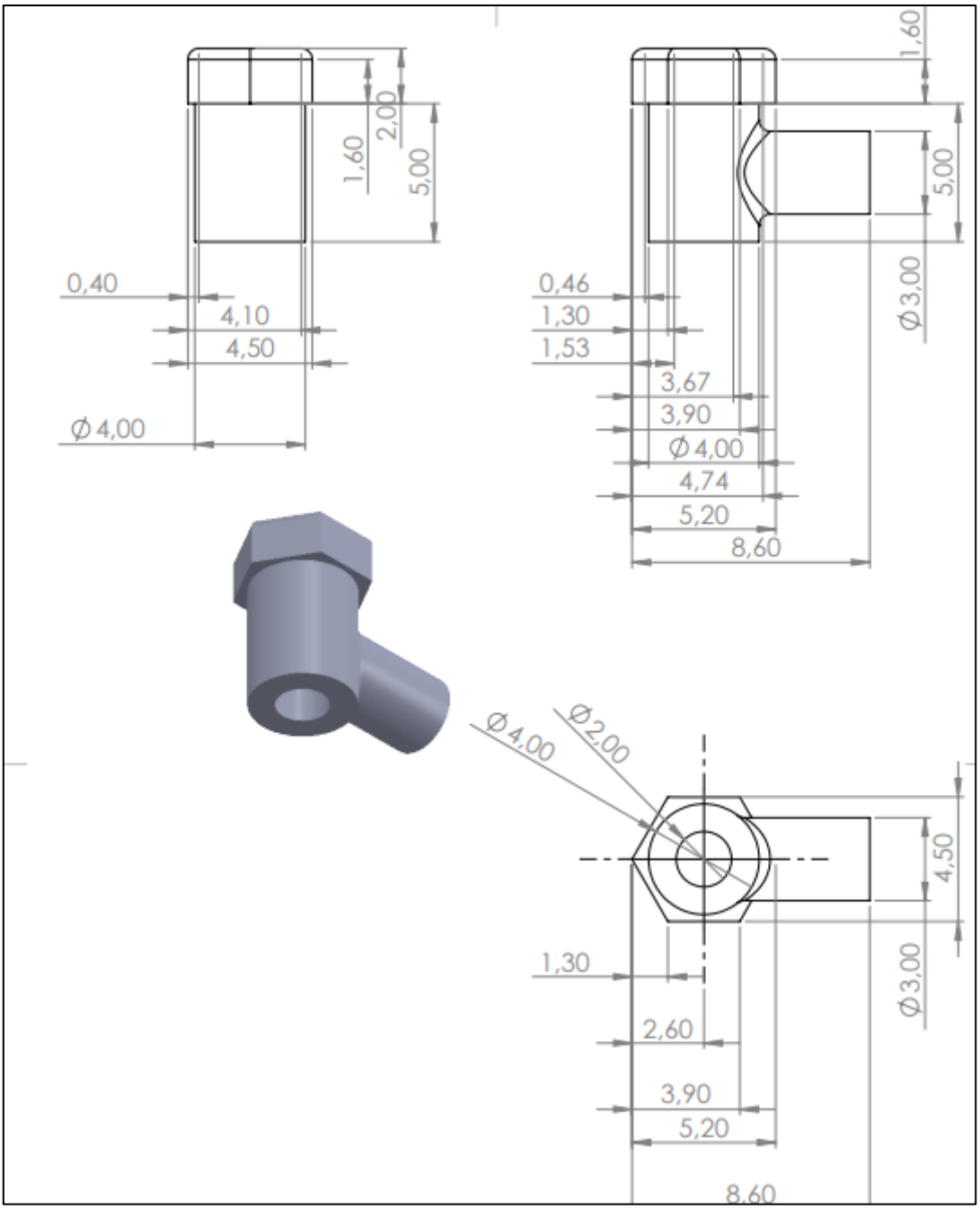

Figure 94: Technical drawing of common rail piece

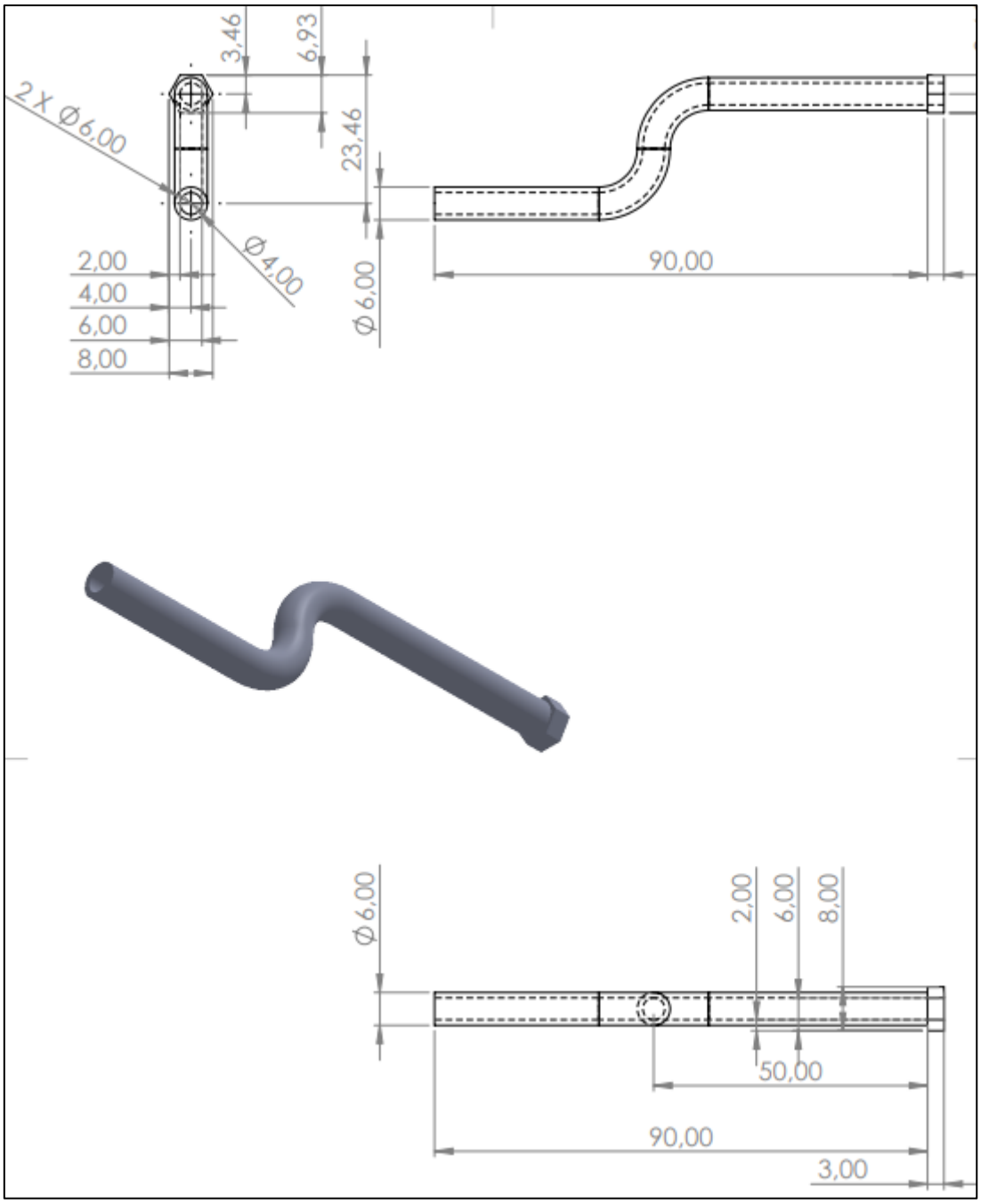

Figure 95: Technical drawing of piece pipe

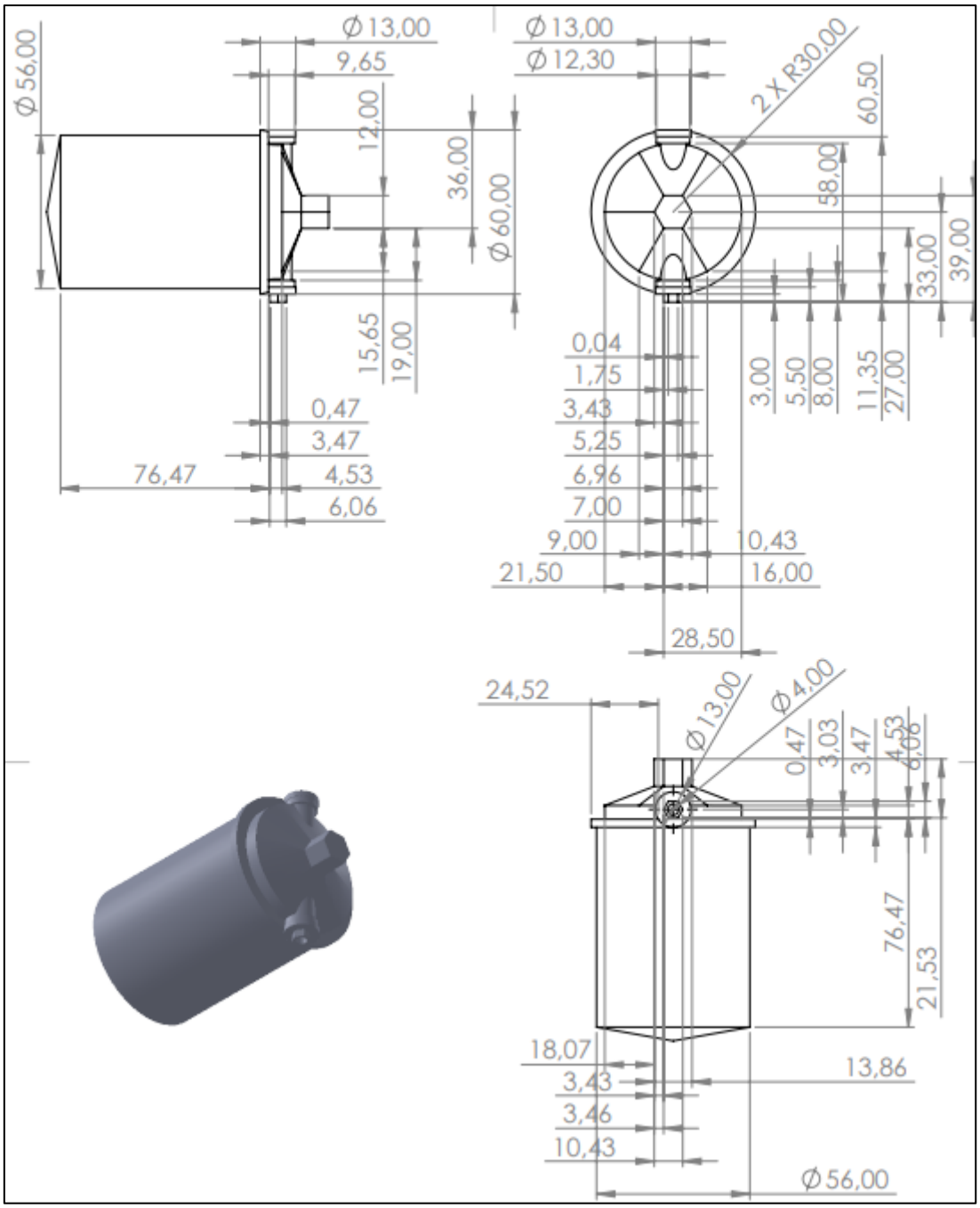

Figure 96: Technical drawing of fuel filter

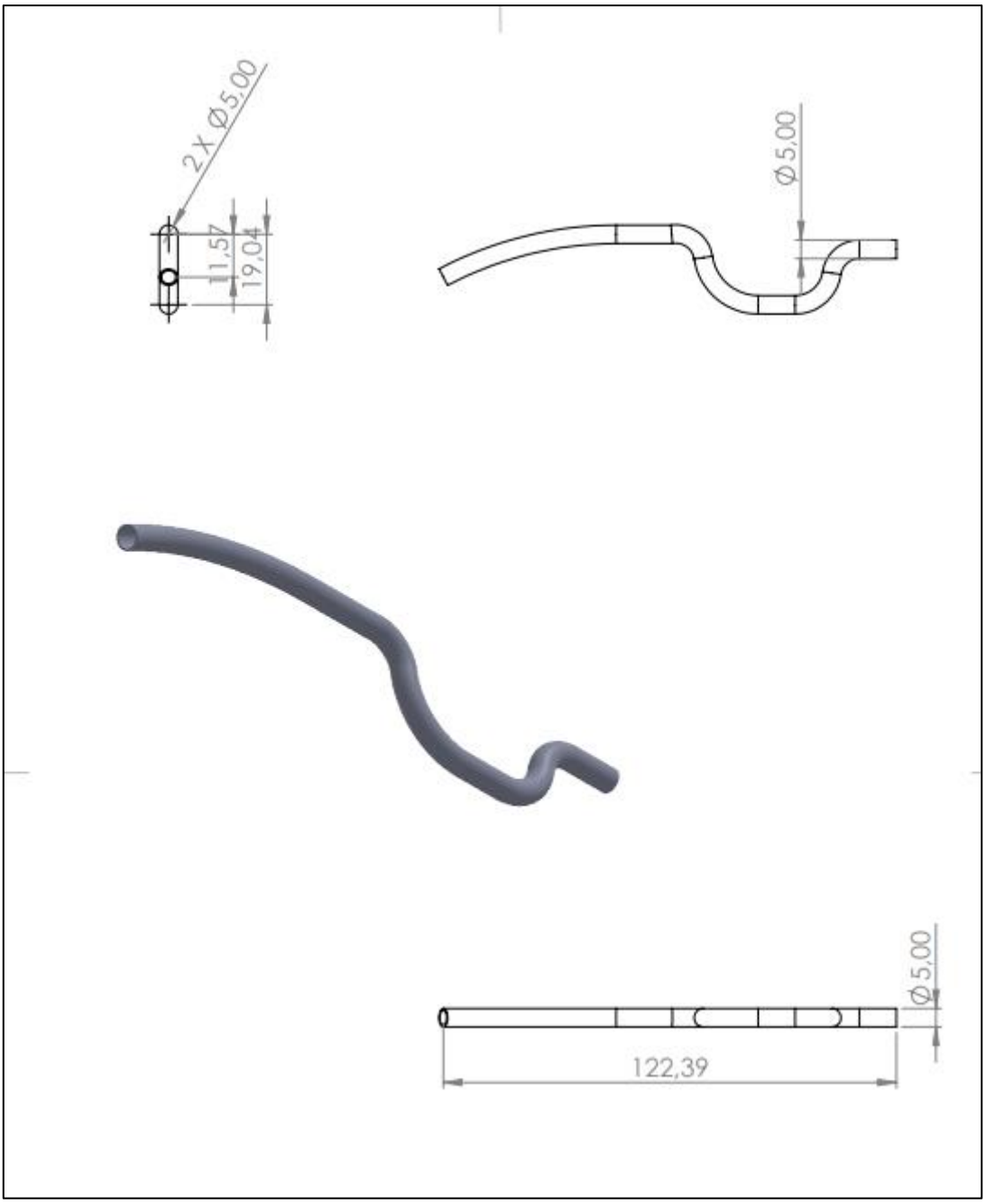

Figure 97: Technical drawing of fuel filter pipe 2

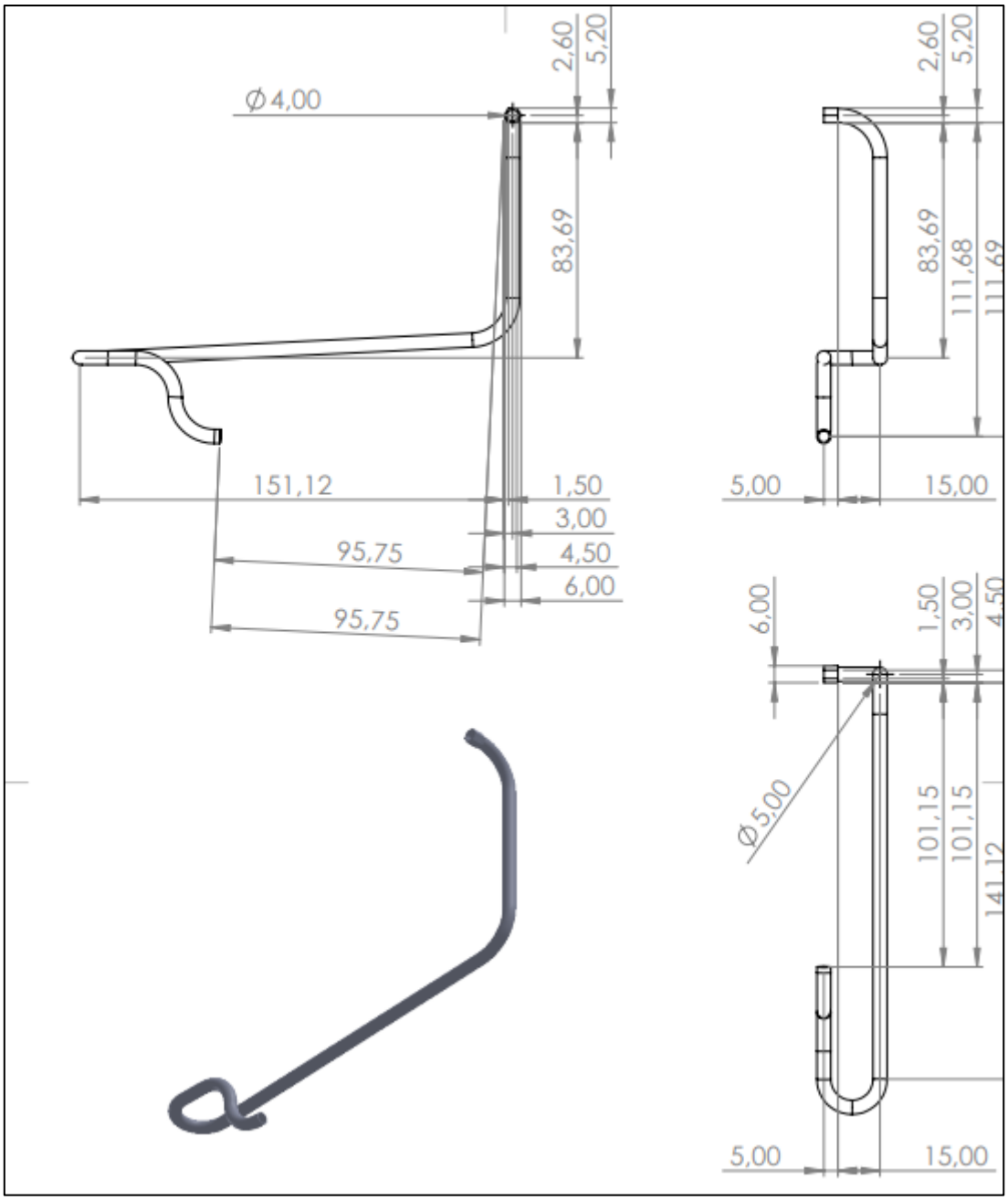

Figure 98: Technical drawing of fuel filter-pump pipe

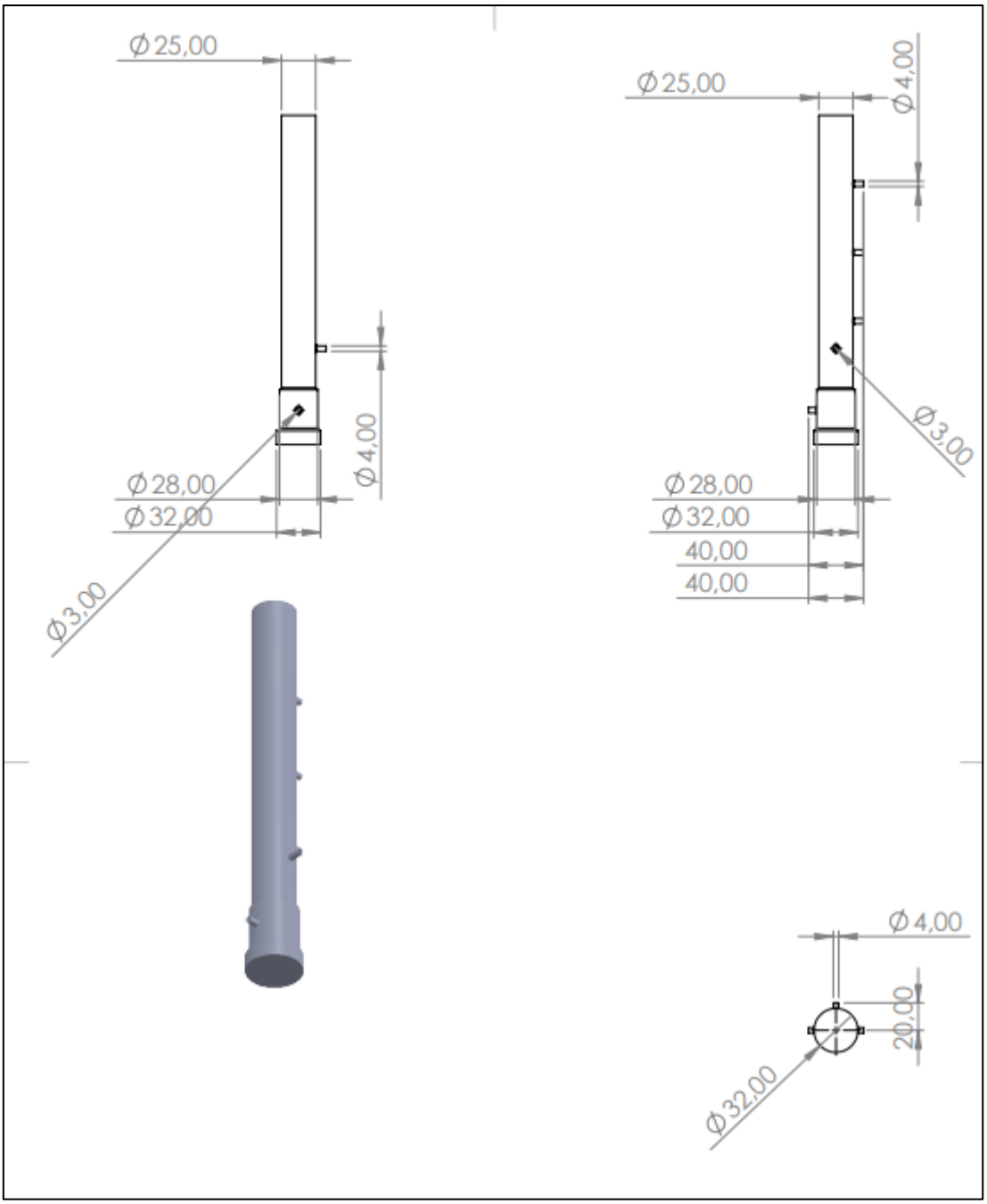

Figure 99: Technical drawing of rail

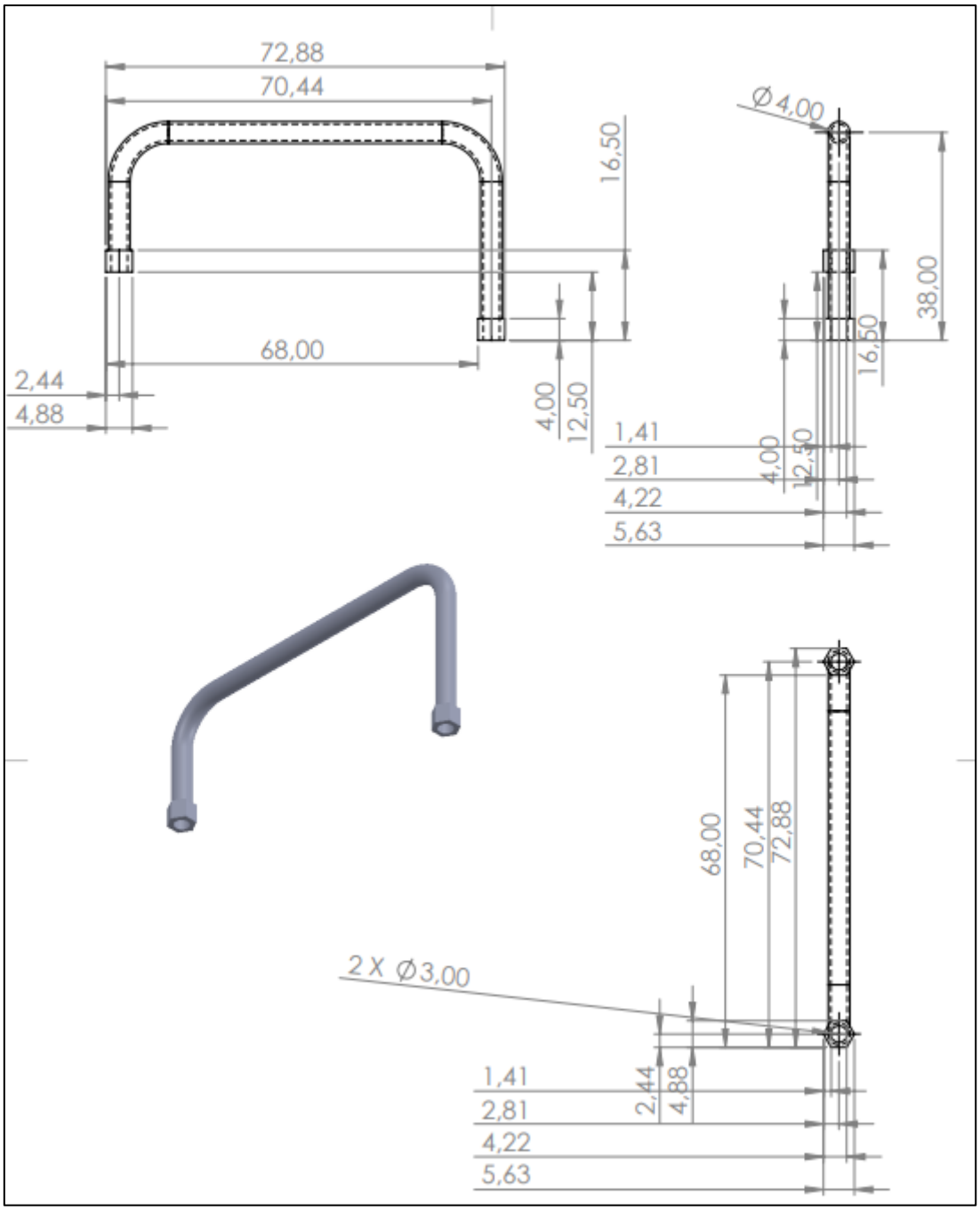

Figure 100: Technical drawing of rail pipe 1

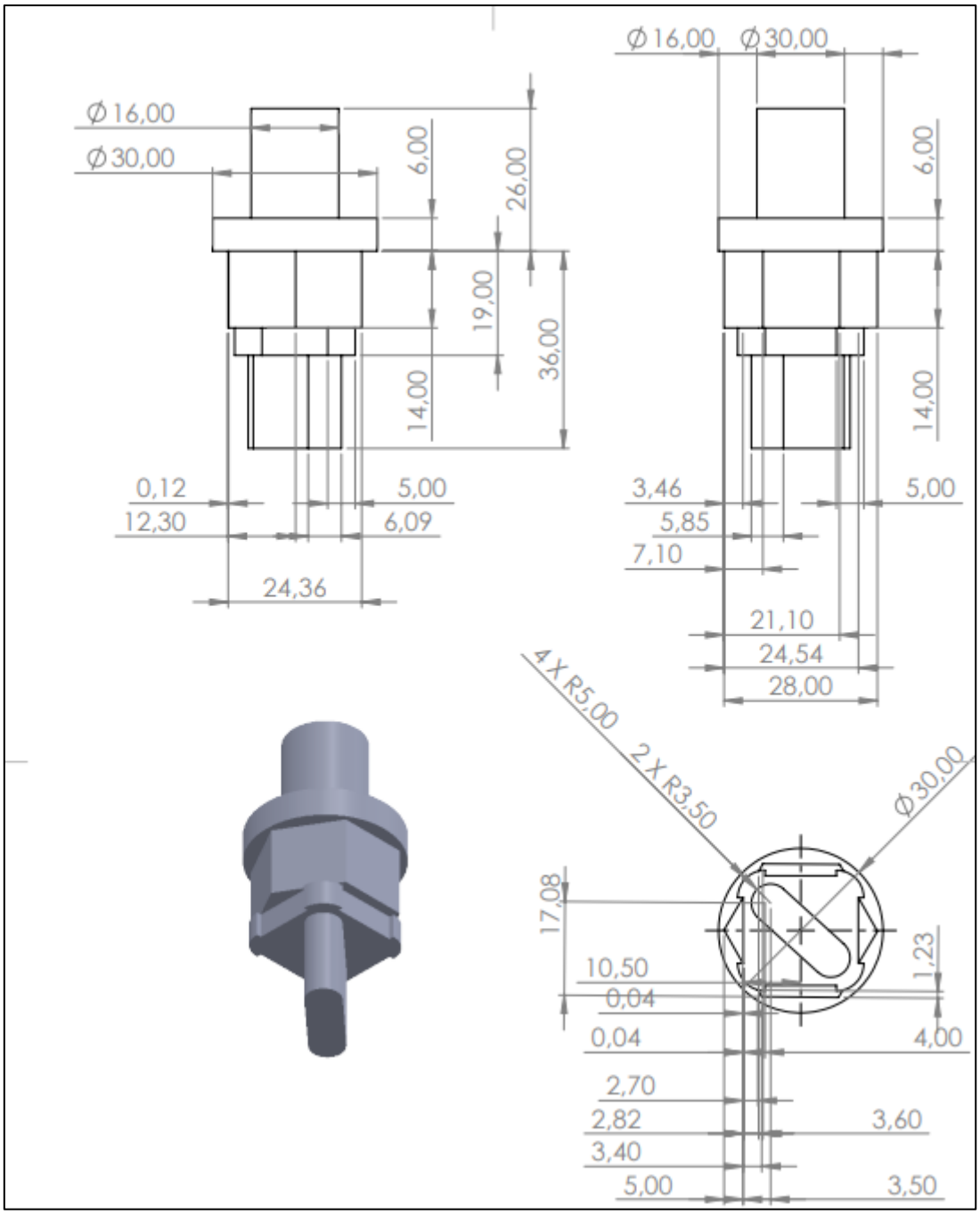

Figure 101: Technical drawing of rail plug

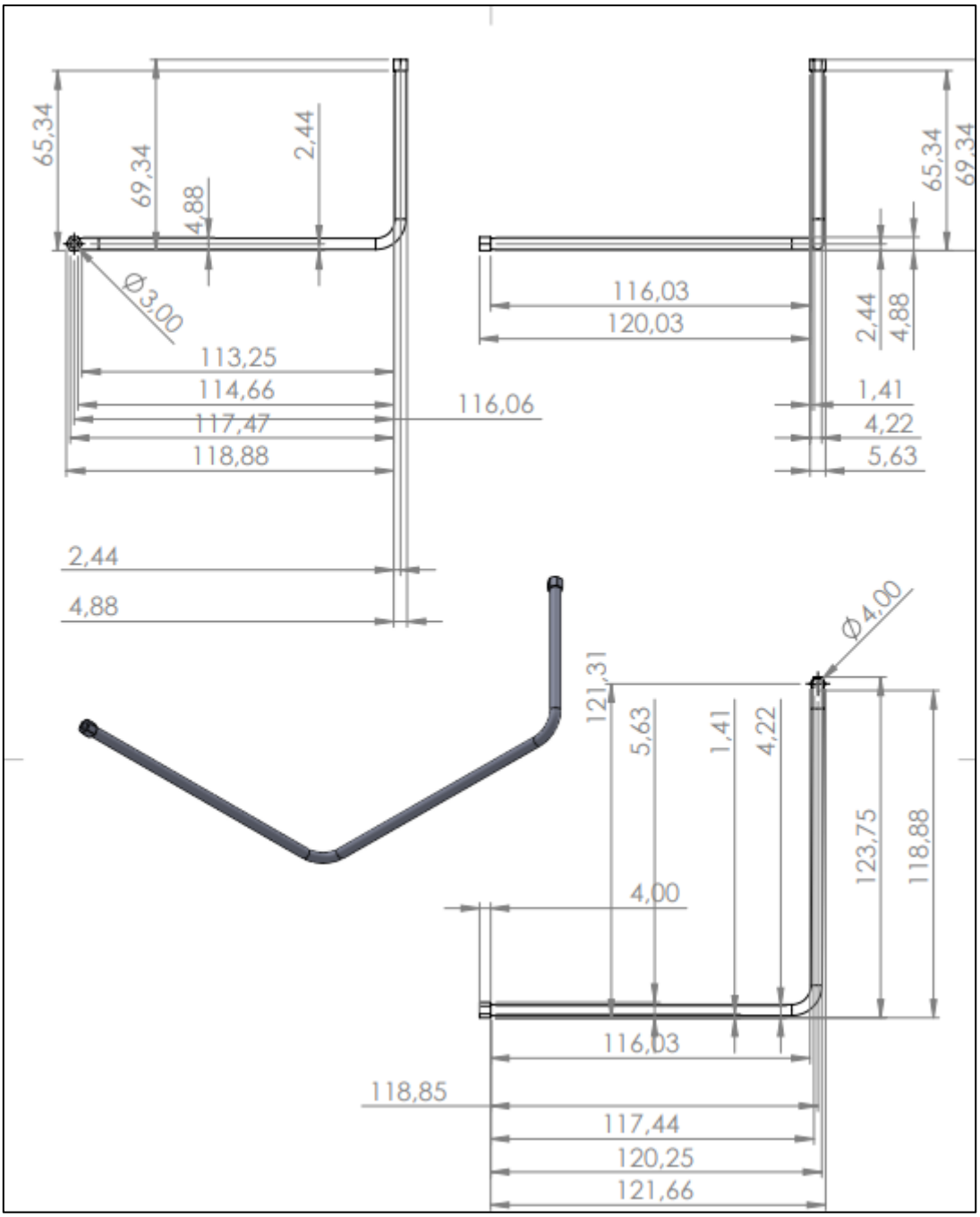

Figure 102: Technical drawing of rail pipe 2

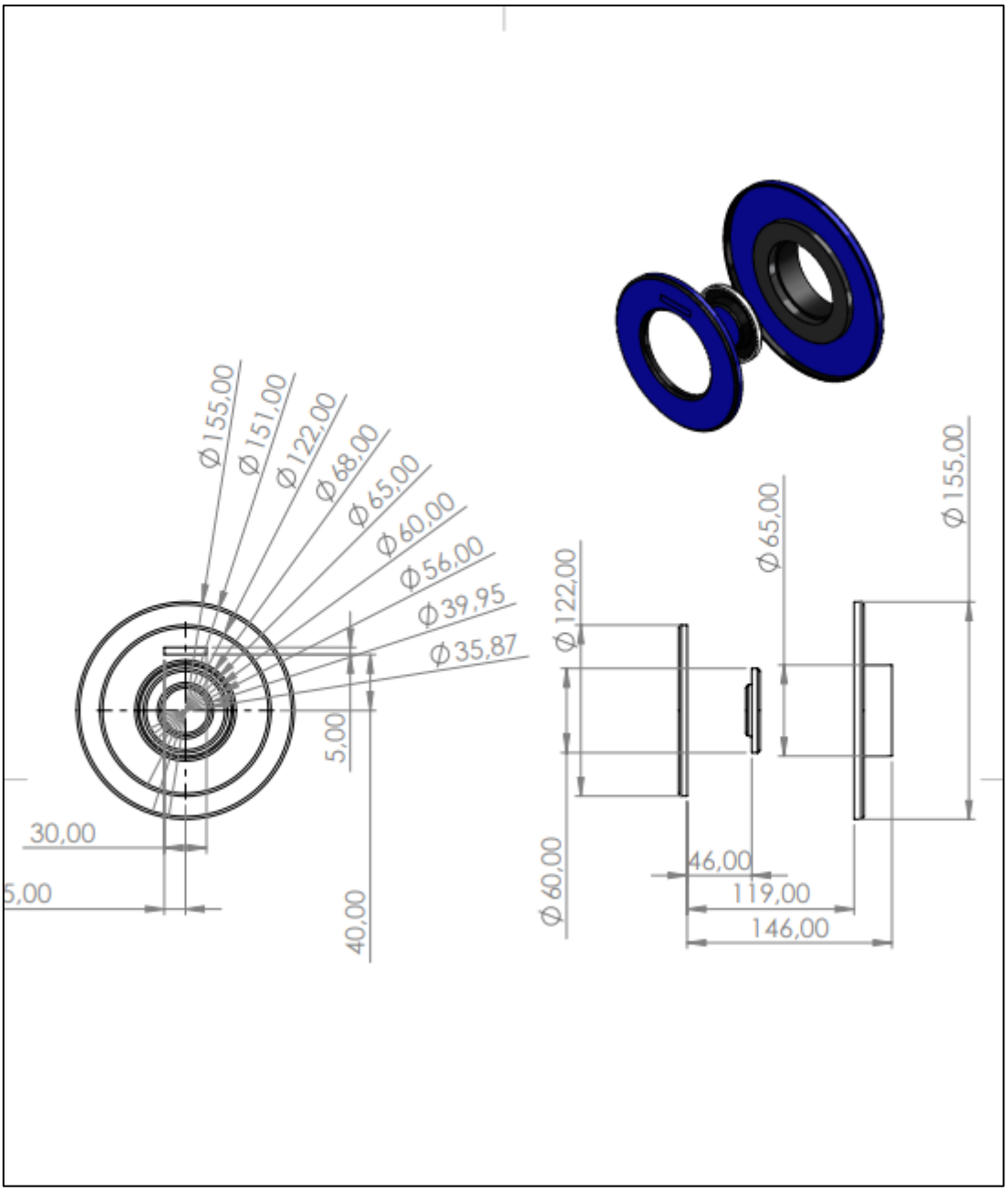

Figure 103: Technical drawing of air filter

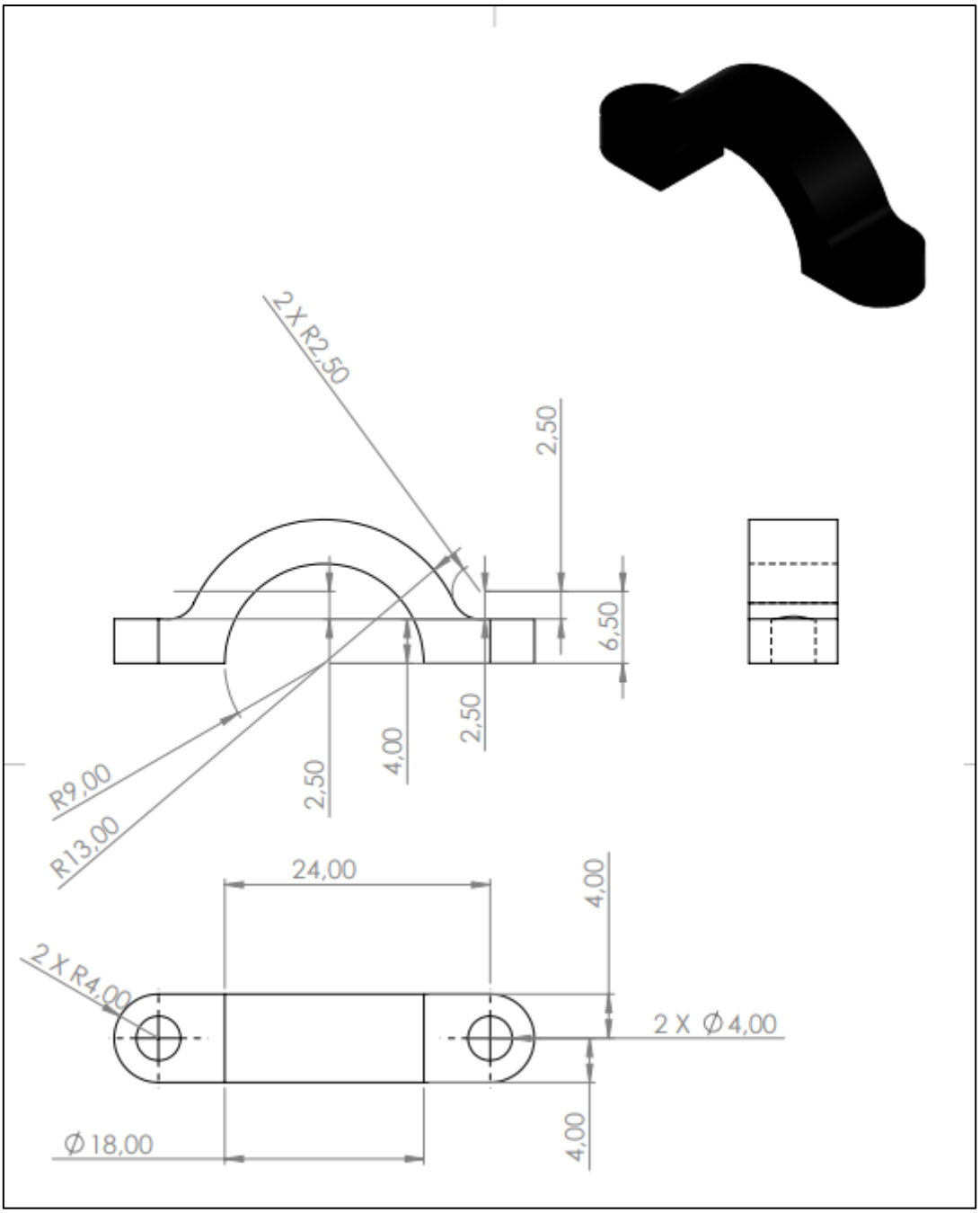

Figure 104: Technical drawing of camshaft bearing

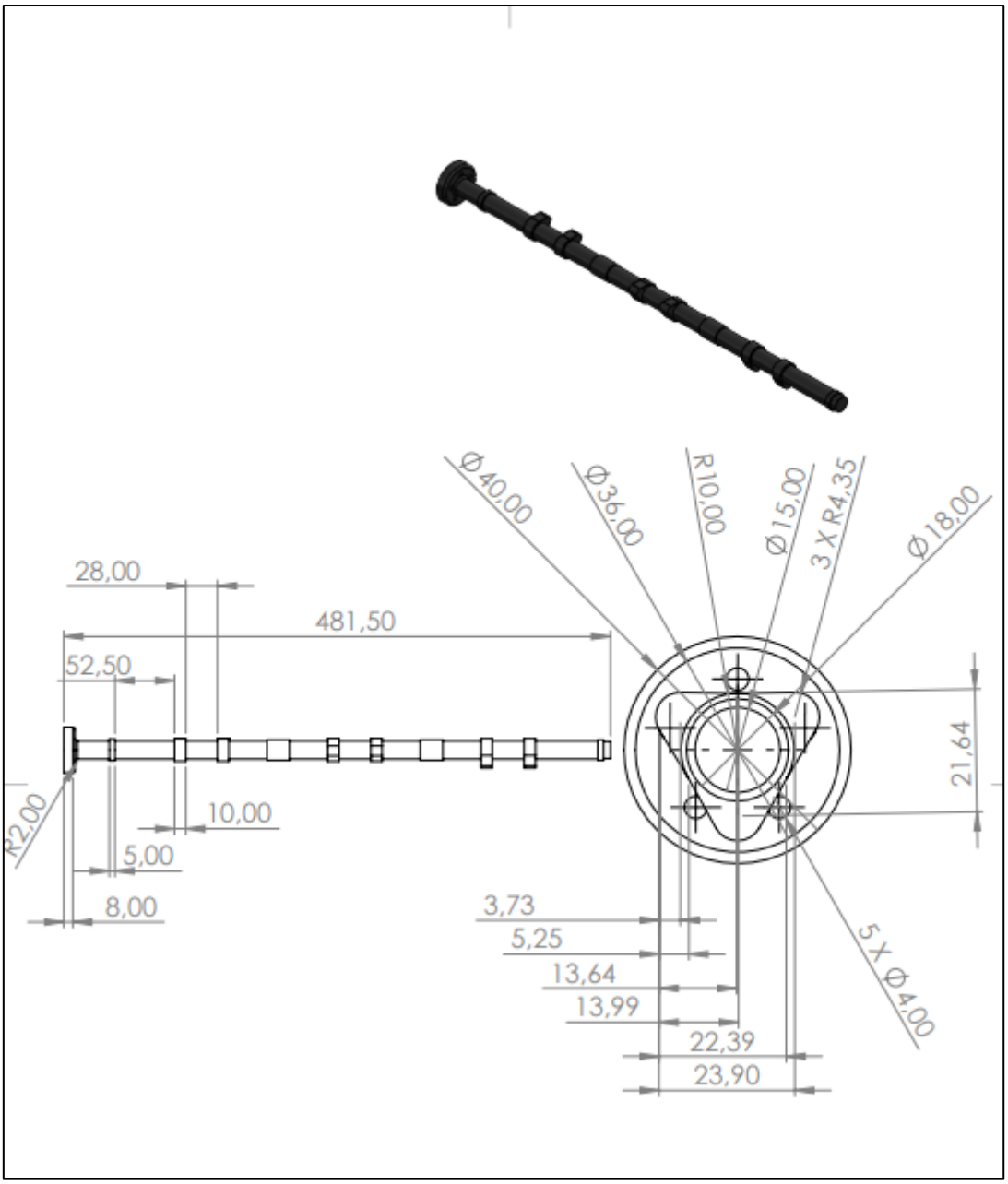

Figure 105: Technical drawing of camshaft

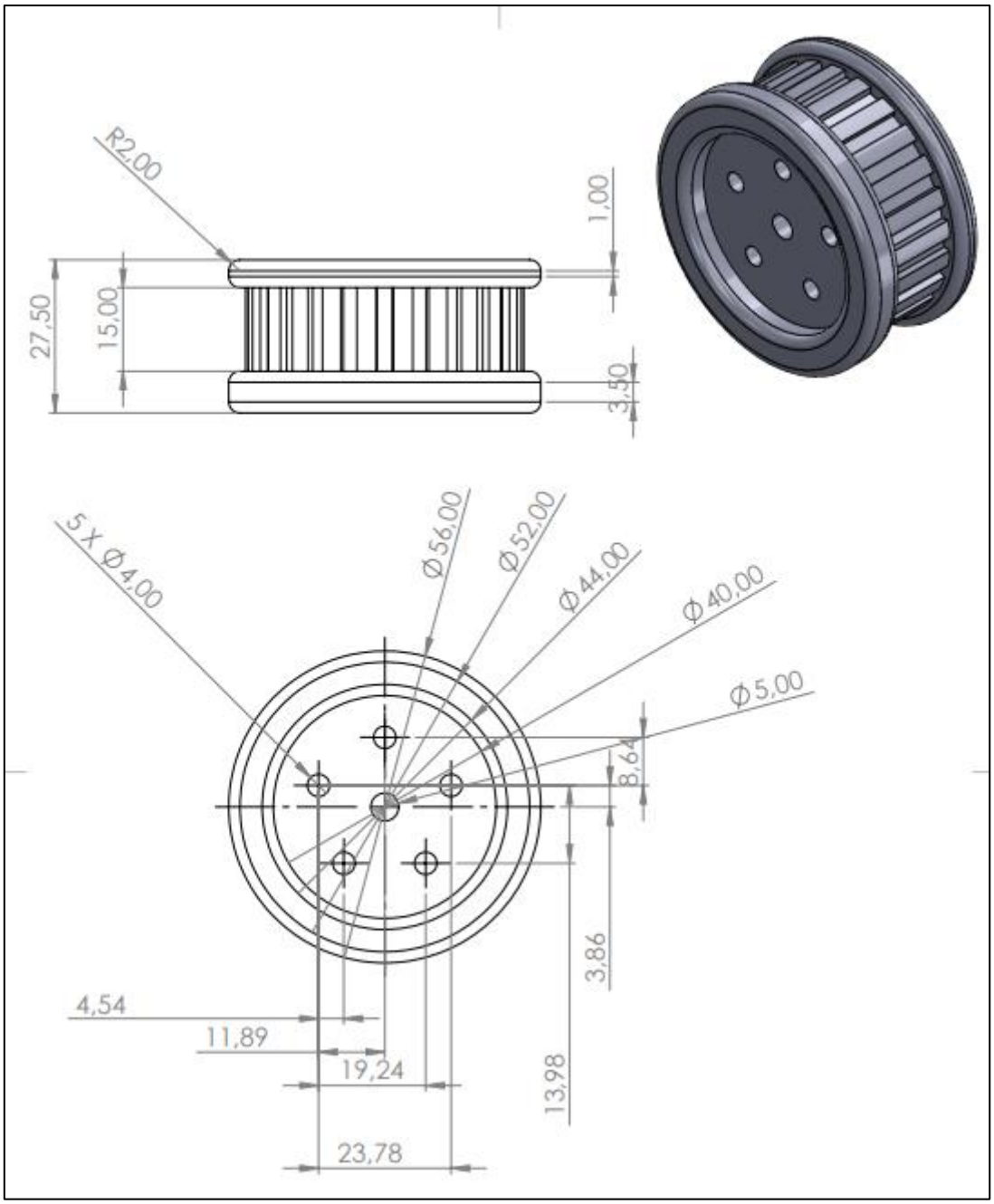

Figure 106: Technical drawing of camshaft pulley

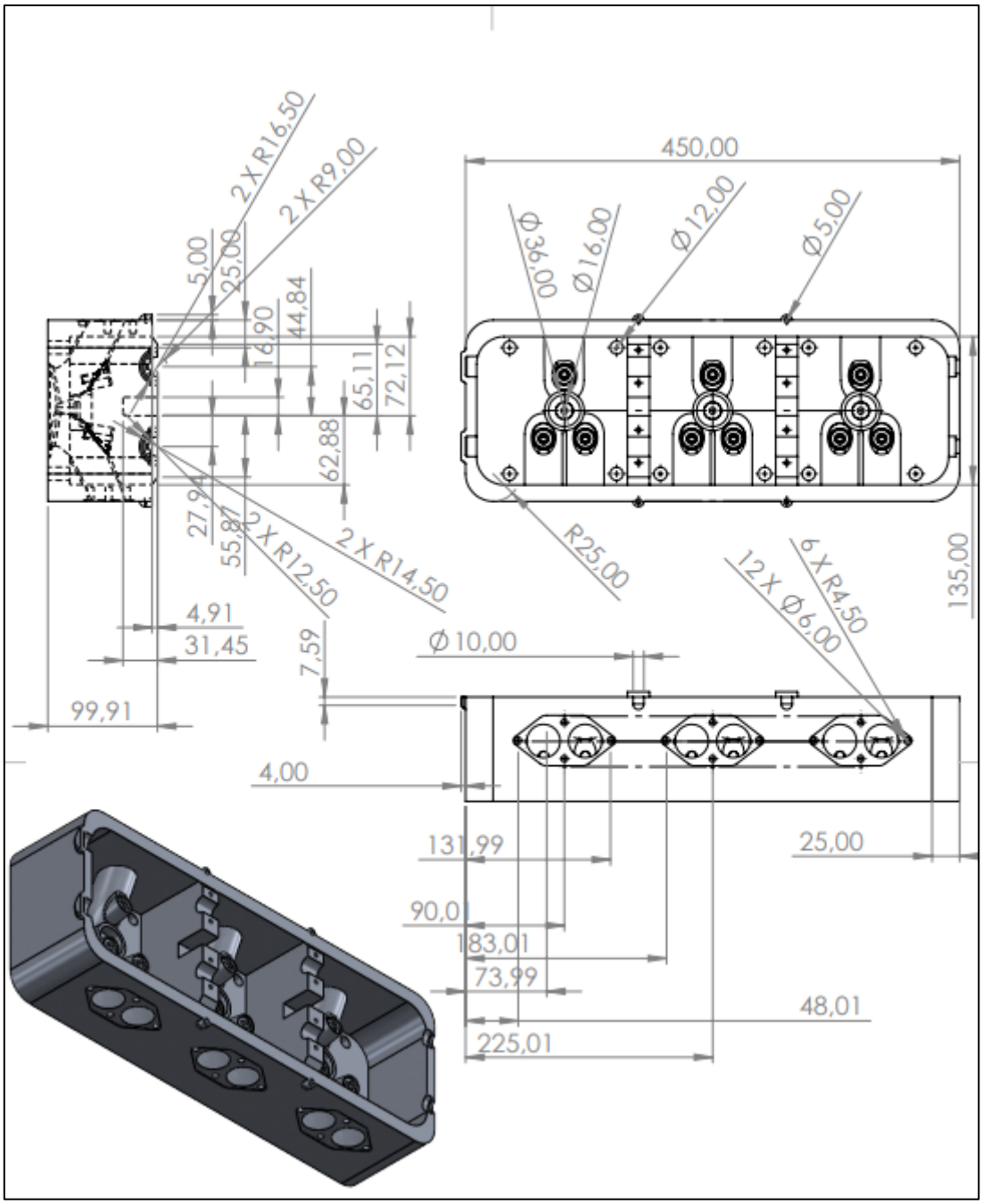

Figure 107: Technical drawing of cylinder head

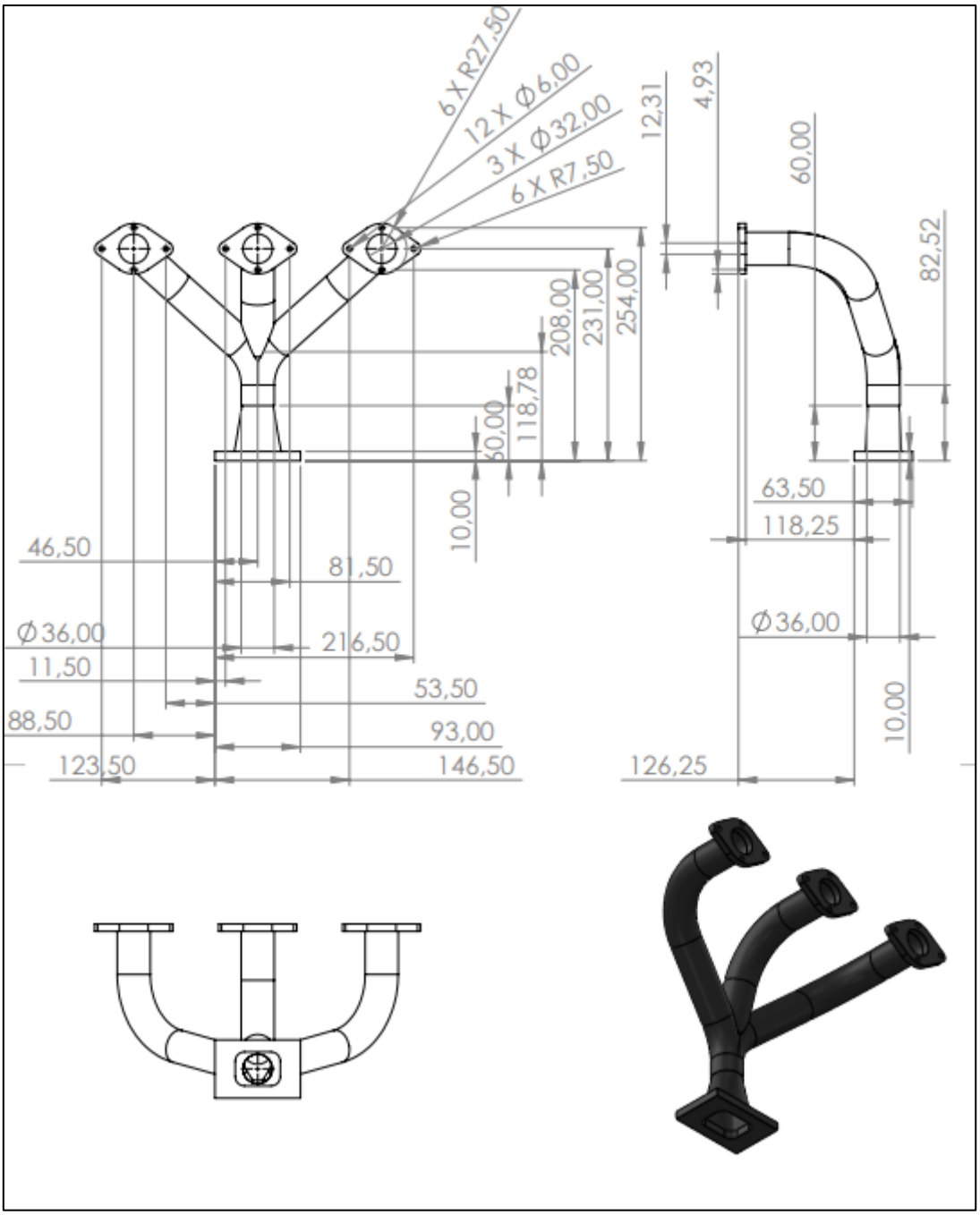

Figure 108: Technical drawing of exhaust manifold

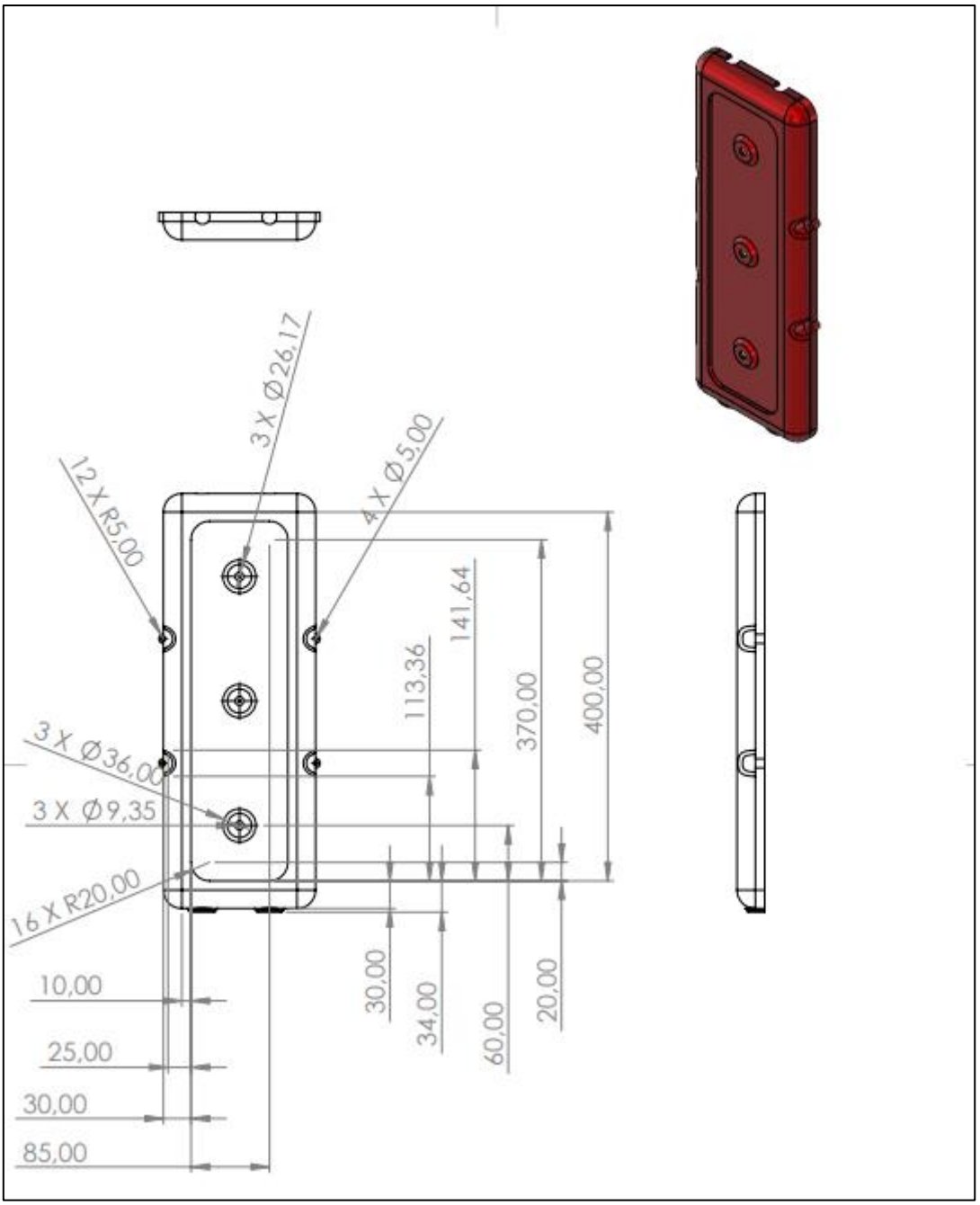

Figure 109: Technical drawing of headcover

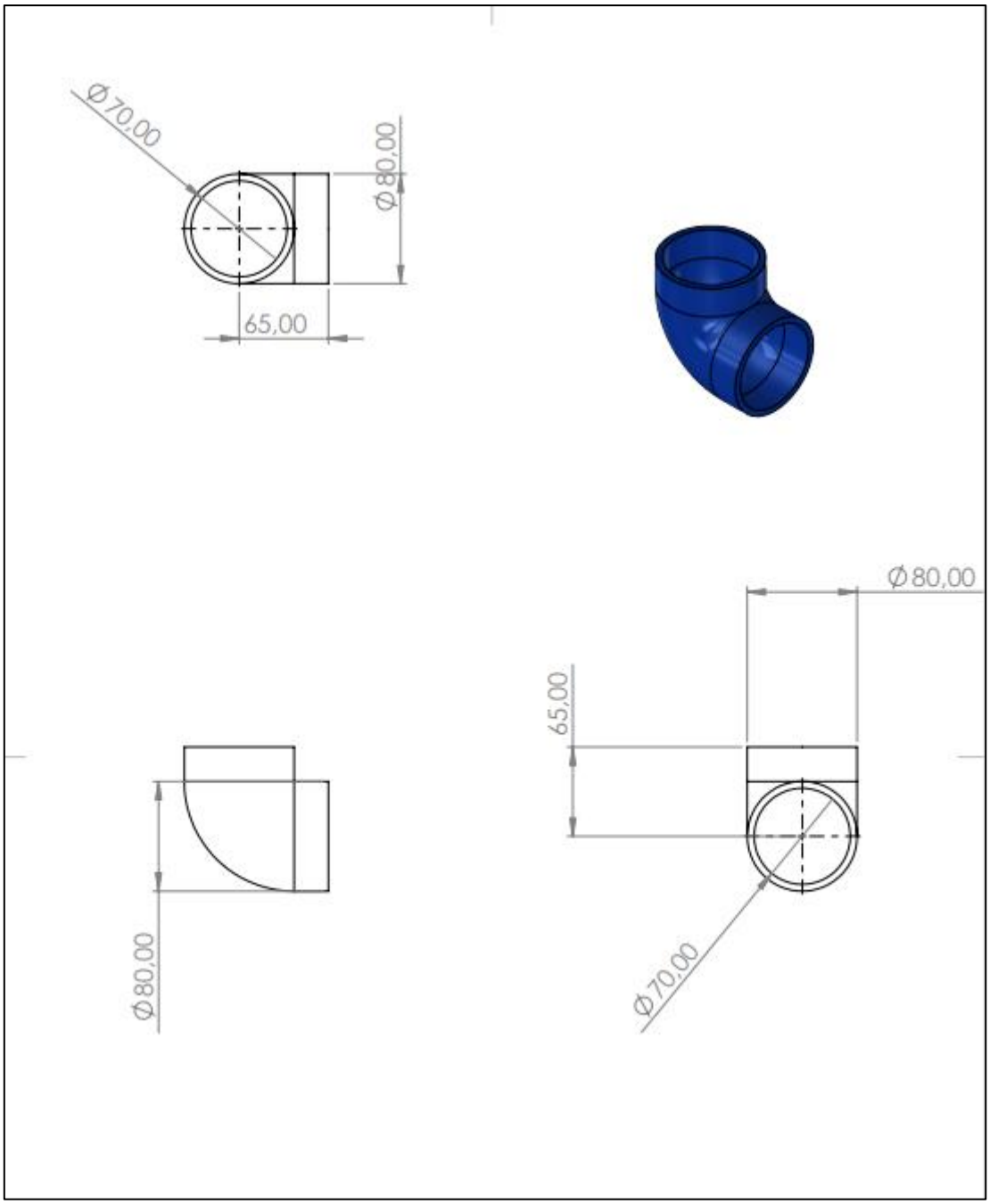

Figure 110: Technical drawing of pipe 1

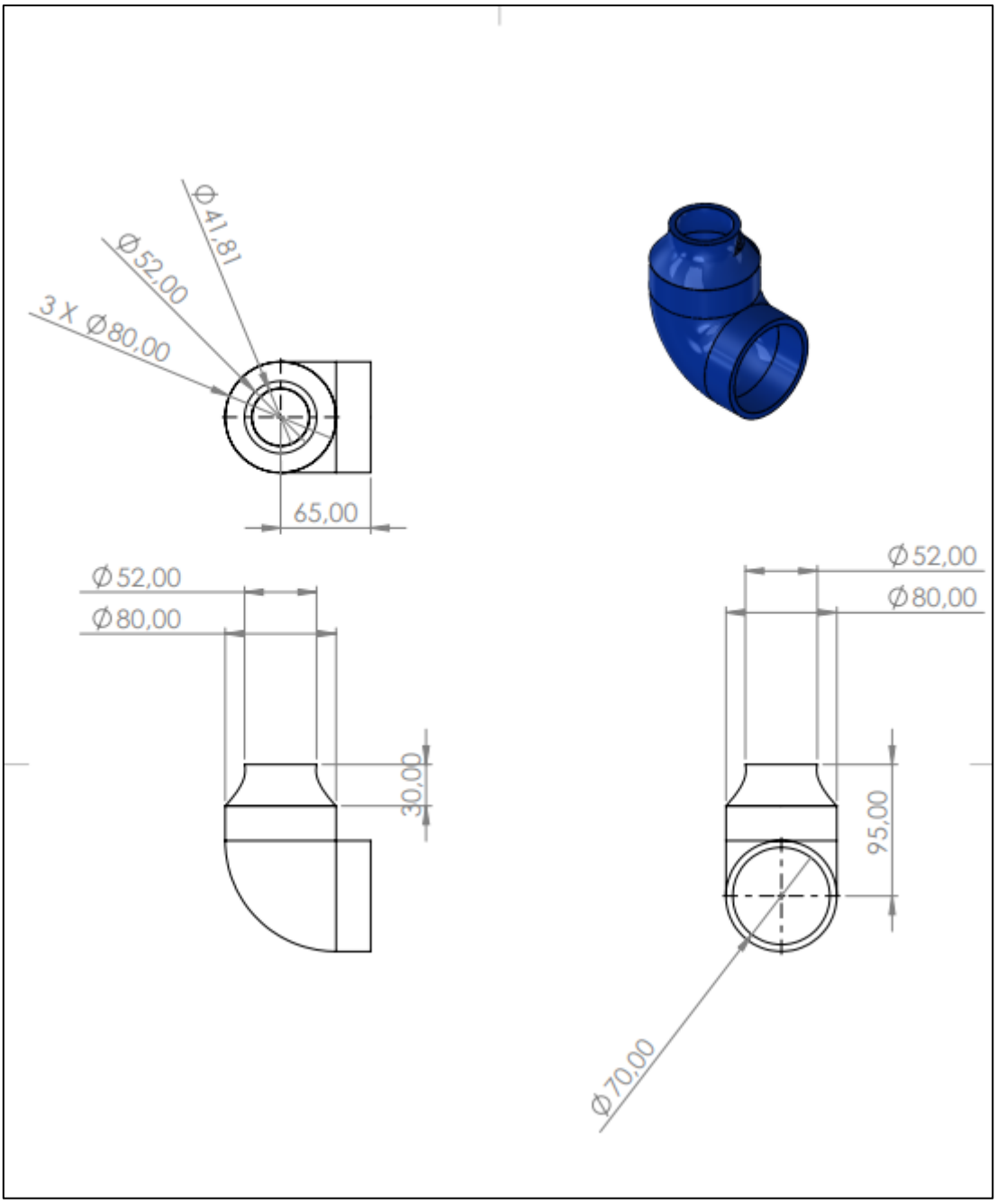

Figure 111: Technical drawing of pipe 2

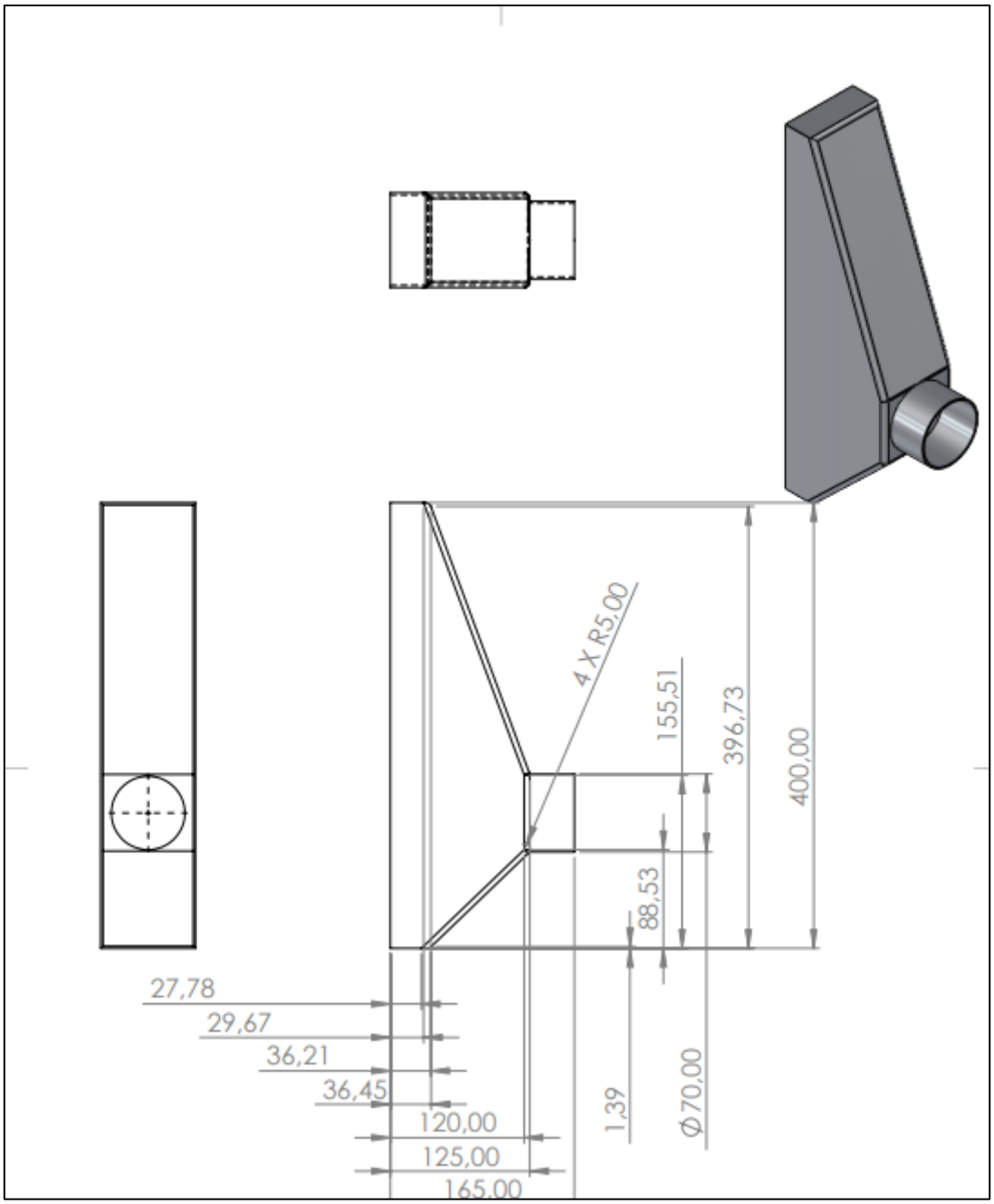

Figure 112: Technical drawing of intercooler

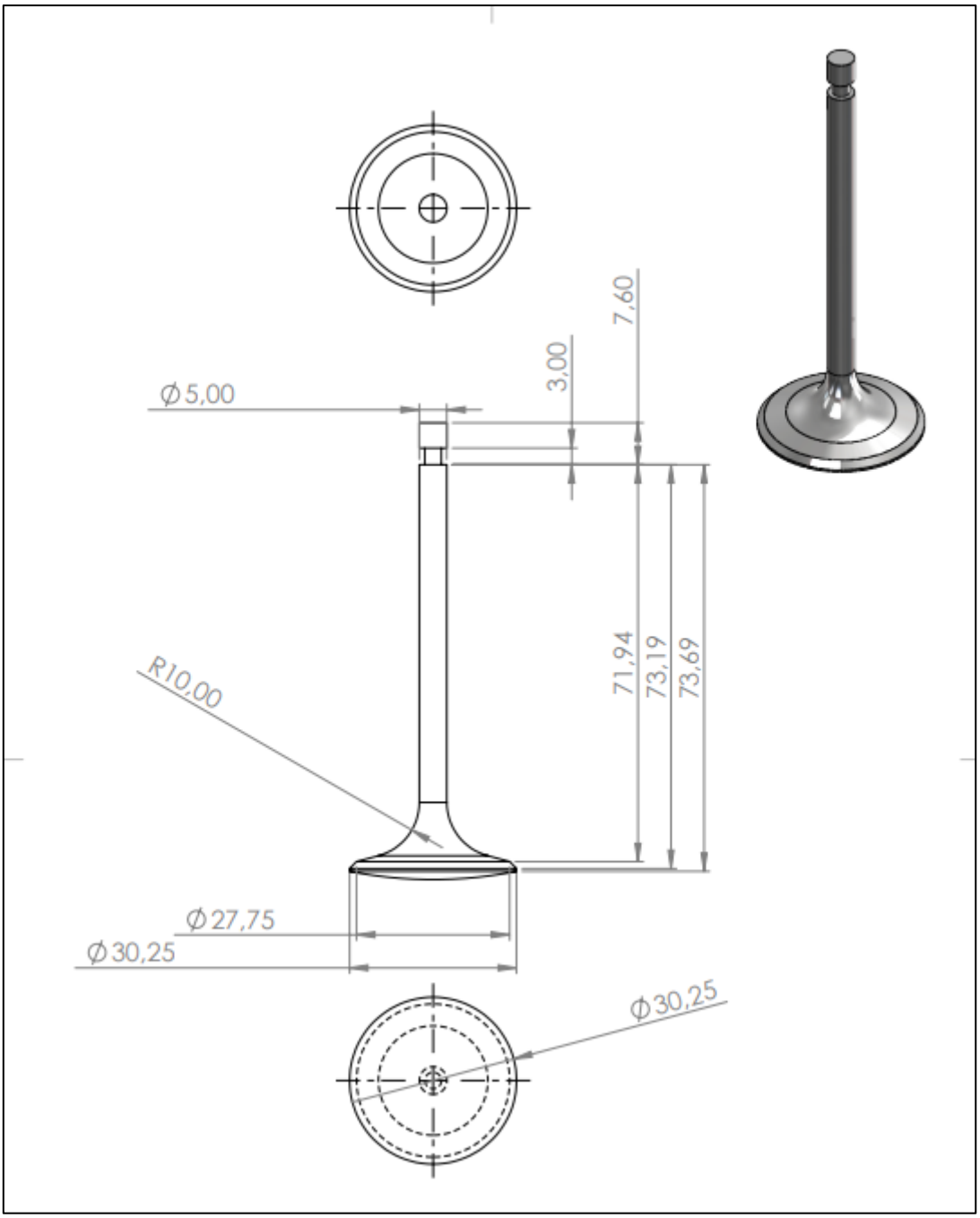

Figure 113: Technical drawing of intake valve

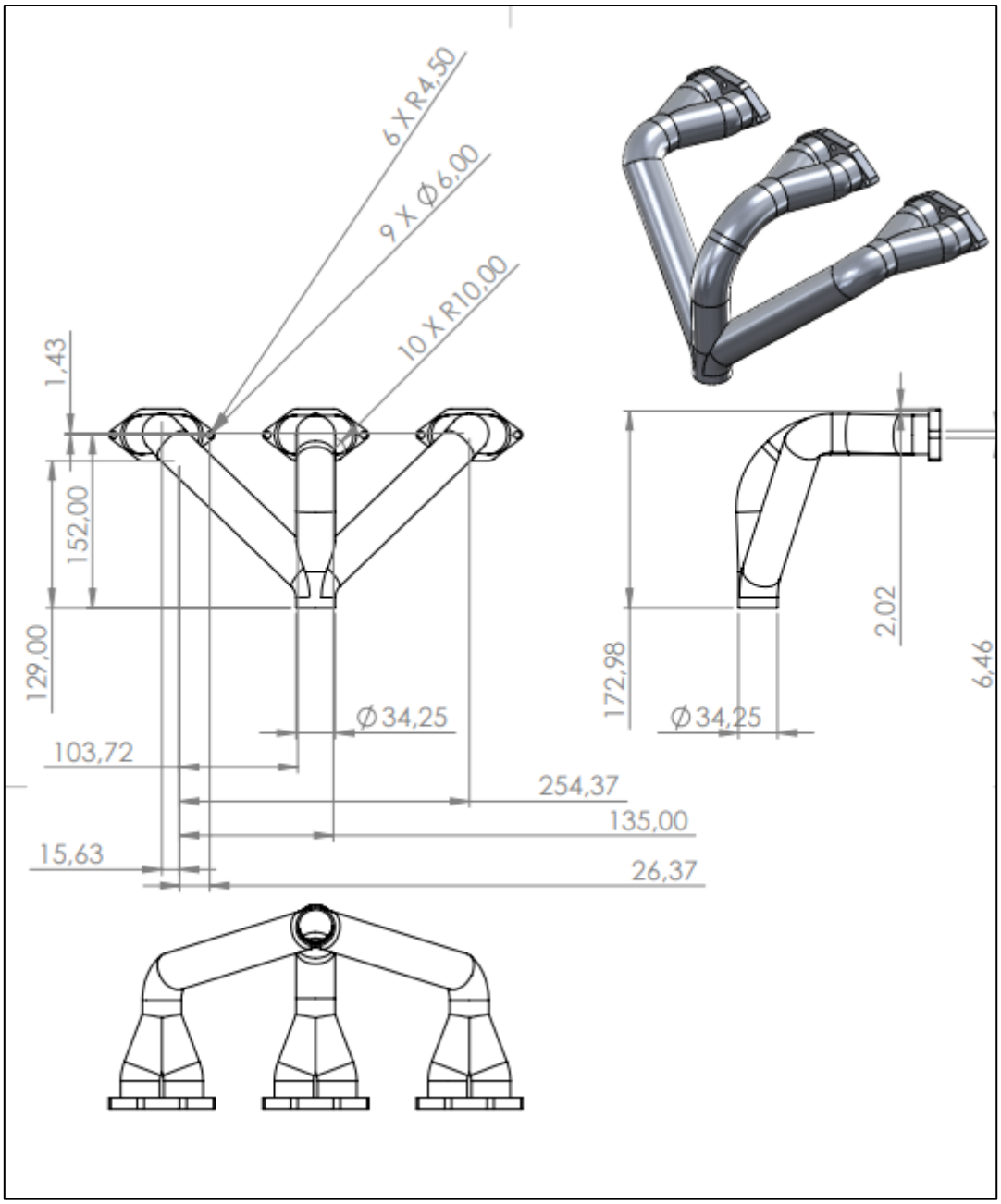

Figure 114: Technical drawing of intake manifold

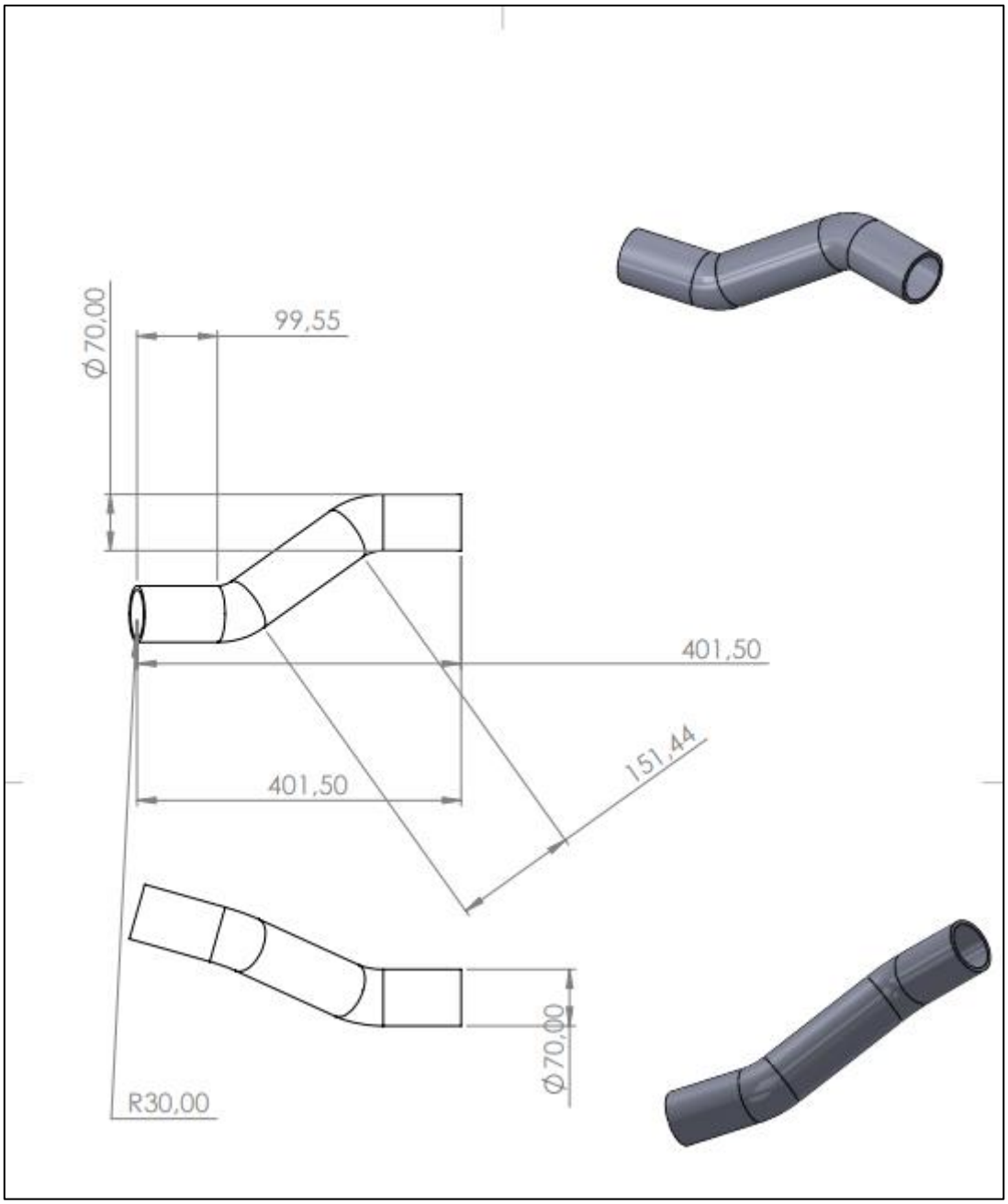

Figure 115: Technical drawing of intake to interpipe

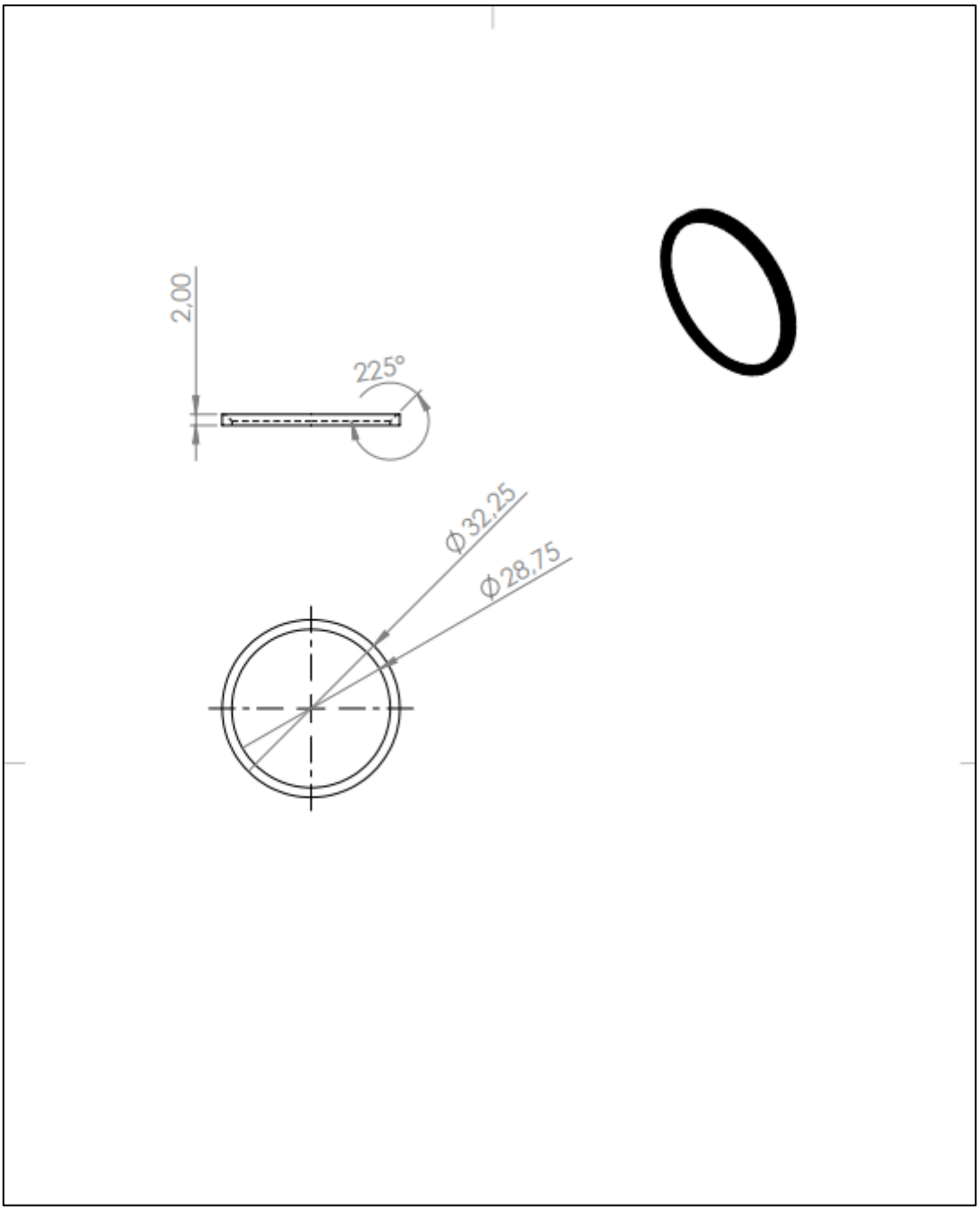

Figure 116: Technical drawing of intake valve seat

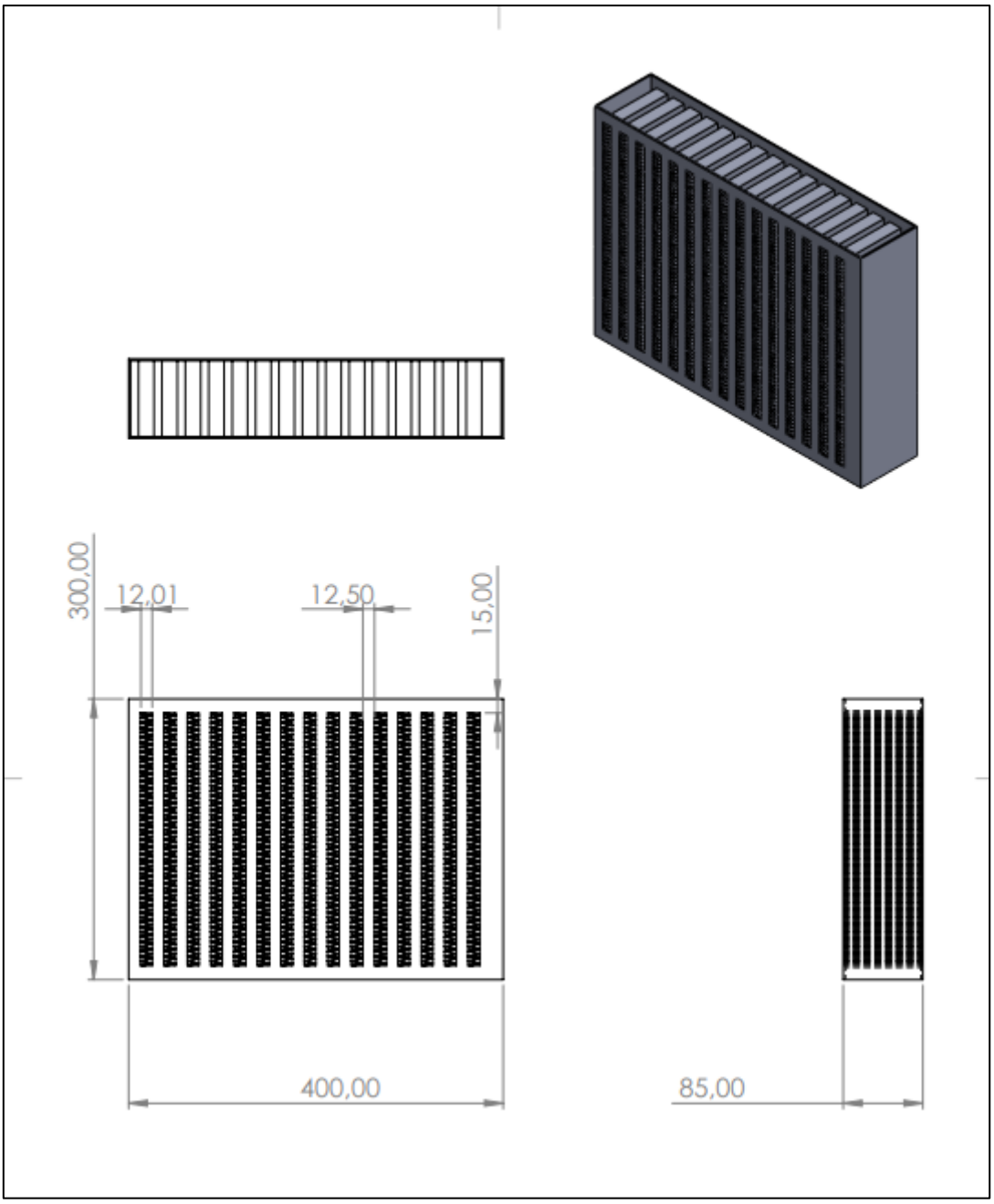

Figure 117: Technical drawing of intercooler center

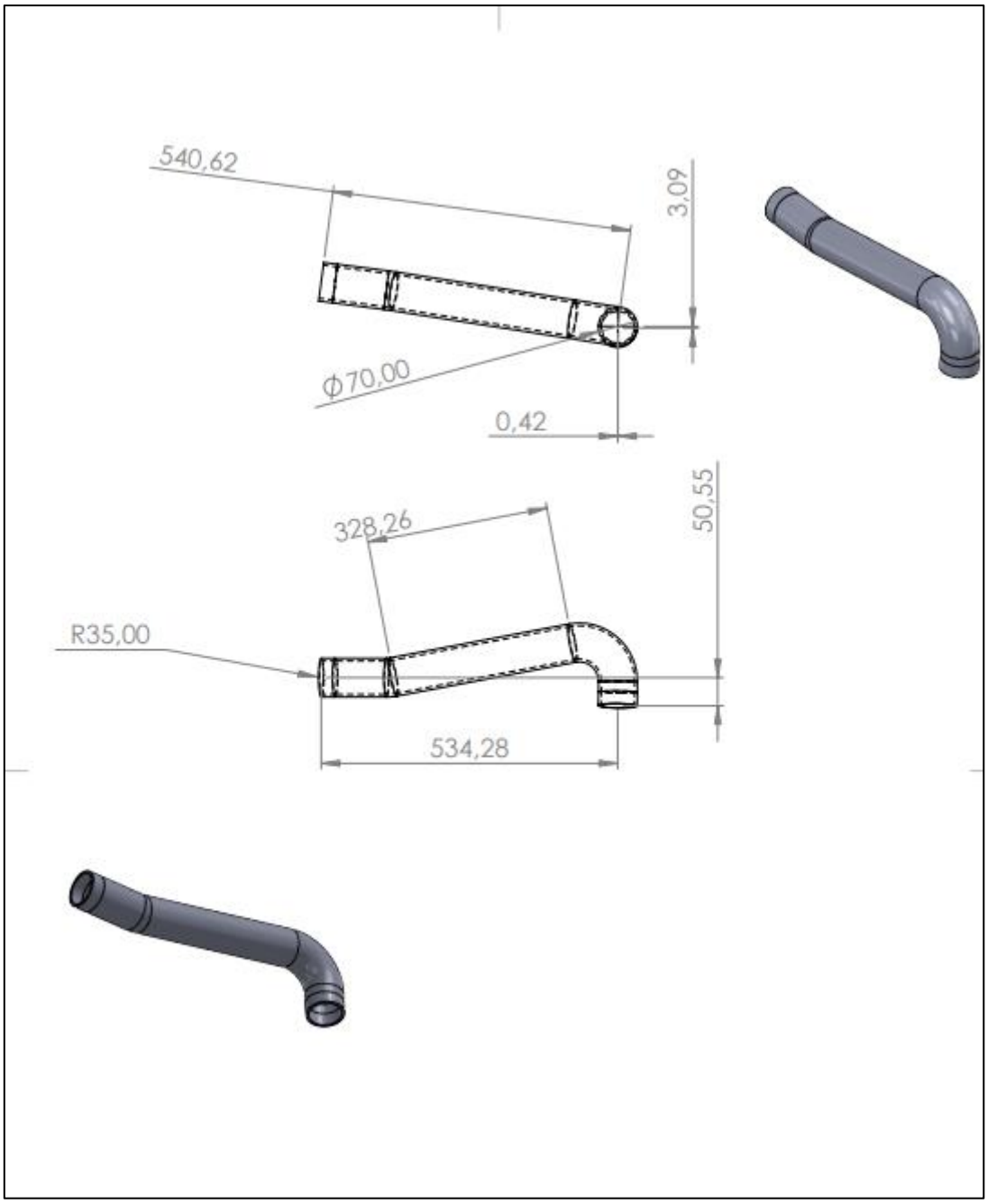

Figure 118: Technical drawing of inter to turbo pipe

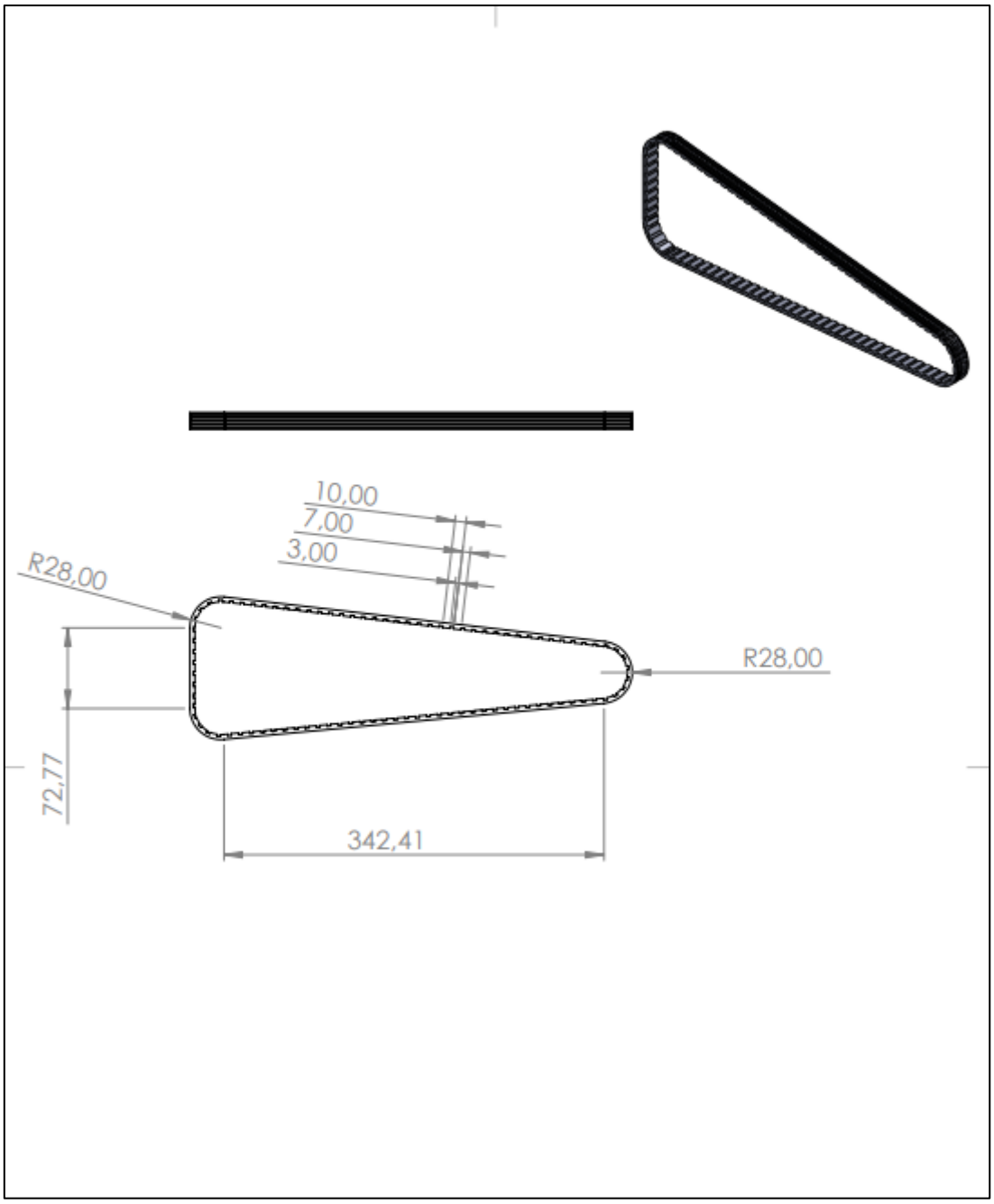

Figure 119: Technical drawing of belt 1

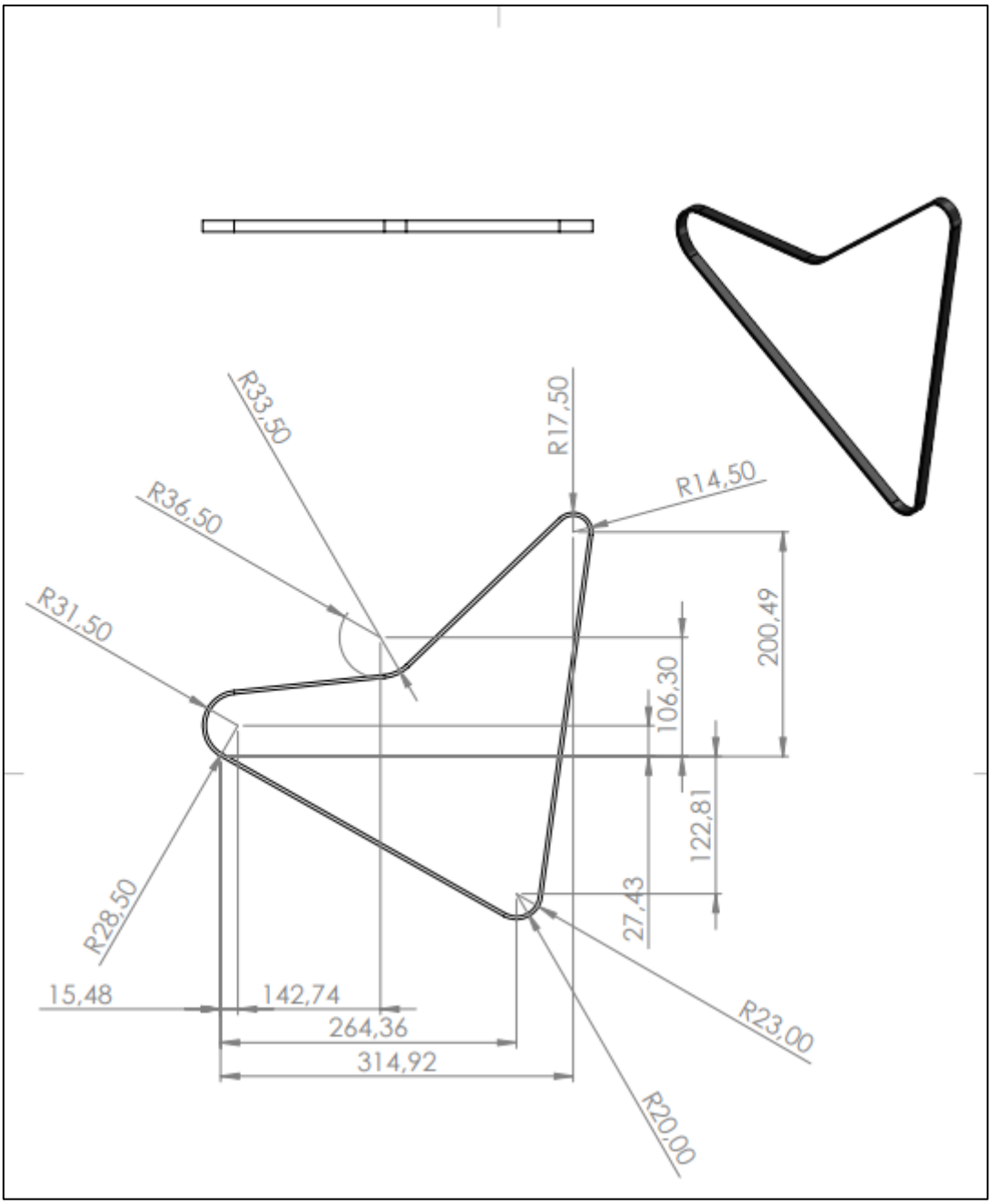

Figure 120: Technical drawing of belt 2

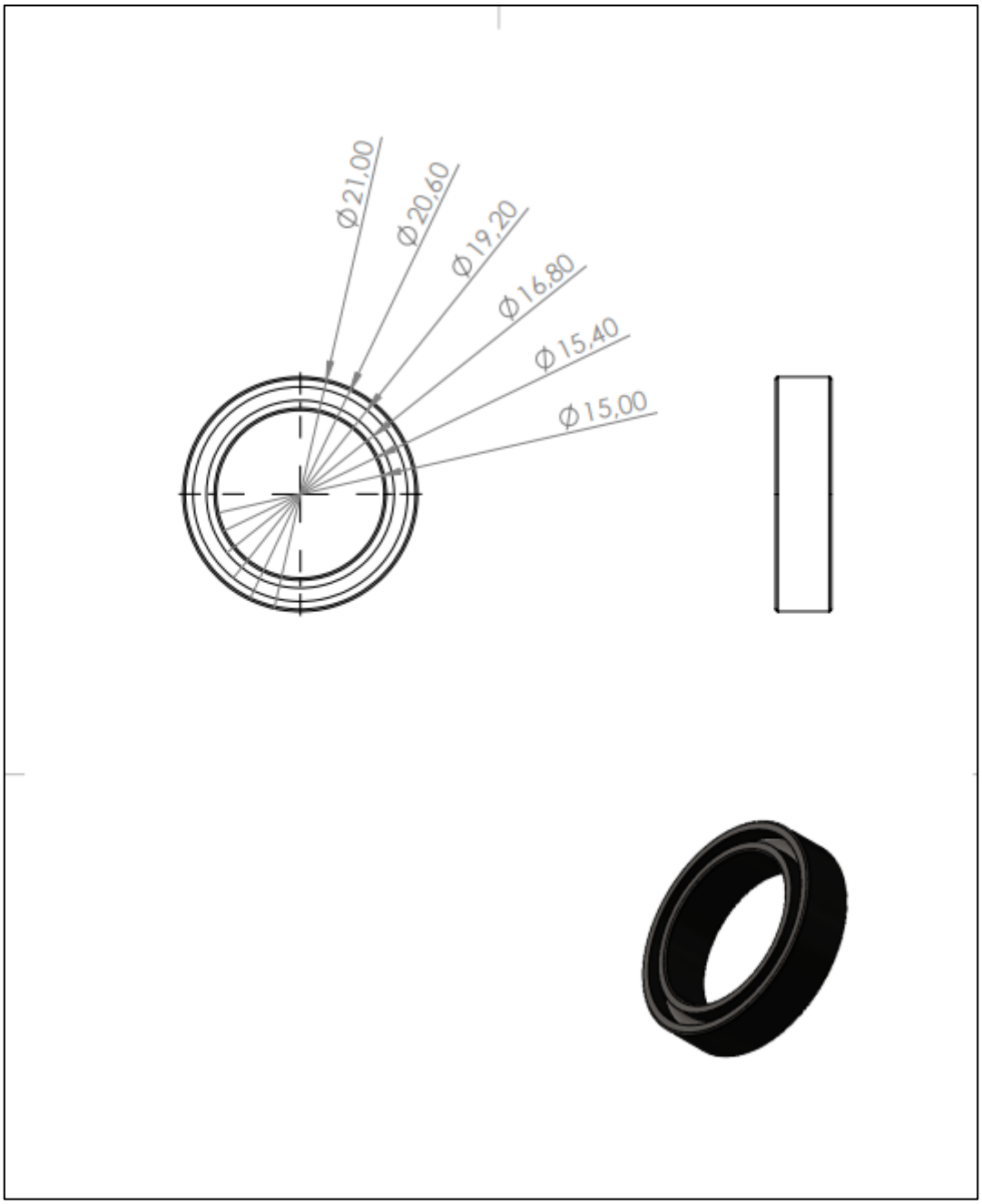

Figure 121: Technical drawing of radial ball bearing

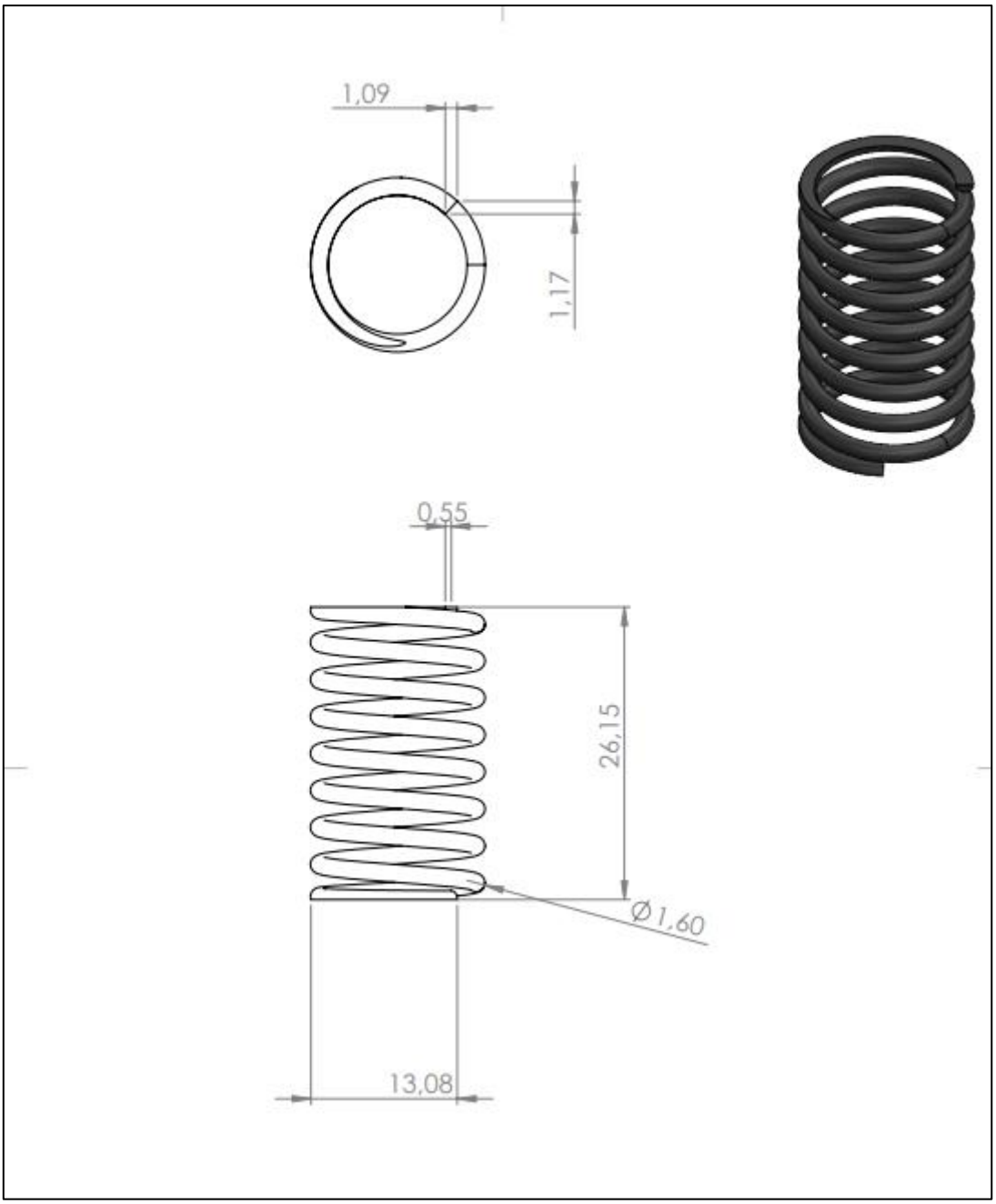

Figure 122: Technical drawing of spring

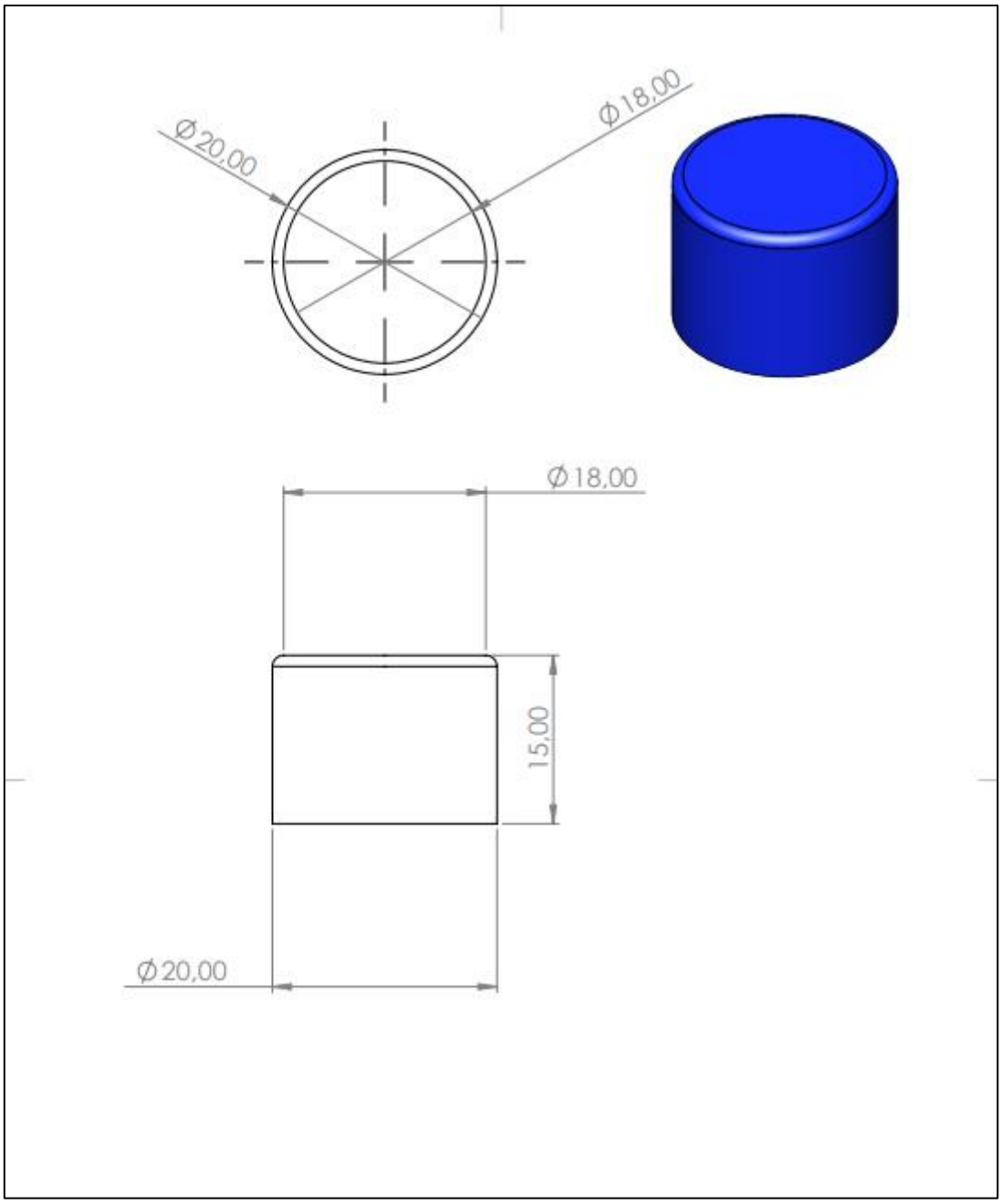

Figure 123: Technical drawing of tappet

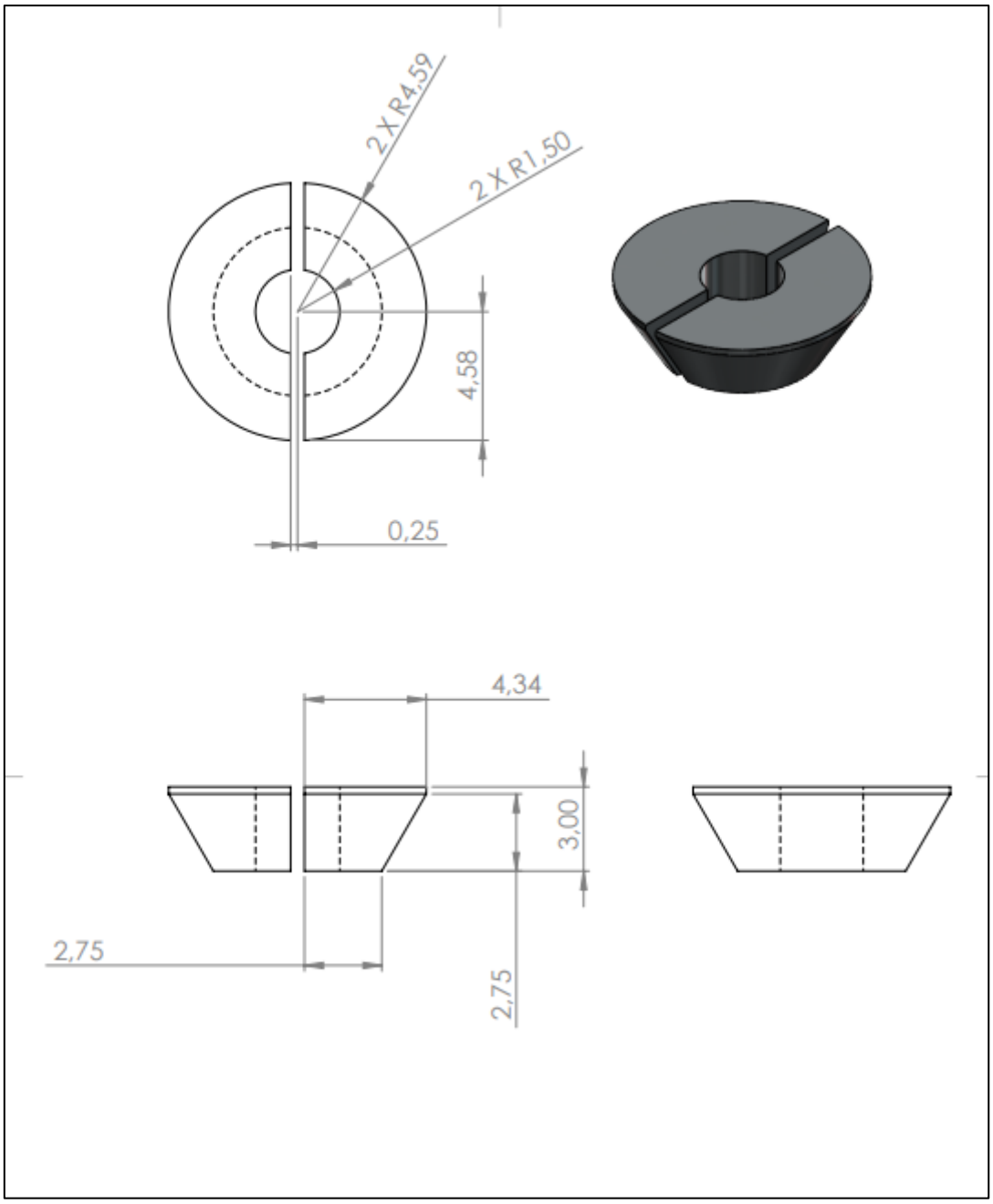

Figure 124: Technical drawing of valve lock

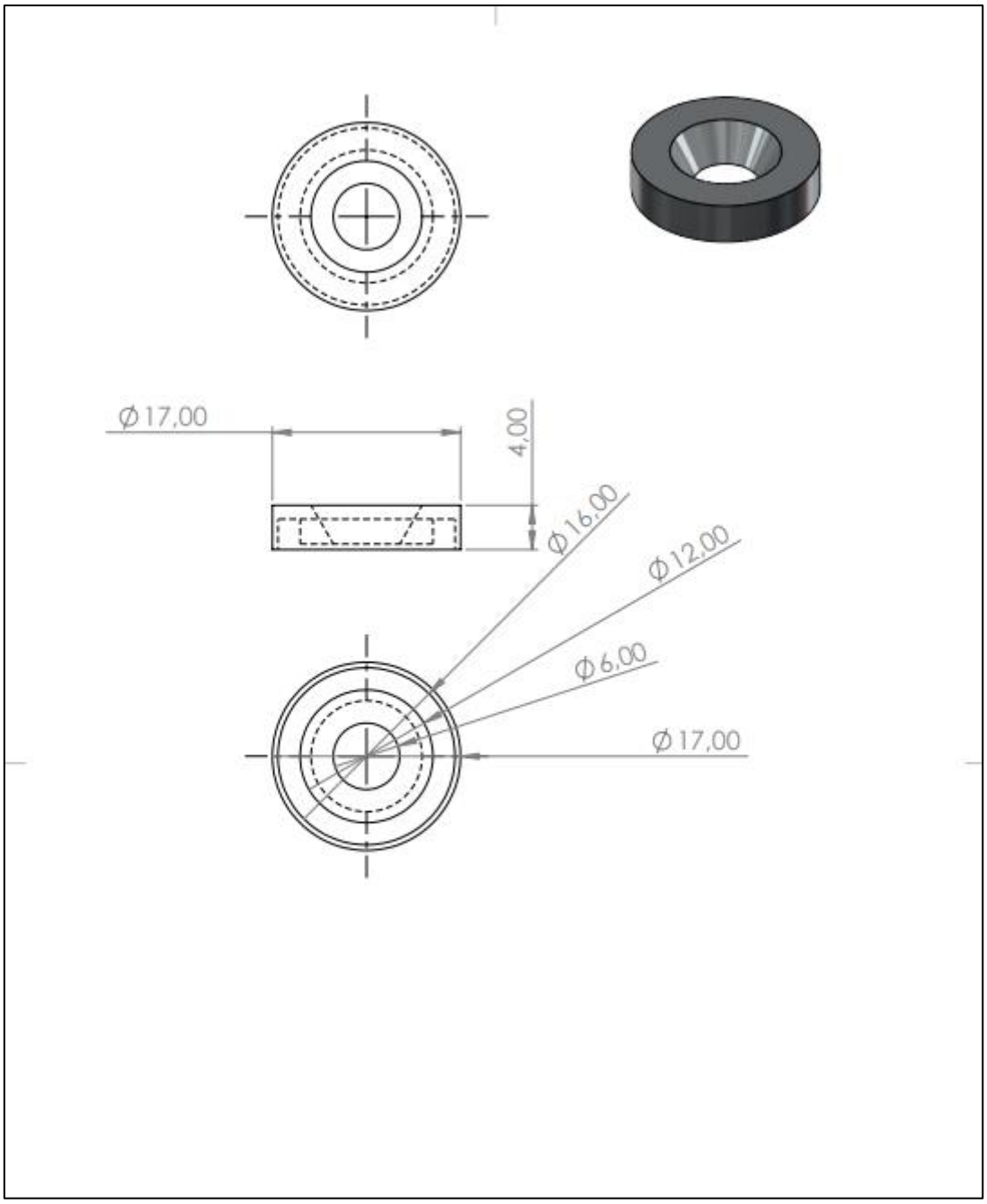

Figure 125: Technical drawing of valve retainer

Figure 126:Cylinder head bottom side geometry

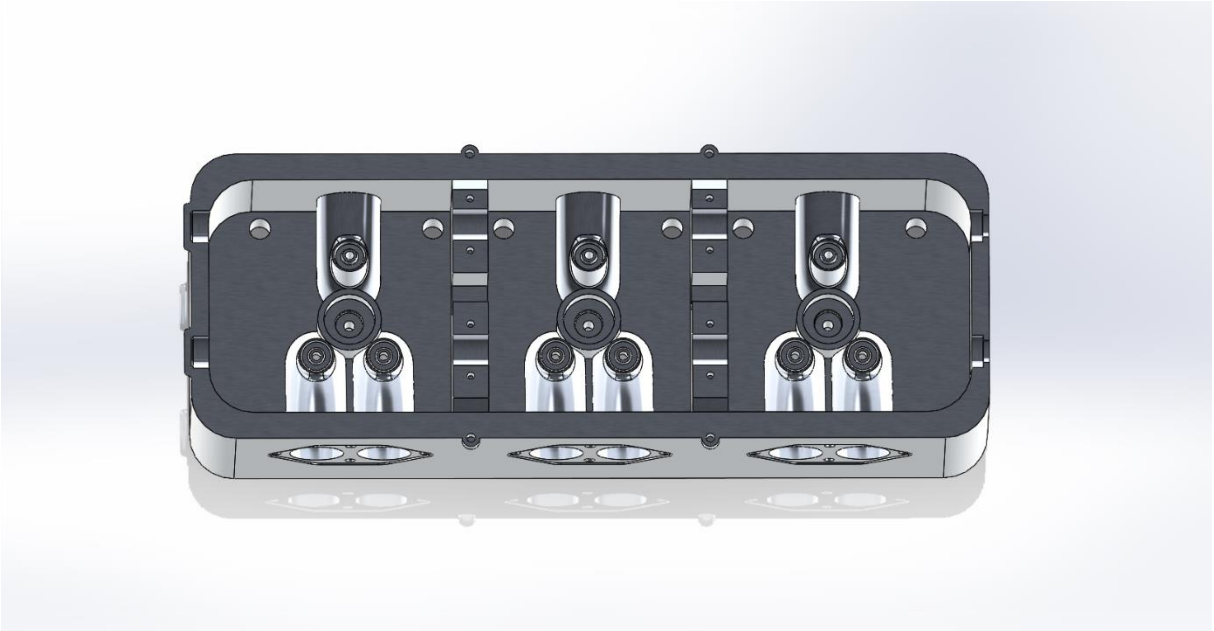

Figure 127:Cylinder head top side geometry

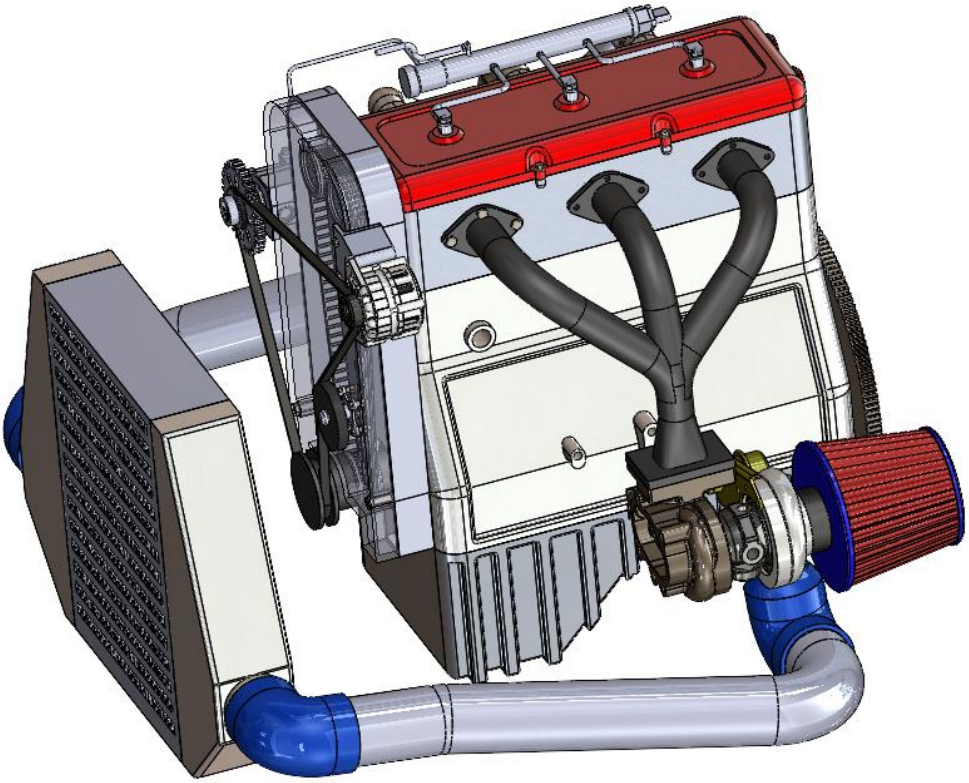

Figure 128: Engine assembly left-front side

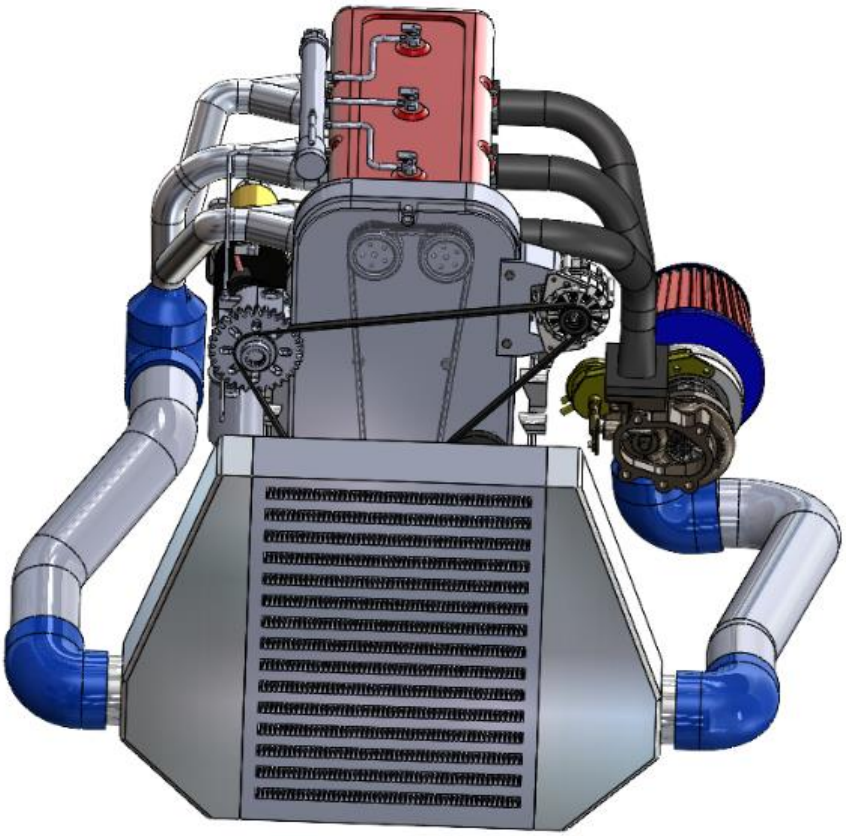

Figure 129: Engine assembly from front side

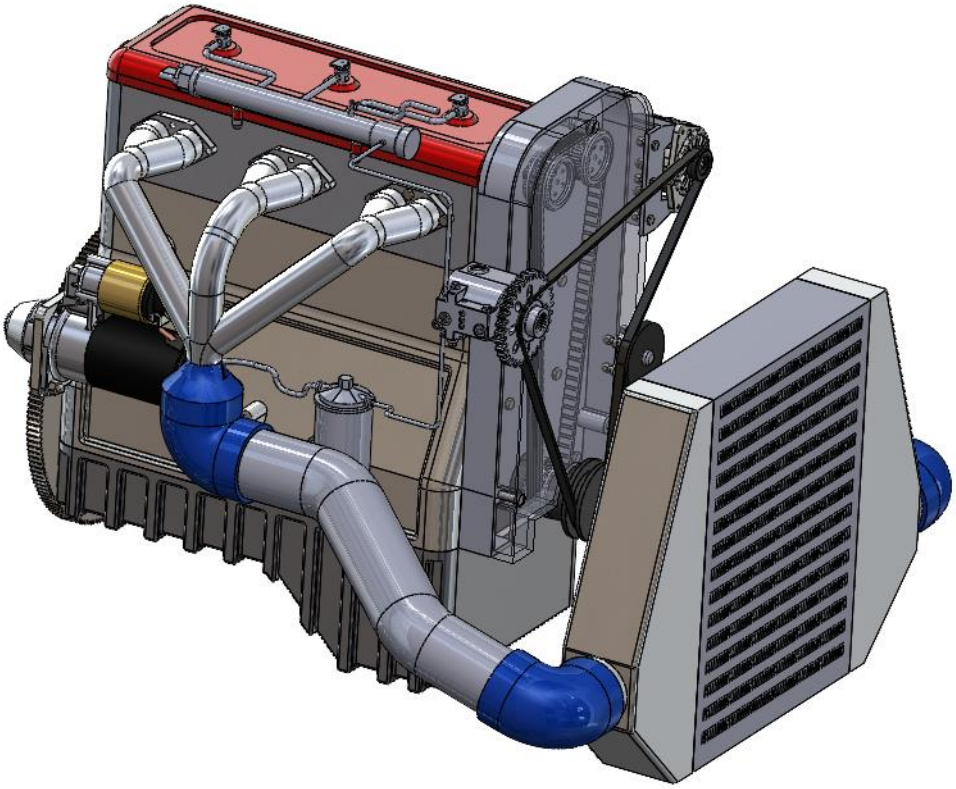

Figure 130: Engine assembly from right side

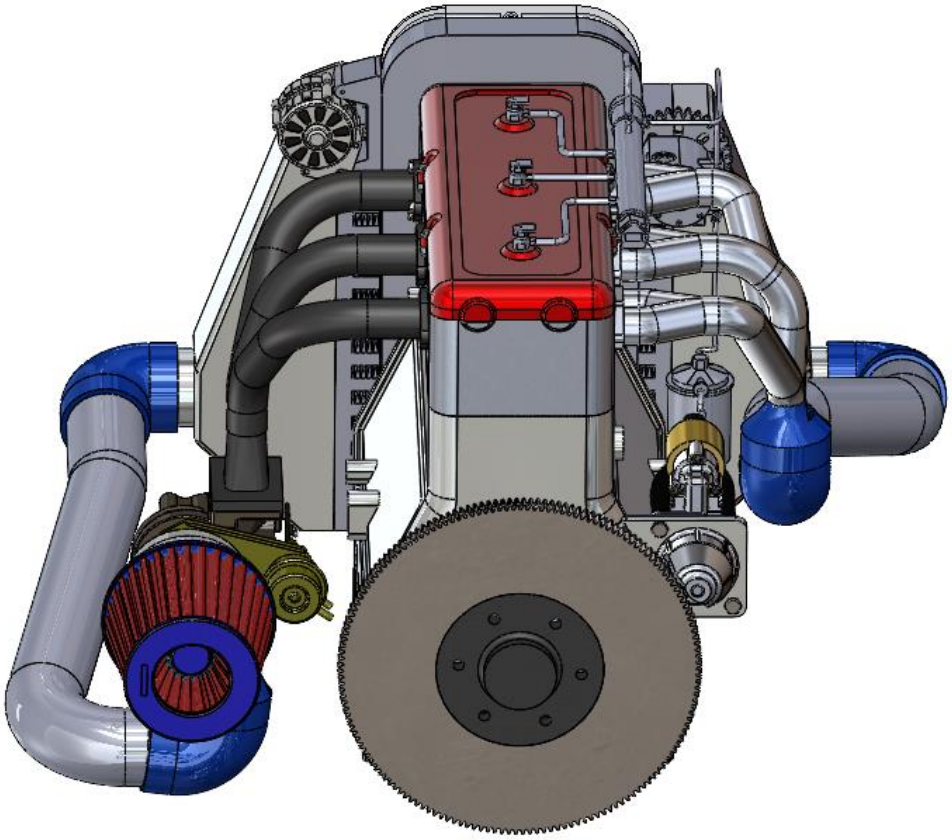

Figure 131: Engine assembly from back side

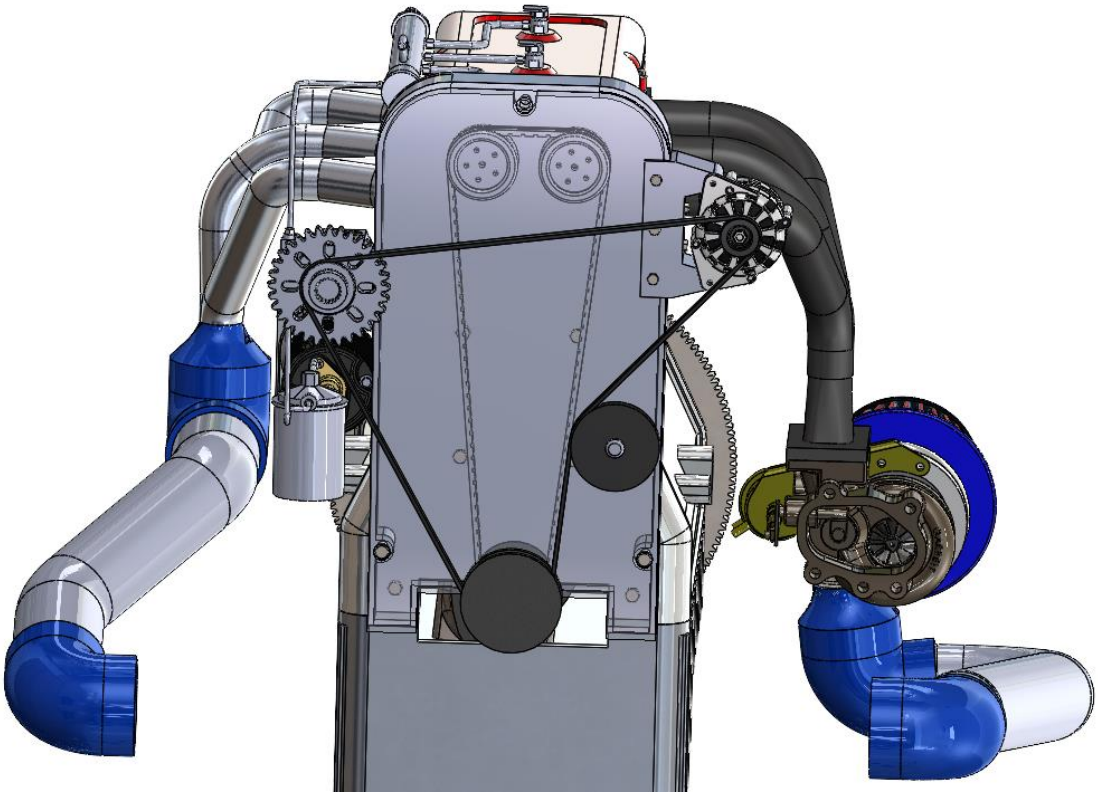

Figure 132:Belt Mechanism

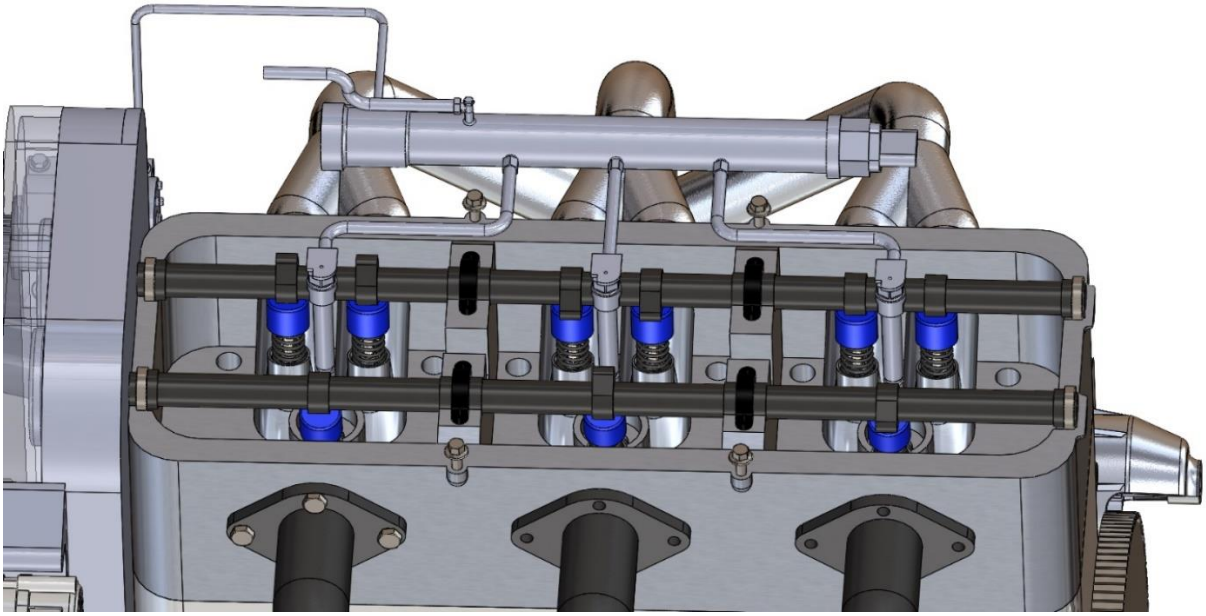

Figure 133: Cylinder head design

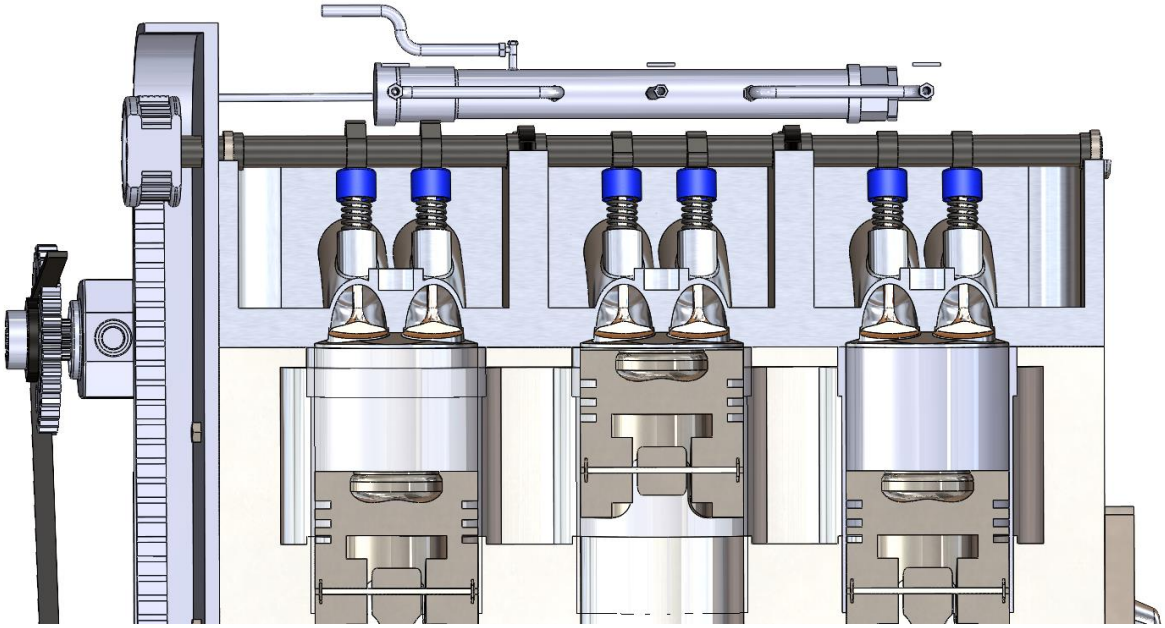

Figure 134: Section view of the combustion chamber

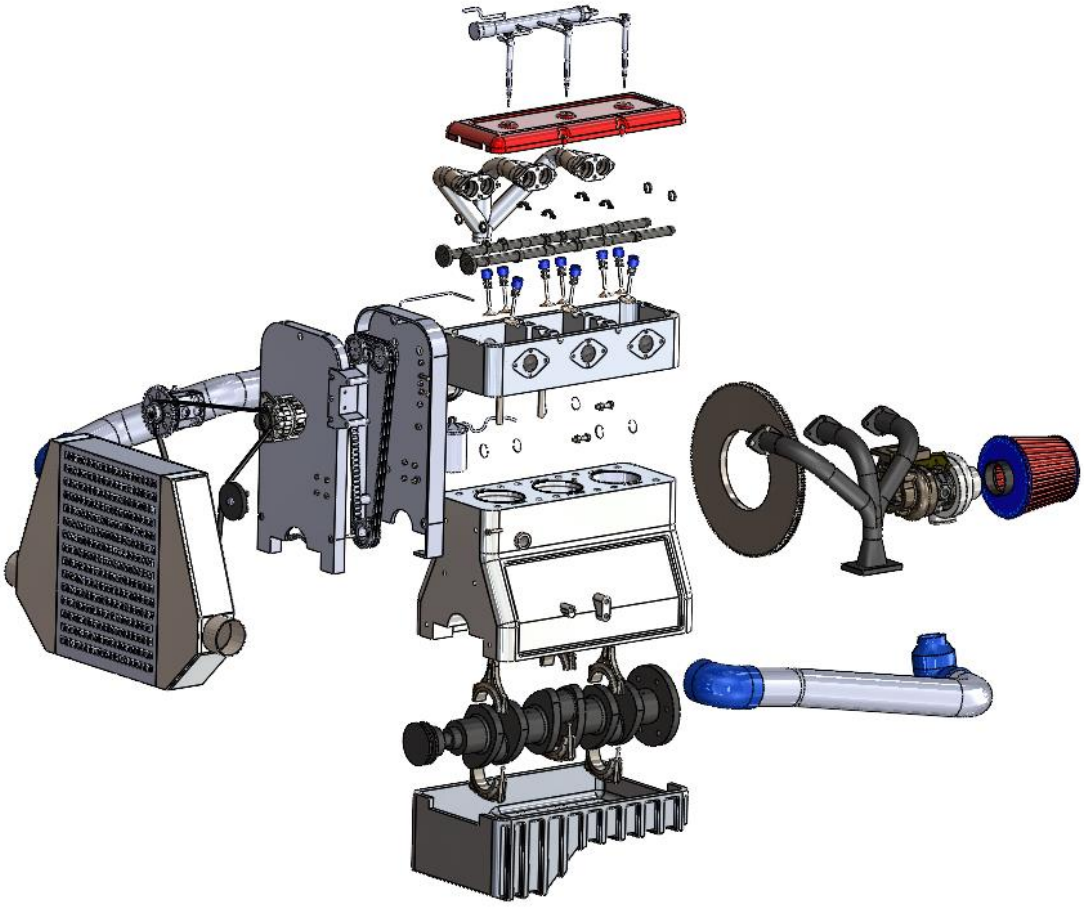

Figure 135:Exploded view 1

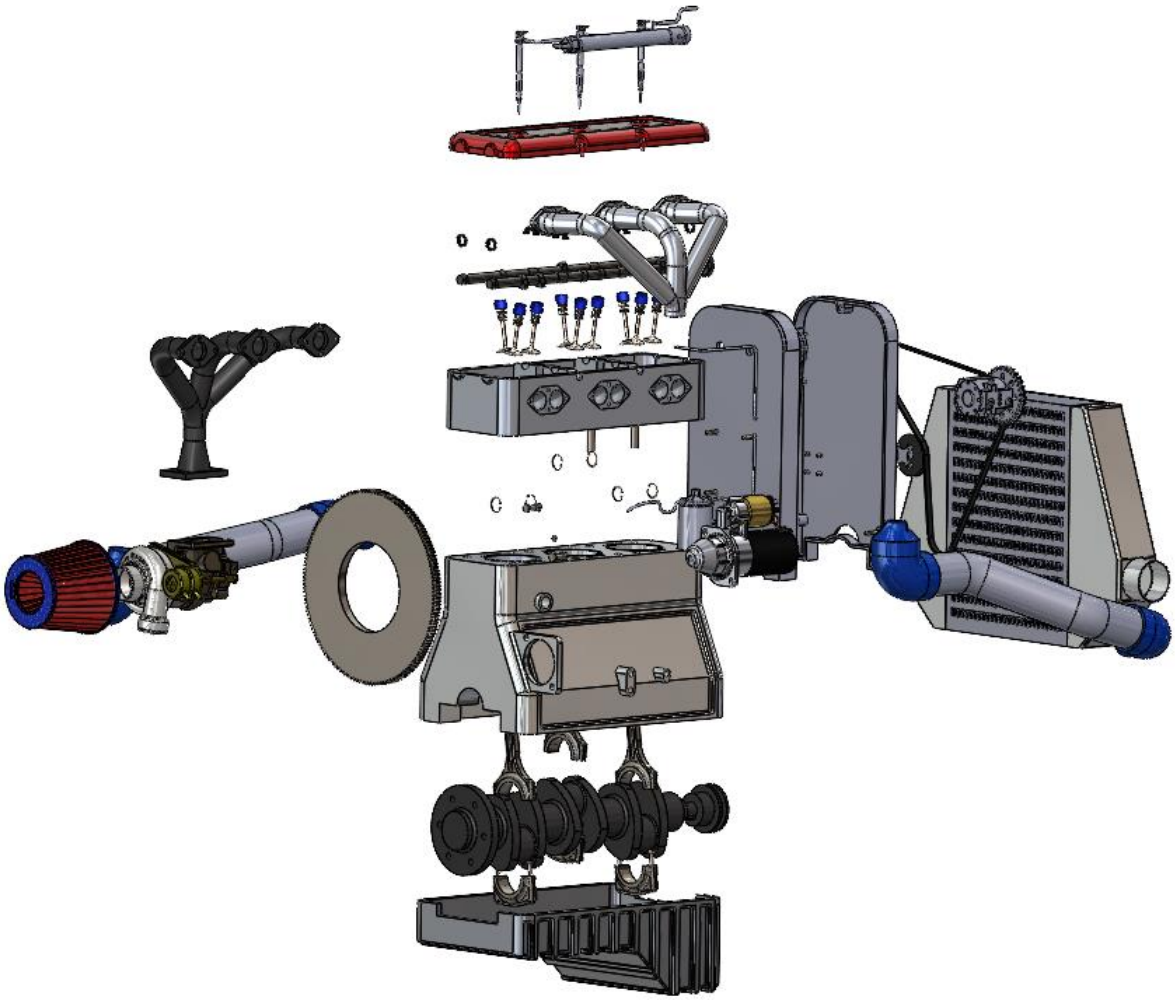

Figure 136:Exploded view 2

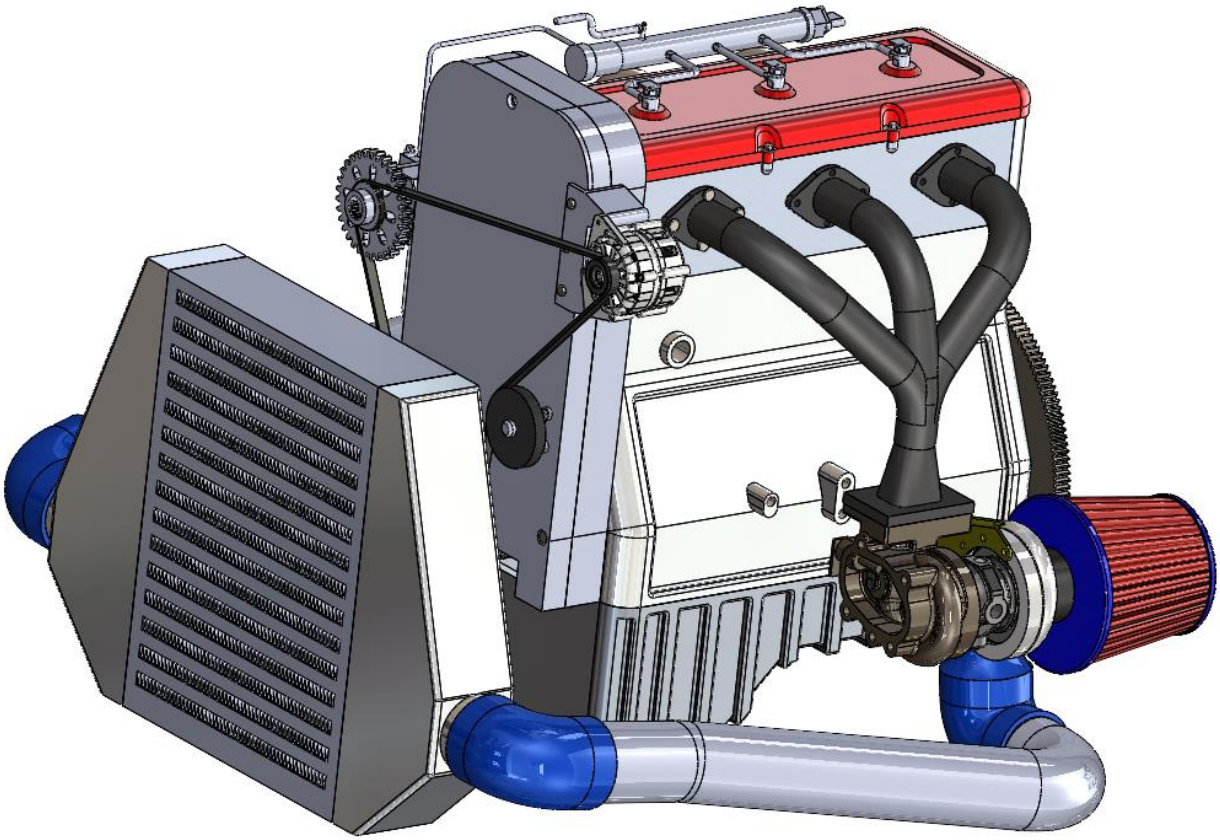

Figure 137:Engine assembly view

9. REFERENCES

- Adamyan, V. M., & Sushko, M. Y. (2013). *Introduction to mathematical physics: Calculus of variations and boundary-value problems*. arXiv. https://arxiv.org/abs/1306.0358
- Afyon Kocatepe Üniversitesi. (2018). *Dizel motorlarda turbo yağlama sistemleri*.
- Anderson, J. D. (2004). *Modern compressible flow: With historical perspective* (3rd ed.). McGraw-Hill Education.
- Aris, R. (1962). *Vectors, tensors, and the basic equations of fluid mechanics*. Dover Publications.
- Batchelor, G. K. (1967). *An introduction to fluid dynamics*. Cambridge University Press.
- Bird, R. B., Stewart, W. E., & Lightfoot, E. N. (2007). *Transport phenomena* (2nd ed.). Wiley.
- Borgnakke, C., & Sonntag, R. E. (2017). *Fundamentals of thermodynamics* (8th ed.). Wiley.
- Bosch GmbH. (2000). *Diesel-engine management: Systems and components*. Robert Bosch GmbH, Automotive Handbook Series.
- Bosch GmbH. (2020). *Gasoline engine management* (6th ed.).
- Britannica. (2024). *Diesel engine*. https://www.britannica.com/technology/diesel-engine
- Callen, H. B. (1985). *Thermodynamics and an introduction to thermostatistics* (2nd ed.). Wiley.
- Çelik, A., Duran, H., & Erdemir, M. (2022). Altı zamanlı pistonlu içten yanmalı motorlar: Tasarım ve termodinamik analiz. *DergiPark*.
- Çengel, Y. A., & Boles, M. A. (2014). *Thermodynamics: An engineering approach* (7th ed.). McGraw-Hill Education.
- Childress, S. (2008). *An introduction to theoretical fluid dynamics*. American Mathematical Society.

- Chorin, A. J., & Marsden, J. E. (1993). *A mathematical introduction to fluid mechanics* (3rd ed.). Springer.
- Cummins Inc. (2023). *Turbocharging systems guide*.
- Davidson, P. A. (2004). *Turbulence: An introduction for scientists and engineers*. Oxford University Press.
- Denso Corporation. (2018). *Fuel injection system technical guide*.
- Douglas, J. F., Gasiorek, J. M., & Swaffield, J. A. (2001). *Fluid mechanics* (4th ed.). Pearson Education.
- Düzce Üniversitesi. (2019). *Turboşarj hızı ve motor performansı*.
- Elektrikport. (2023). İçten yanmalı motorlar serisi – Bölüm 1. https://www.elektrikport.com
- FenderBender. (2010). *Turbocharging and emissions compatibility in modern diesels*.
- Feneley, A., Tang, H., & Zhao, H. (2017). Variable geometry turbochargers. *Renewable & Sustainable Energy Reviews*, *75*, 1324–1341.
- Heywood, J. B. (1988). *Internal combustion engine fundamentals*. McGraw-Hill Education.
- Kozirakis, E., & Henein, N. (2016). Valve train layout comparison. *SAE Technical Paper*. https://doi.org/10.4271/2016-01-1116
- Liepmann, H. W., & Roshko, A. (1957). *Elements of gasdynamics*. Wiley.
- Meyer, R. E. (2000). *Introduction to mathematical fluid dynamics* (2nd ed.). Dover Publications.
- Moran, M. J., & Shapiro, H. N. (2023). *Fundamentals of engineering thermodynamics* (8th ed.). Wiley.
- Muqeem, M., Hasan, M. S., & Parveen, M. (2015). Turbocharging of diesel engine for improving performance and exhaust emissions: A review. *IOSR Journal of Mechanical and Civil Engineering (IOSR-JMCE)*, *12*(4), 1–8.
- Ondokuz Mayıs Üniversitesi. (2021). *Motor tipleri ve sınıflandırılması: Teknik rapor*.
- Panton, R. L. (2013). *Incompressible flow* (4th ed.). Wiley.

- Pope, S. B. (2000). *Turbulent flows*. Cambridge University Press.
- Purdue University. (2023). *ME-200 thermodynamics lecture notes*. School of Mechanical Engineering, West Lafayette.
- Reif, F. (1965). *Fundamentals of statistical and thermal physics*. McGraw-Hill.
- Roodink, T. (2016). Literature review on stabilizing high speed valve train. *ResearchGate*. https://www.researchgate.net/publication/304623064
- SAE International. (2005). *Advances in fuel injection technologies*. *SAE Technical Paper Series*.
- Schlichting, H. (1979). *Boundary-layer theory* (7th ed.). McGraw-Hill.
- ScienceDirect. (2023). *Cylinder head design and function*. Elsevier.
- ScienceDirect. (2023). *Internal combustion engine – Technology overview*. Elsevier.
- Sherman, F. S. (1990). *Viscous flow*. McGraw-Hill.
- Spiegel, M. R. (2009). *Schaum's outline of vector analysis* (2nd ed.). McGraw-Hill Education.
- Techtips INA. (2015). *Valve train components – Technology and failure diagnosis*. INA Technical Guide.
- Toyota Motor Corporation. (2010). *D-4S injection system – Dual injection approach* [Technical bulletin].
- Tritton, D. J. (1977). *Physical fluid dynamics*. Oxford University Press.
- Van Ness, H. C. (1983). *Understanding thermodynamics*. Dover Publications.
- Vickers Engineering. (1916). *Air-blast injection submarine engine designs* [Archived technical report].
- White, F. M. (2006). *Viscous fluid flow* (3rd ed.). McGraw-Hill.
- White, F. M. (2011). *Fluid mechanics* (8th ed.). McGraw-Hill Education.
- Wikipedia. (2025). *Crossflow cylinder head*, *Cylinder head porting*, *Turbo-diesel*, *Variable-geometry turbocharger*, *Electric turbo-compound*. https://www.wikipedia.org
- Wiley. (2021). *Design, modeling, and feasibility analysis of rotary valve mechanisms*.

- Wood, B. D. (2023). *Introduction to engineering mathematics and analysis: Modeling physical systems using the language of mathematics*. arXiv. https://arxiv.org/abs/2301.00001
- Zhang, Q., Yao, M., & Chen, Y. (2013). A review of parallel and series turbocharging. *Proceedings of the Institution of Mechanical Engineers, Part D: Journal of Automobile Engineering*, *227*(4), 489–508.
- Zemansky, M. W., & Dittman, R. H. (1997). *Heat and thermodynamics* (7th ed.). McGraw-Hill.