University of British Columbia
Electrical and Computer Engineering
ELEC291/ELEC292

Project 2: Field Following Robot.

Dr. Jesús Calviño-Fraga P.Eng.
Department of Electrical and Computer Engineering, UBC
Office: KAIS 3024
E-mail: jesusc@ece.ubc.ca
Phone: (604)-827-5387

March 13, 2026

Copyright © 2012-2026, Jesus Calvino-Fraga. Not to be copied, used, or revised without explicit written permission from the copyright owner.

Requirements

- Microcontroller Systems (two needed!):
  - One for the robot. Tracks the wire, avoids obstacles, and receives commands.
  - One for the remote which sends commands to the Robot using infrared light.
- Programmed in C.
- The robot must be battery powered**.**
- Discrete MOSFET drivers.
- Commands transmitted to the robot from the remote:
  - **Stop.**
  - **Forward.**
  - **Backward.**
  - **Turn Left.**
  - **Turn Right.**
  - **Rotate 180º.**
  - **Selection and configuration of paths.**
- Collision avoidance.
- Pre-configured paths.

Copyright © 2012-2026, Jesus Calvino-Fraga. Not to be copied, used, or revised without explicit written permission from the copyright owner.

Microcontrollers Available

Maker	Family	Microcontroller
NXP (now Qualcomm)	ARM	LPC824
ST Microelectronics	ARM	STM32F051
Microchip	PIC32	MX130F064B
Atmel (now Microchip)	AVR	ATMega328P[1]
Texas Instruments	MSP430	MSP430G2553
Nuvoton	8051	N76E003
Silicon Labs	8051	EFM8LB12

[1] This is the same processor used in the Arduino board. Arduino boards, programs, or anything to do with the Arduino environment are not acceptable for this project. If you choose to use this processor it must be programmed in plain 'C' using either GCC or any other available C compiler.

Copyright © 2012-2026, Jesus Calvino-Fraga. Not to be copied, used, or revised without explicit written permission from the copyright owner.

Microcontrollers

- Use two microcontrollers from different families. For example these combinations are acceptable:
  - LPC824 and EFM8LB12 (ARM and 8051)
  - STM32 and PIC32 (ARM and PIC32)
  - AVR and N76E003 (AVR and 8051)
- Similarly, and as an example, these combinations are **not** acceptable:
  - LPC824 and STM32 (both are ARM)
  - EFM8LB12 and N76E003 (both are 8051)
  - PIC32 and PIC32 (both are PIC32)

Copyright © 2012-2026, Jesus Calvino-Fraga. Not to be copied, used, or revised without explicit written permission from the copyright owner.

Simple Track

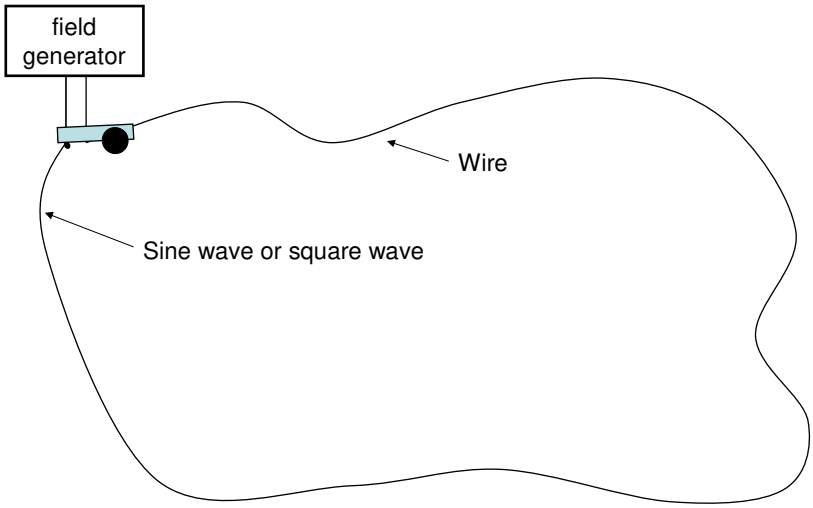

Copyright © 2012-2026, Jesus Calvino-Fraga. Not to be copied, used, or revised without explicit written permission from the copyright owner.

Field Wire Generator

- Injects an AC signal that generates a changing magnetic field.
- Frequency must be fixed.
- You can use the function generator in the lab or make a simple one using a 555 timer.

Copyright © 2012-2026, Jesus Calvino-Fraga. Not to be copied, used, or revised without explicit written permission from the copyright owner.

The Field Detectors in the Robot

- It requires two tank circuits to determine which way to move while following the wire, and one tank circuit to detect intersections:

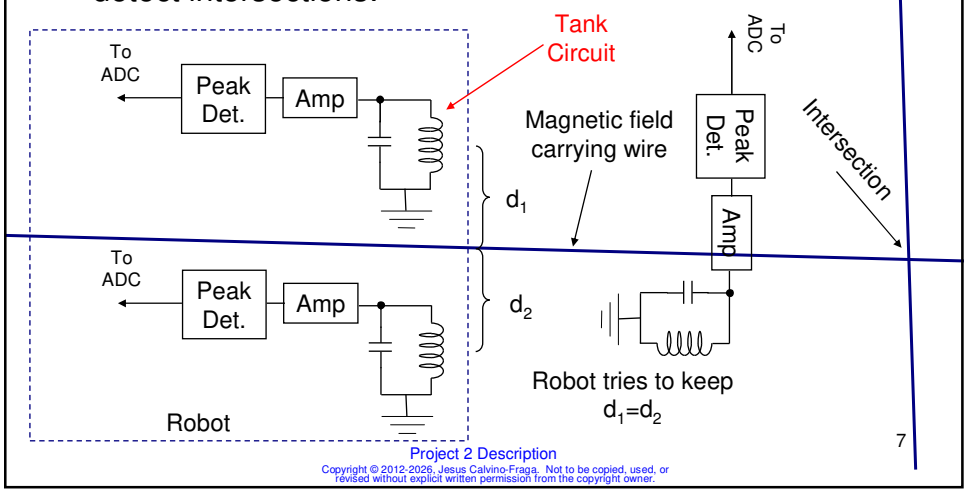

Copyright © 2012-2026, Jesus Calvino-Fraga. Not to be copied, used, or revised without explicit written permission from the copyright owner.

Example Path with Intersection

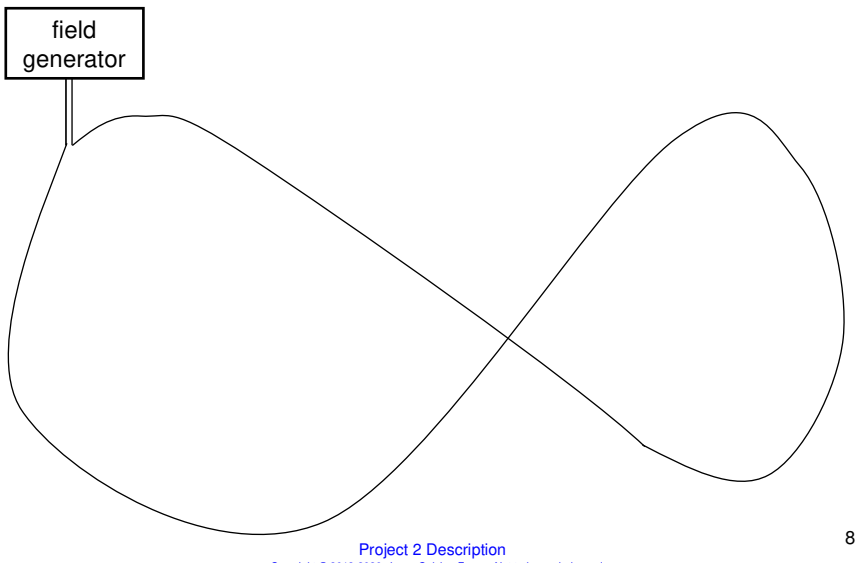

Copyright © 2012-2026, Jesus Calvino-Fraga. Not to be copied, used, or revised without explicit written permission from the copyright owner.

Robot Tracking Logic

- If (d1>d2) move to one side.
- If (d2>d1) move to the other side.
- If (d1≈d2) move straight.
- If intersection detected: move straight, left, or right according to pre-programmed route.

Copyright © 2012-2026, Jesus Calvino-Fraga. Not to be copied, used, or revised without explicit written permission from the copyright owner.

Pre-Configured Paths

Intersection	Path 1	Path 2	Path 3
1	Forward	Left	Right
2	Left	Right	Forward
3	Left	Left	Right
4	Forward	Right	Left
5	Right	Forward	Right
6	Left	Forward	Left
7	Right	Stop	Forward
8	Stop		Stop

Copyright © 2012-2026, Jesus Calvino-Fraga. Not to be copied, used, or revised without explicit written permission from the copyright owner.

Simple Magnetic Field Detector

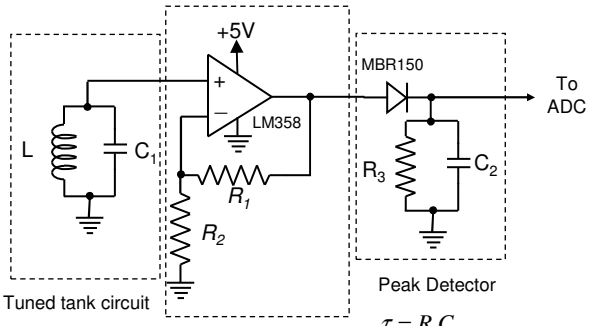

$$f_r = \frac{1}{2\pi\sqrt{LC_1}}$$

$$15kHz < f_r < 17kHz$$

$$A_V = 1 + \frac{R_1}{R_2}$$

$$10 < A_V < 20$$

$$\tau = R_3 C_2$$

$$\tau >> \frac{1}{f_r}$$

$$\frac{k}{f_r} = R_3 C_2$$

$$100 < k < 200$$

Copyright © 2012-2026, Jesus Calvino-Fraga. Not to be copied, used, or revised without explicit written permission from the copyright owner.

Inductors in Project Kit

- Digi-Key part number M8275-ND.
- 1 mH, ±20%, 1A
- Don't drop them: The ferrite core will break!
- Won't work by itself. Needs to be part of a 'tank' circuit.

Copyright © 2012-2026, Jesus Calvino-Fraga. Not to be copied, used, or revised without explicit written permission from the copyright owner.

Infrared Remote

- Transmitter is an Infrared LED. Included in kit: SFH 4546.
- Receiver is the TSOP33338. Also in kit.
- The transmitter must turn on-off the LED at 38kHz for the receiver to detect it. Two options:
  - External oscillator (like the 555 timer). You can turn on-off the 555 timer configured as a A-stable oscillator at 38kHz by applying logic one or logic zero to pin 4.
  - Microcontroller timer ISR. Just output 38kHz or 0Hz to send logic one o logic zero respectively.
- A 38kHz signal and the TXD of a second USART/UART could be used as a very simple transmitter. In the robot the TSOP33338 output could be connected to the RXD pin of a second USART/UART.
- A range of 1m to 2m is ok for this project.
- Wire the IR LED like an standard LED. Use 100Ω resistor in series.
- Your phone camera may be able to "see" the infrared light when the SFH 4546 is pulsing.

Copyright © 2012-2026, Jesus Calvino-Fraga. Not to be copied, used, or revised without explicit written permission from the copyright owner.

Obstacle Detection / Avoidance

- Use VL53L0X miniature Time-of-Flight (ToF) laser-ranging modules with a range of 3 cm to 2 m.
- Communicates using I2C. It is a pain to get going, but examples are provided in Canvas for all the microcontrollers!
- Check each microcontroller example for a wiring diagram and picture.

Copyright © 2012-2026, Jesus Calvino-Fraga. Not to be copied, used, or revised without explicit written permission from the copyright owner.

Example Wiring of VL53L0X

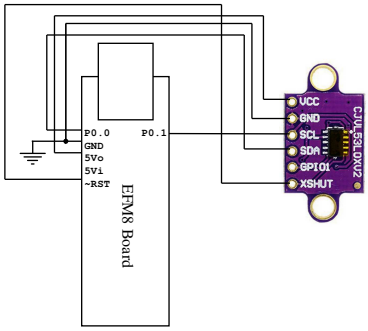

Copyright © 2012-2026, Jesus Calvino-Fraga. Not to be copied, used, or revised without explicit written permission from the copyright owner.

Example Wiring of VL53L0X

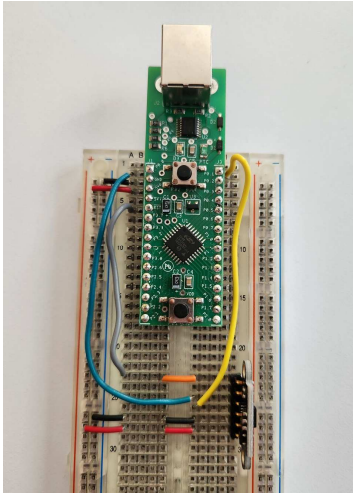

Copyright © 2012-2026, Jesus Calvino-Fraga. Not to be copied, used, or revised without explicit written permission from the copyright owner.

Robot Construction

Part #	Description
Solarbotics GM4 (or equivalent)	Gear Motor 4 - Clear Servo
3D printed wheels	2.63" x 0.35" (pair) wheels
Tamiya 70144	Ball Caster
4 x AA	Battery holder
1 x 9V cable	9V battery clip
Chassis	Aluminum chassis made using the water-jet cutter.

Copyright © 2012-2026, Jesus Calvino-Fraga. Not to be copied, used, or revised without explicit written permission from the copyright owner.

Robot Chassis

- One folded aluminum chassis in parts kit.
- Designed to fit a breadboard on top.
- You can use any other chassis.

Copyright © 2012-2026, Jesus Calvino-Fraga. Not to be copied, used, or revised without explicit written permission from the copyright owner.

C programmed.

- Both the robot and the guide wire controller must be programmed using the C programming language.
- You may ‘inline’ small portions of assembly code, but the bulk of your code must be C.
- Anything “Arduino” is not acceptable.

Copyright © 2012-2026, Jesus Calvino-Fraga. Not to be copied, used, or revised without explicit written permission from the copyright owner.

Battery powered.

- Your robot must be battery powered. This includes the electronics and motors.
- A 9 volt battery strap and a 4 x AA battery holder are included in the parts kit for this project.
- You can use any kind of batteries you want, provided that you acquire the batteries and the holders yourself.
- WARNING: batteries are neither included in the parts kits nor they will be provided in the lab. You must buy your own batteries.

Copyright © 2012-2026, Jesus Calvino-Fraga. Not to be copied, used, or revised without explicit written permission from the copyright owner.

Micro-controller System with USB and 9V Battery

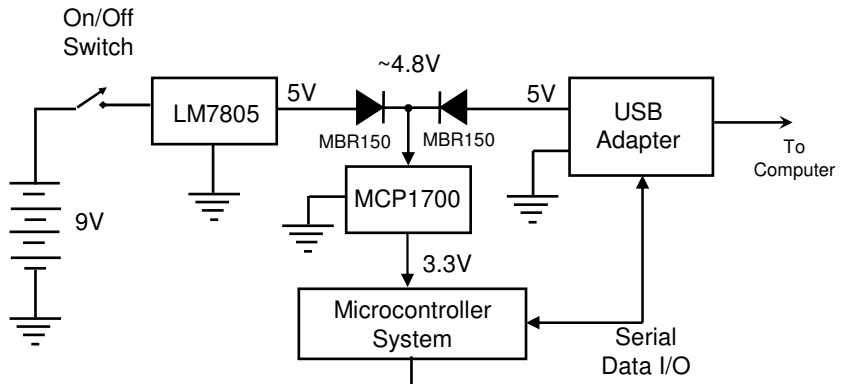

WARNING: Filtering and decoupling capacitors not shown. Check the LM7805 and MCP1700 datasheets for info about capacitors.

Note: Some microcontroller systems can work directly with 5V.

Copyright © 2012-2026, Jesus Calvino-Fraga. Not to be copied, used, or revised without explicit written permission from the copyright owner.

ROBOT block diagram

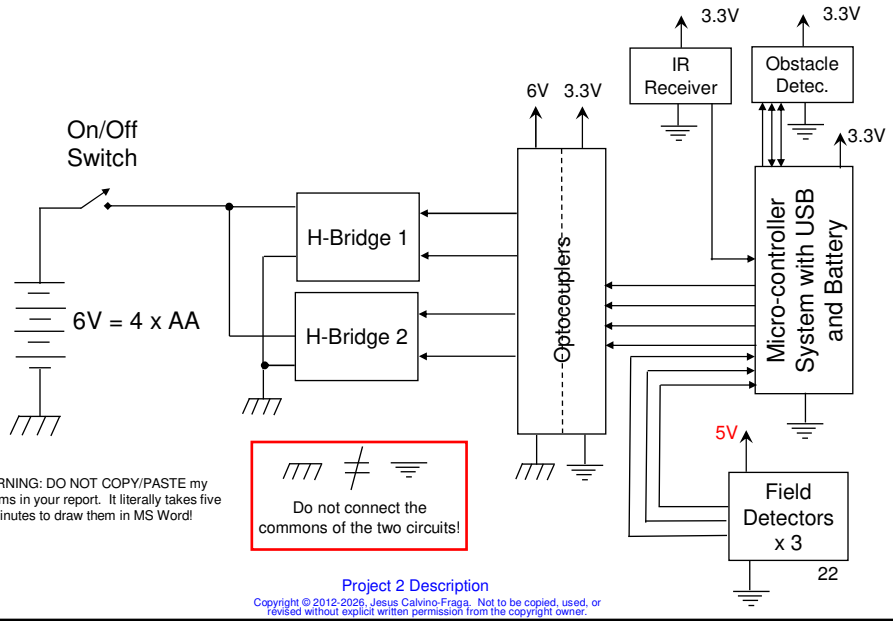

WARNING: DO NOT COPY/PASTE my diagrams in your report. It literally takes five minutes to draw them in MS Word!

Copyright © 2012-2026, Jesus Calvino-Fraga. Not to be copied, used, or revised without explicit written permission from the copyright owner.

H-Bridge with Optocouplers and MOSFETs

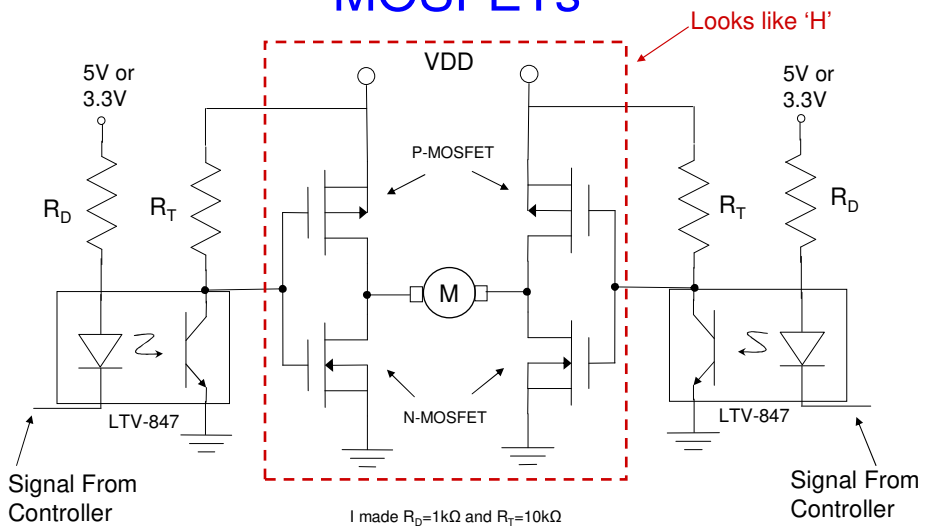

I made R_D=1kΩ and R_T=10kΩ

Copyright © 2012-2026, Jesus Calvino-Fraga. Not to be copied, used, or revised without explicit written permission from the copyright owner.

H-Bridge with Optocouplers and MOSFETs CW Rotation

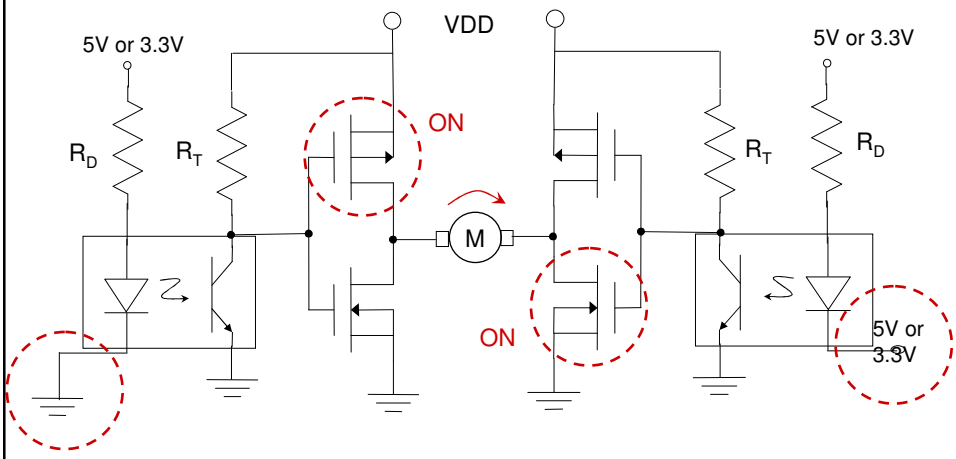

Copyright © 2012-2026, Jesus Calvino-Fraga. Not to be copied, used, or revised without explicit written permission from the copyright owner.

H-Bridge with Optocouplers and MOSFETs CCW Rotation

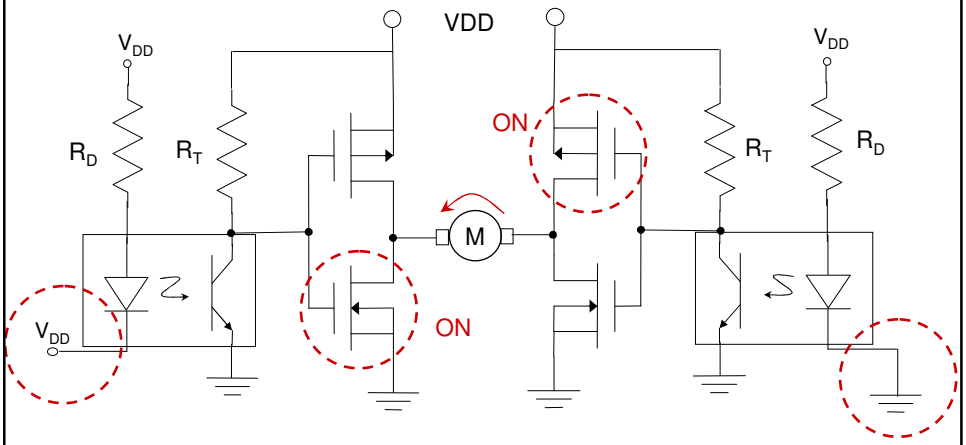

Copyright © 2012-2026, Jesus Calvino-Fraga. Not to be copied, used, or revised without explicit written permission from the copyright owner.

Optocouplers

- An optocoupler is a combination of a light source and a photosensitive element
- You can use an optocoupler when you want to isolate high or very high voltages, inductive circuits, or “noisy” circuits from the microcomputer system.
- The typical optocoupler consists of an infrared LED and a NPN BJT.
- The BJT usually doesn’t have a base pin! Instead it is the light from the LED what is used to saturate the transistor.

Copyright © 2012-2026, Jesus Calvino-Fraga. Not to be copied, used, or revised without explicit written permission from the copyright owner.

Designing with Optocouplers

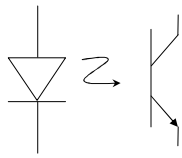

Some optocouplers include a base pin!

- When designing with optocouplers you take into consideration the following parameters:
  - The current transfer ratio (CTR) is a parameter similar to the DC current amplification ratio of a transistor (β) and is expressed as a percentage indicating the ratio of the output current (I_C) to the input current (I_F).
    $CTR(\%)=(I_C/I_F) \times 100$
  - The Diode forward voltage (1.2 to 1.4V).
  - The maximum diode forward current (around 50mA max).
  - The BJT saturation voltage (0.1 to 0.4V).
  - The voltage isolation between the diode and the transistors (a few hundred volts to thousands of volts)

Copyright © 2012-2026, Jesus Calvino-Fraga. Not to be copied, used, or revised without explicit written permission from the copyright owner.

Optocouplers circuits

$$R_1 = \frac{V_{CC} - V_F - V_{BE} - V_{CE(SAT)GATE}}{I_F}$$

$V_{BE(Q_1)} = 0.6$ V
$V_{CE(SAT)(G_1)} = 0.4$ V

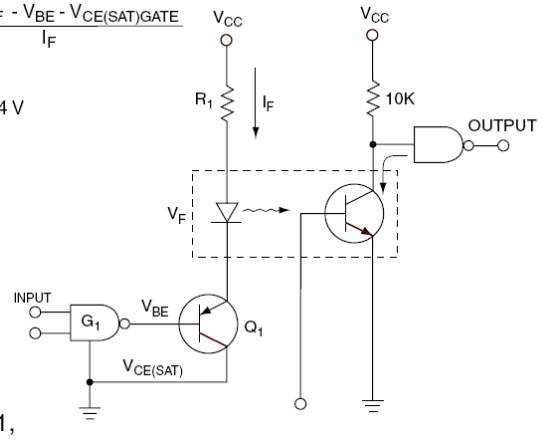

This is from AN-3001, Fairchild Semiconductors

Copyright © 2012-2026, Jesus Calvino-Fraga. Not to be copied, used, or revised without explicit written permission from the copyright owner.

LTV-846/LTV-847 Optocoupler

- CTR=50%
- Diode forward voltage=1.4 max.
- Maximum diode forward current is 50mA
- The BJT saturation voltage is less than 0.12V!
- Voltage isolation 5000V_{RMS}

Copyright © 2012-2026, Jesus Calvino-Fraga. Not to be copied, used, or revised without explicit written permission from the copyright owner.

Why you may need Optocouplers?

- To interface the low voltage of the microcontroller to the high voltage of the motors.
- To keep the 'noise' from the motors away from the microcontroller and the field detector circuit.

Copyright © 2012-2026, Jesus Calvino-Fraga. Not to be copied, used, or revised without explicit written permission from the copyright owner.

Remote block diagram

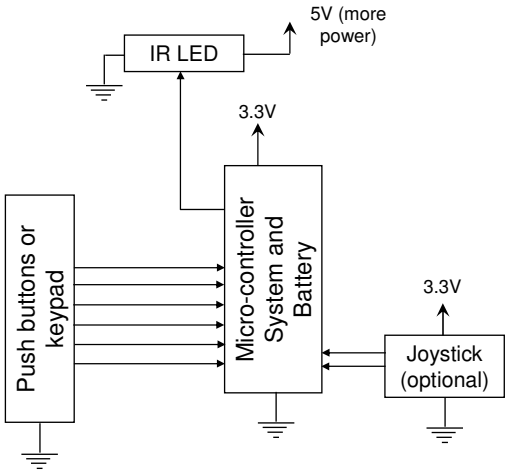

WARNING: DO NOT COPY/PASTE my diagrams in your report. It literally takes five minutes to draw them in MS Word!

Copyright © 2012-2026, Jesus Calvino-Fraga. Not to be copied, used, or revised without explicit written permission from the copyright owner.

Project 2 Due Dates

Function demo: April 1/2
Report and video: April 10

Copyright © 2012-2026, Jesus Calvino-Fraga. Not to be copied, used, or revised without explicit written permission from the copyright owner.