DETAILED SCHEMATICS

Trieu Truong

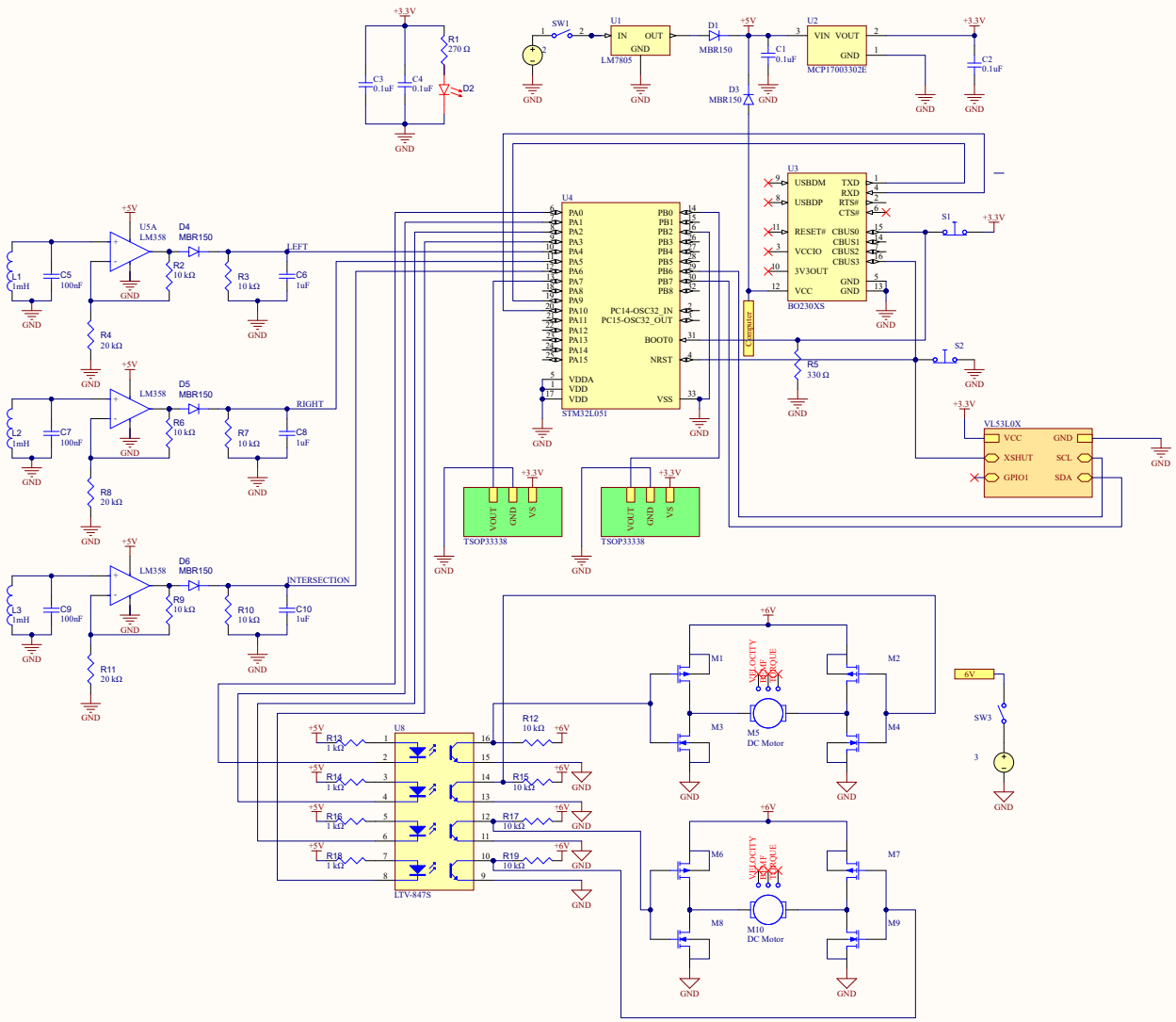

H-BRIDGE

Trieu Truong

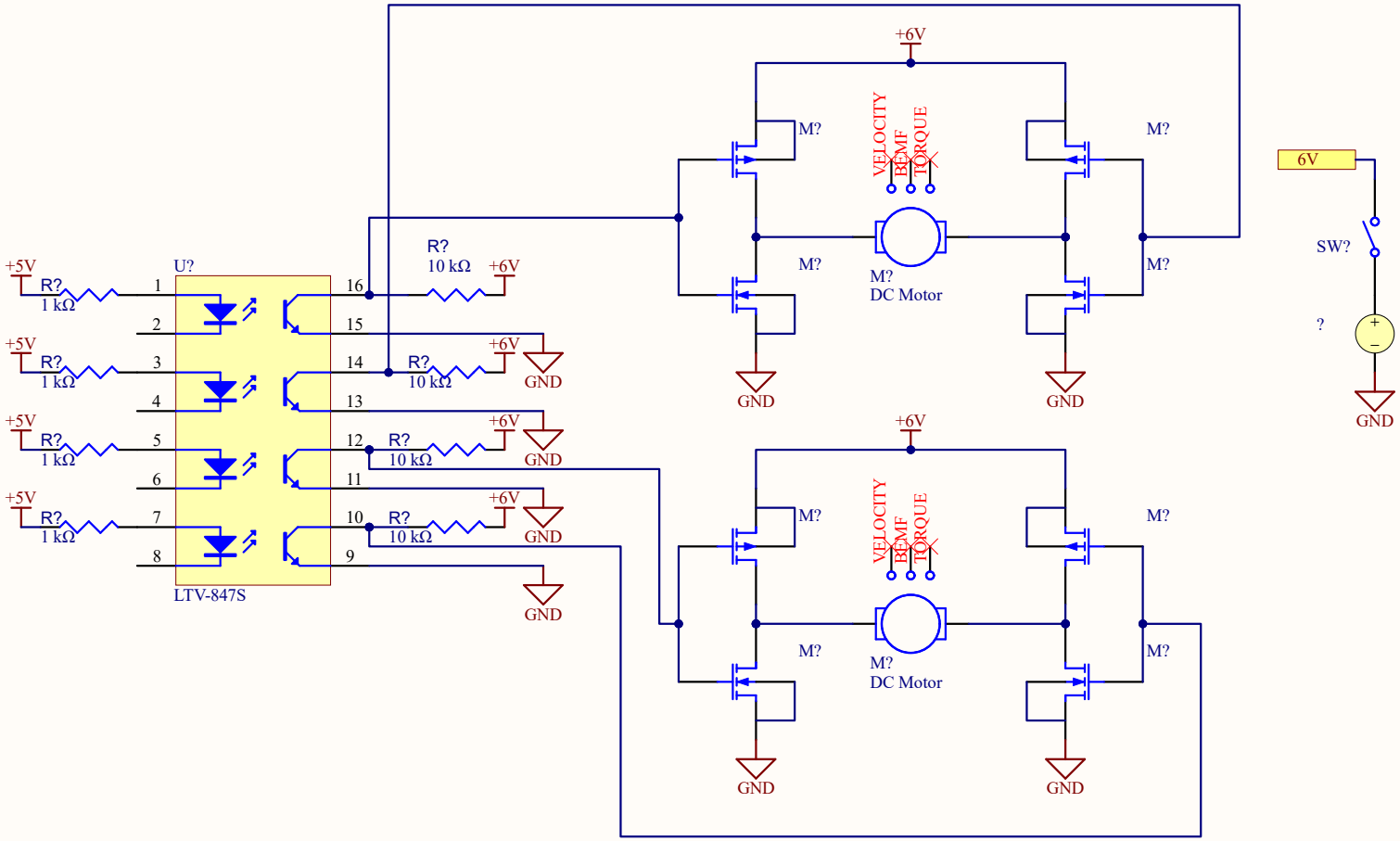

FIELD DETECTOR

Trieu Truong

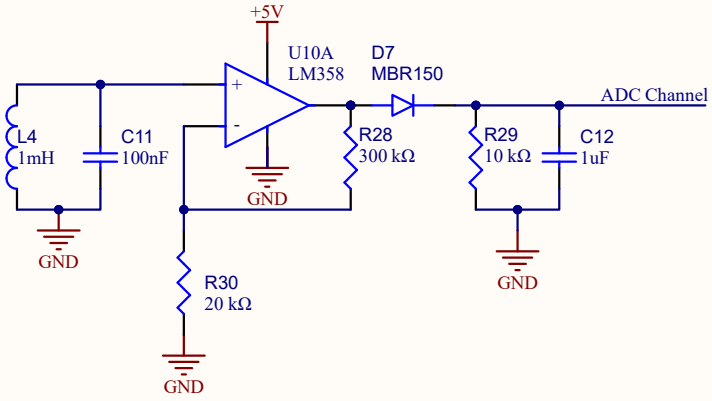

OBSTACLE DETECTOR

Trieu Truong

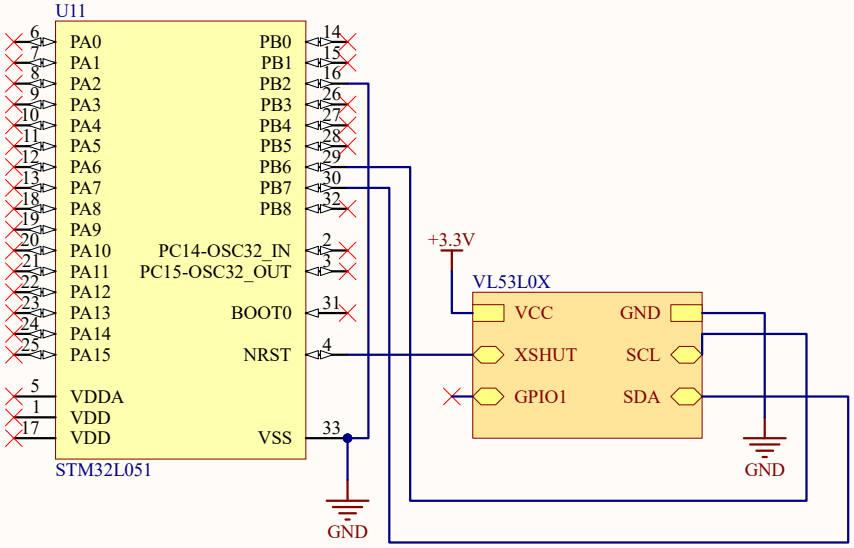

CONTROLLER
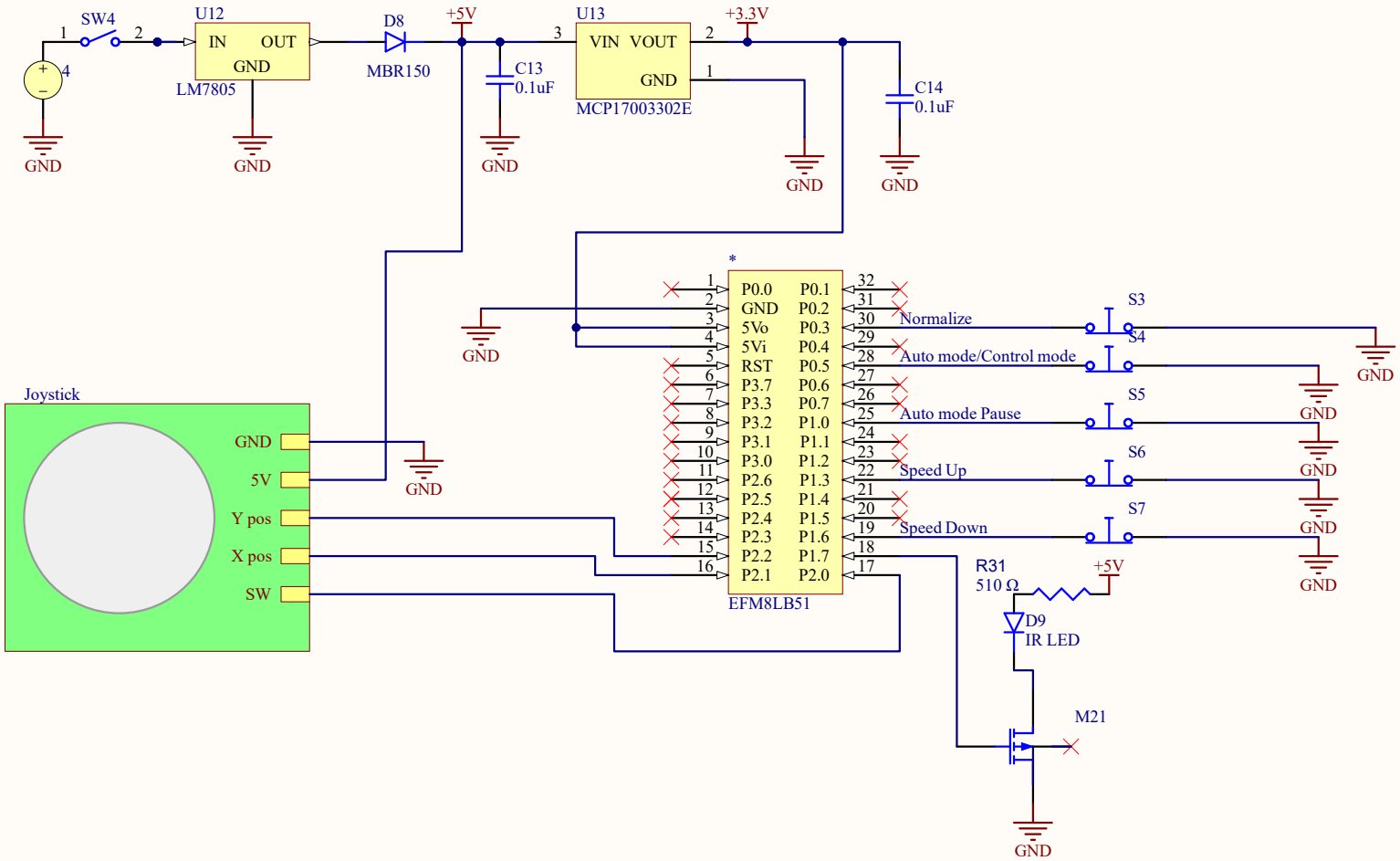
Trieu Truong