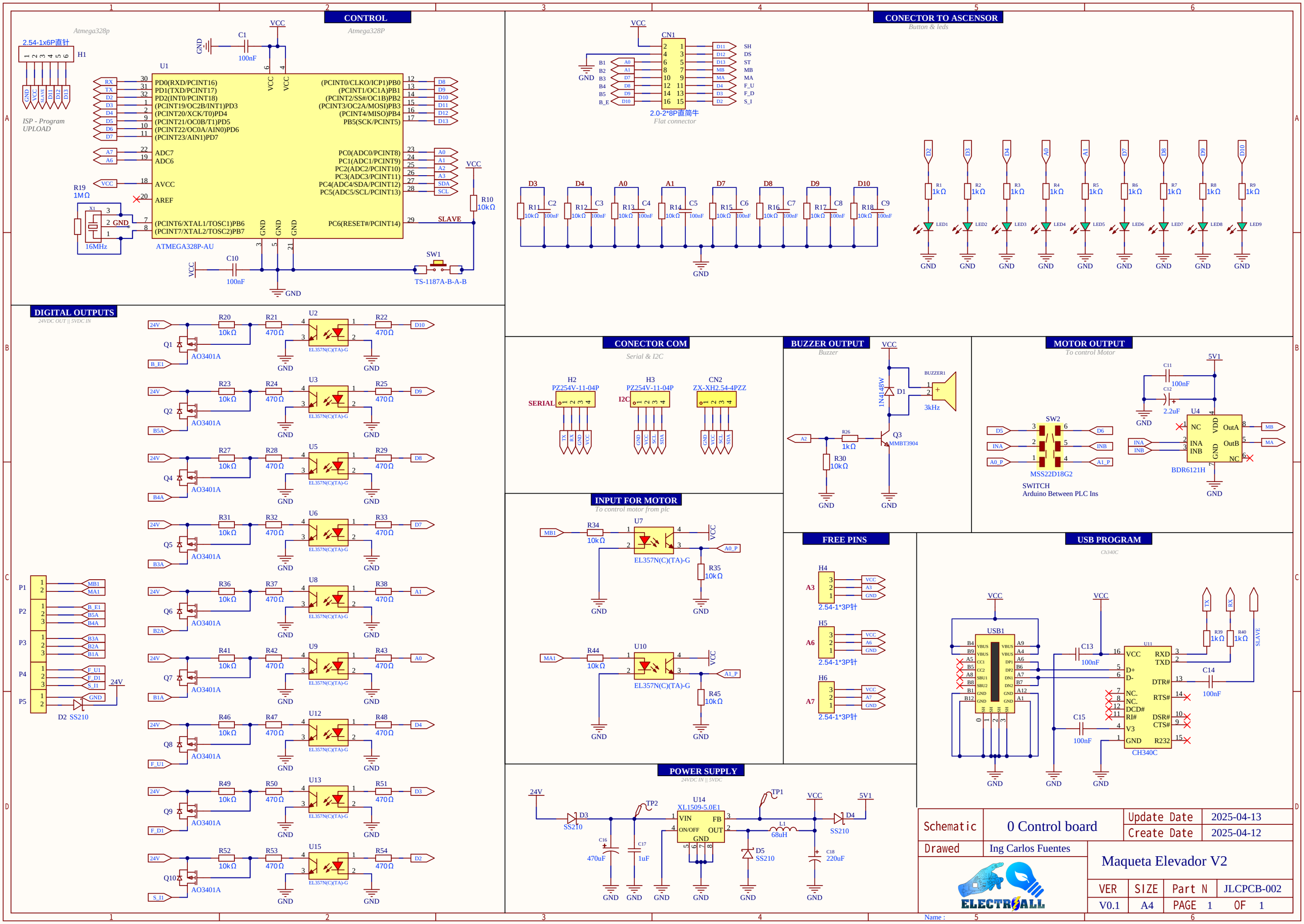
CONTROL
Atmega328p
Atmega328P
2.54-1x6P直针
H1
ISP - Program UPLOAD
U1
ATMEGA328P-AU
PD0(RXD/PCINT16)
PD1(TXD/PCINT17)
PD2(INT0/PCINT18)
(PCINT19/OC2B/INT1)PD3
(PCINT20/XCK/T0)PD4
(PCINT21/OC0B/T1)PD5
(PCINT22/OC0A/AIN0)PD6
(PCINT23/AIN1)PD7
ADC7
ADC6
AVCC
AREF
(PCINT6/XTAL1/TOSC1)PB6
(PCINT7/XTAL2/TOSC2)PB7
(PCINT0/CLKO/ICP1)PB0
(PCINT1/OC1A)PB1
(PCINT2/SS#/OC1B)PB2
(PCINT3/OC2A/MOSI)PB3
(PCINT4/MISO)PB4
PB5(SCK/PCINT5)
PC0(ADC0/PCINT8)
PC1(ADC1/PCINT9)
PC2(ADC2/PCINT10)
PC3(ADC3/PCINT11)
PC4(ADC4/SDA/PCINT12)
PC5(ADC5/SCL/PCINT13)
PC6(RESET#/PCINT14)
SLAVE
R19 1MΩ
16MHz
C1 100nF
C10 100nF
R10 10kΩ
SW1
TS-1187A-B-A-B
CONECTOR TO ASCENSOR
Button & leds
CN1
2.0-2*8P直简牛
Flat connector
SH
DS
ST
MB
MA
F_U
F_D
S_I
R11 10kΩ C2 100nF
R12 10kΩ C3 100nF
R13 10kΩ C4 100nF
R14 10kΩ C5 100nF
R15 10kΩ C6 100nF
R16 10kΩ C7 100nF
R17 10kΩ C8 100nF
R18 10kΩ C9 100nF
R1 1kΩ LED1
R2 1kΩ LED2
R3 1kΩ LED3
R4 1kΩ LED4
R5 1kΩ LED5
R6 1kΩ LED6
R7 1kΩ LED7
R8 1kΩ LED8
R9 1kΩ LED9
DIGITAL OUTPUTS
24VDC OUT || 5VDC IN
U2 R20 10kΩ R21 470Ω R22 470Ω D10 Q1 AO3401A B_E1
U3 R23 10kΩ R24 470Ω R25 470Ω D9 Q2 AO3401A B5A
U5 R27 10kΩ R28 470Ω R29 470Ω D8 Q4 AO3401A B4A
U6 R31 10kΩ R32 470Ω R33 470Ω D7 Q5 AO3401A B3A
U8 R36 10kΩ R37 470Ω R38 470Ω A1 Q6 AO3401A B2A
U9 R41 10kΩ R42 470Ω R43 470Ω A0 Q7 AO3401A B1A
U12 R46 10kΩ R47 470Ω R48 470Ω D4 Q8 AO3401A F_U1
U13 R49 10kΩ R50 470Ω R51 470Ω D3 Q9 AO3401A F_D1
U15 R52 10kΩ R53 470Ω R54 470Ω D2 Q10 AO3401A S_I1
EL357N(C)(TA)-G
P1 MB1 MA1
P2 B_E1 B5A B4A
P3 B3A B2A B1A
P4 F_U1 F_D1 S_I1
P5 GND
D2 SS210
CONECTOR COM
Serial & I2C
H2 PZ254V-11-04P SERIAL TX RX GND VCC
H3 PZ254V-11-04P I2C GND VCC SCL SDA
CN2 ZX-XH2.54-4PZZ GND VCC SCL SDA
BUZZER OUTPUT
Buzzer
BUZZER1 3kHz
1N4148W D1
R26 1kΩ R30 10kΩ Q3 MMBT3904
MOTOR OUTPUT
To control Motor
C11 100nF C12 2.2uF
5V1
U4 BDR6121H
NC OutA VDD OutB GND NC INA INB
SW2 MSS22D18G2
SWITCH
Arduino Between PLC Ins
INPUT FOR MOTOR
To control motor from plc
U7 R34 10kΩ R35 10kΩ A0_P
U10 R44 10kΩ R45 10kΩ A1_P
FREE PINS
H4 A3 2.54-1*3P针
H5 A6 2.54-1*3P针
H6 A7 2.54-1*3P针
USB PROGRAM
Ch340C
USB1
U11 CH340C
VCC RXD TXD DTR# RTS# DSR# CTS# R232 V3 GND NC. DCD# RI#
C13 100nF C14 100nF C15 100nF
R39 1kΩ R40 1kΩ
POWER SUPPLY
24VDC IN || 5VDC
U14 XL1509-5.0E1
VIN FB ON/OFF OUT GND
D3 SS210 D4 SS210 D5 SS210
C16 470uF C17 1uF C18 220uF
L1 68uH
TP1 TP2
Schematic
0 Control board
Update Date 2025-04-13
Create Date 2025-04-12
Drawed
Ing Carlos Fuentes
Maqueta Elevador V2
ELECTROALL
VER V0.1
SIZE A4
Part N JLCPCB-002
PAGE 1 OF 1
Name :