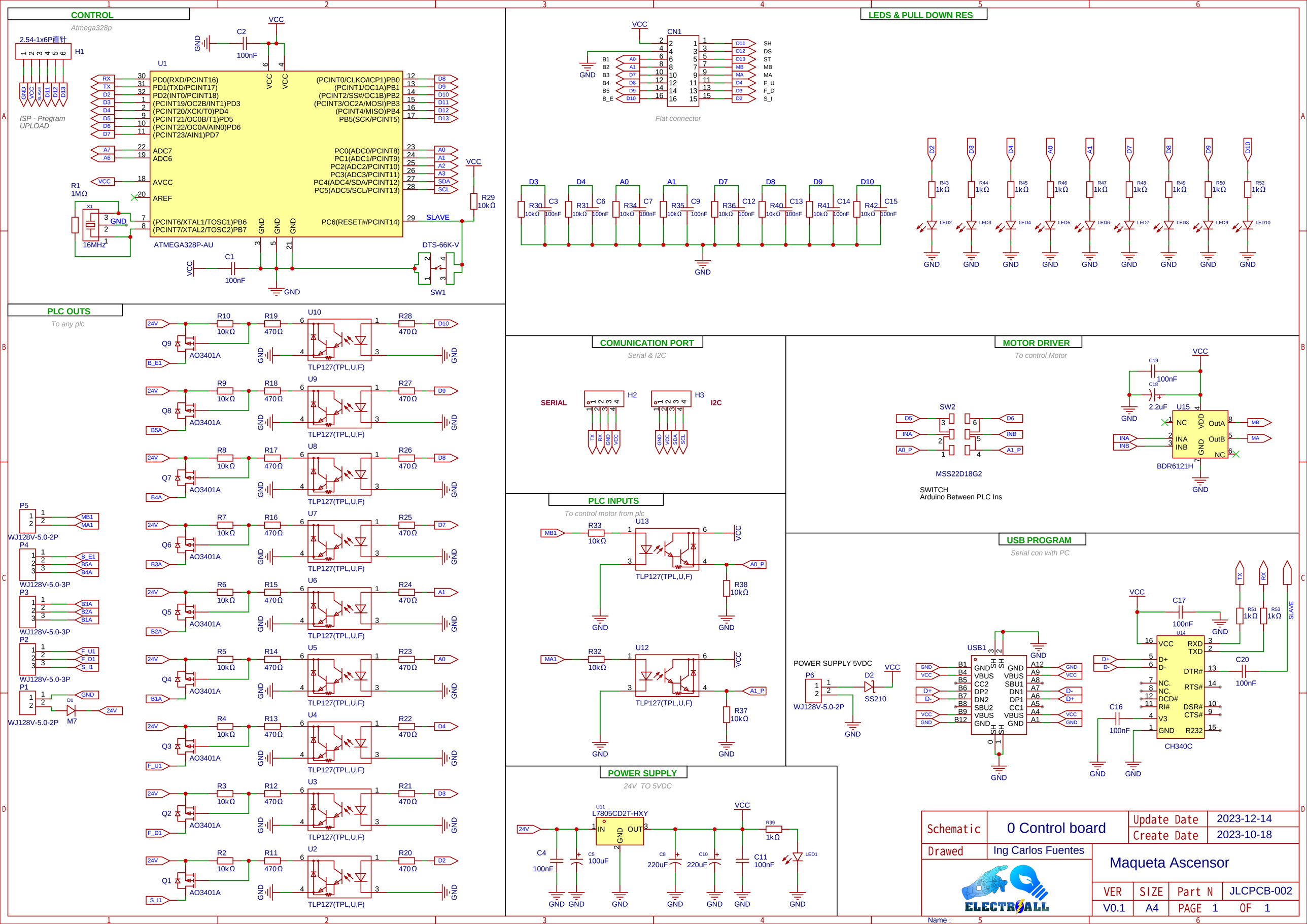
CONTROL
Atmega328p
2.54-1x6P直针
H1
ISP - Program UPLOAD
U1
ATMEGA328P-AU
PD0(RXD/PCINT16)
PD1(TXD/PCINT17)
PD2(INT0/PCINT18)
(PCINT19/OC2B/INT1)PD3
(PCINT20/XCK/T0)PD4
(PCINT21/OC0B/T1)PD5
(PCINT22/OC0A/AIN0)PD6
(PCINT23/AIN1)PD7
ADC7
ADC6
AVCC
AREF
(PCINT6/XTAL1/TOSC1)PB6
(PCINT7/XTAL2/TOSC2)PB7
(PCINT0/CLKO/ICP1)PB0
(PCINT1/OC1A)PB1
(PCINT2/SS#/OC1B)PB2
(PCINT3/OC2A/MOSI)PB3
(PCINT4/MISO)PB4
PB5(SCK/PCINT5)
PC0(ADC0/PCINT8)
PC1(ADC1/PCINT9)
PC2(ADC2/PCINT10)
PC3(ADC3/PCINT11)
PC4(ADC4/SDA/PCINT12)
PC5(ADC5/SCL/PCINT13)
PC6(RESET#/PCINT14)
SLAVE
R1 1MΩ
16MHz
C1 100nF
C2 100nF
R29 10kΩ
DTS-66K-V
SW1
LEDS & PULL DOWN RES
CN1
Flat connector
SH
DS
ST
MB
MA
F_U
F_D
S_I
R30 10kΩ C3 100nF
R31 10kΩ C6 100nF
R34 10kΩ C7 100nF
R35 10kΩ C9 100nF
R36 10kΩ C12 100nF
R40 10kΩ C13 100nF
R41 10kΩ C14 100nF
R42 10kΩ C15 100nF
R43 1kΩ LED2
R44 1kΩ LED3
R45 1kΩ LED4
R46 1kΩ LED5
R47 1kΩ LED6
R48 1kΩ LED7
R49 1kΩ LED8
R50 1kΩ LED9
R52 1kΩ LED10
PLC OUTS
To any plc
Q9 AO3401A B_E1 R10 10kΩ R19 470Ω U10 TLP127(TPL,U,F) R28 470Ω D10
Q8 AO3401A B5A R9 10kΩ R18 470Ω U9 TLP127(TPL,U,F) R27 470Ω D9
Q7 AO3401A B4A R8 10kΩ R17 470Ω U8 TLP127(TPL,U,F) R26 470Ω D8
Q6 AO3401A B3A R7 10kΩ R16 470Ω U7 TLP127(TPL,U,F) R25 470Ω D7
Q5 AO3401A B2A R6 10kΩ R15 470Ω U6 TLP127(TPL,U,F) R24 470Ω A1
Q4 AO3401A B1A R5 10kΩ R14 470Ω U5 TLP127(TPL,U,F) R23 470Ω A0
Q3 AO3401A F_U1 R4 10kΩ R13 470Ω U4 TLP127(TPL,U,F) R22 470Ω D4
Q2 AO3401A F_D1 R3 10kΩ R12 470Ω U3 TLP127(TPL,U,F) R21 470Ω D3
Q1 AO3401A S_I1 R2 10kΩ R11 470Ω U2 TLP127(TPL,U,F) R20 470Ω D2
P5 WJ128V-5.0-2P MB1 MA1
P4 WJ128V-5.0-3P B_E1 B5A B4A
P3 WJ128V-5.0-3P B3A B2A B1A
P2 WJ128V-5.0-3P F_U1 F_D1 S_I1
P1 WJ128V-5.0-2P GND 24V D1 M7
COMUNICATION PORT
Serial & I2C
SERIAL H2 TX RX GND VCC
H3 I2C GND VCC SDA SCL
PLC INPUTS
To control motor from plc
MB1 R33 10kΩ U13 TLP127(TPL,U,F) R38 10kΩ A0_P
MA1 R32 10kΩ U12 TLP127(TPL,U,F) R37 10kΩ A1_P
POWER SUPPLY
24V TO 5VDC
U11 L7805CD2T-HXY IN OUT GND
C4 100nF C5 100uF C8 220uF C10 220uF C11 100nF R39 1kΩ LED1
MOTOR DRIVER
To control Motor
SW2 MSS22D18G2
SWITCH Arduino Between PLC Ins
C19 100nF C18 2.2uF U15 BDR6121H NC VDD OutA OutB GND INA INB
USB PROGRAM
Serial con with PC
POWER SUPPLY 5VDC P6 WJ128V-5.0-2P D2 SS210
USB1
C17 100nF R51 1kΩ R53 1kΩ C20 100nF C16 100nF
U14 CH340C VCC RXD TXD DTR# RTS# DSR# CTS# V3 GND R232 NC. DCD# RI#
Schematic
0 Control board
Update Date 2023-12-14
Create Date 2023-10-18
Drawed Ing Carlos Fuentes
Maqueta Ascensor
ELECTROALL
VER V0.1
SIZE A4
Part N JLCPCB-002
PAGE 1 OF 1
Name :