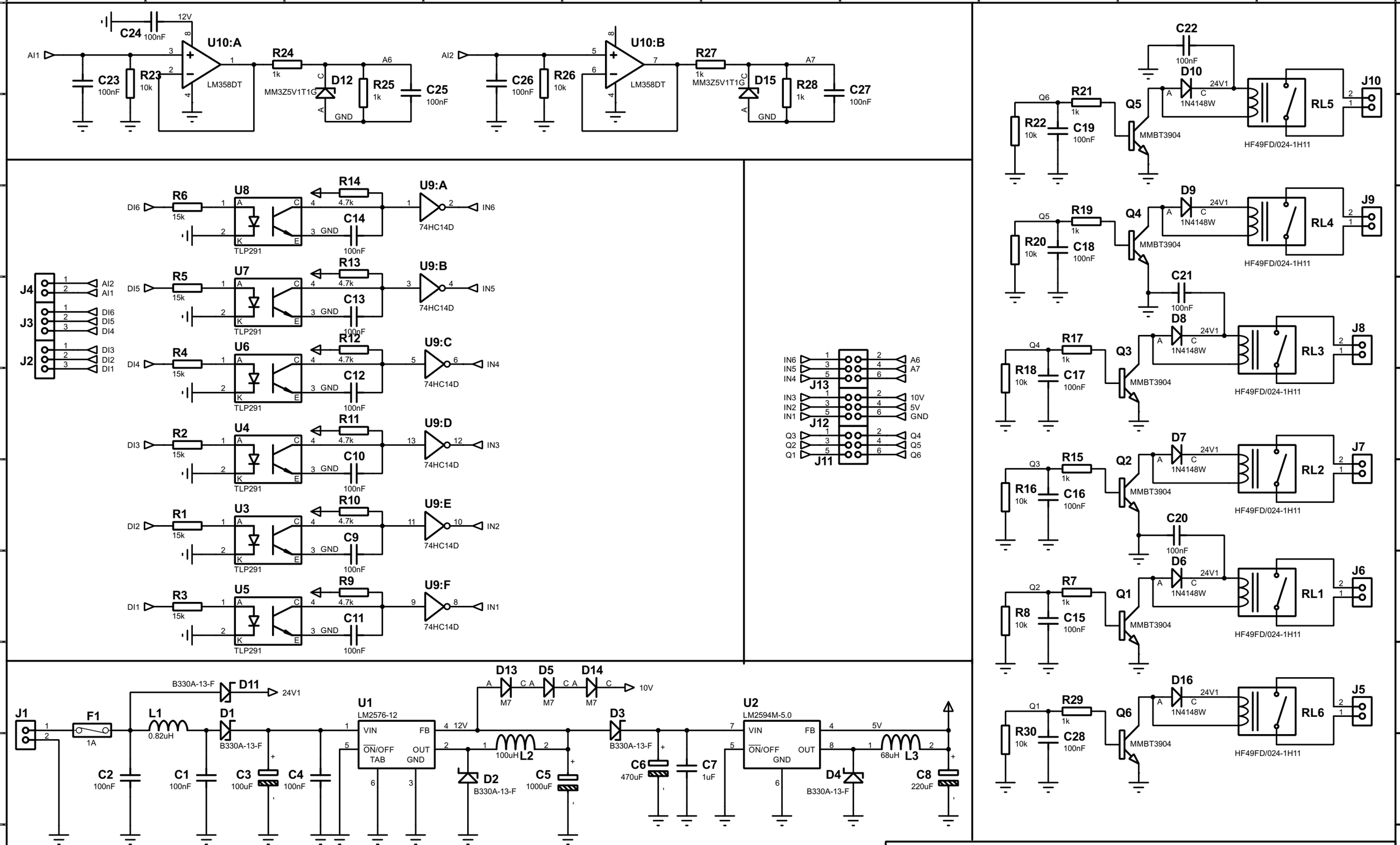

TITLE: *power supply - inputs - outputs*		CODE: PLC01.1
DESIGN By: *Carlos Fuentes*	REV: V2.1	SIZE: A3
PAGE: 1 / 1	DATE: 6/09/2023	TIME: 9:08:23